Tolerances (10 h)

UPenAUTO : 2017-1-ES01-KA203-03858

Erasmus+

UPenAUTO: UPSKILLED ENGINEERING PROFILES FOR THE AUTOMOTIVE SECTOR AND UPTAKE OF ALTERNATE SCHEME IN EUROPE´S HIGHER EDUCATION.

Gestamp

GTI
GESTAMP TECHNOLOGY INSTITUTE

FABRIKAZIOAREN ZENTRO AURRERATUA
CENTRO AVANZADO DE FABRICACIÓN

somorrostro
centro de formación / irakas-gunea

UNIVERSITATEA POLITEHNICA

Content

1. Introduction to tolerances
2. Dimensional tolerances
3. Surface roughness
4. Geometrical tolerances

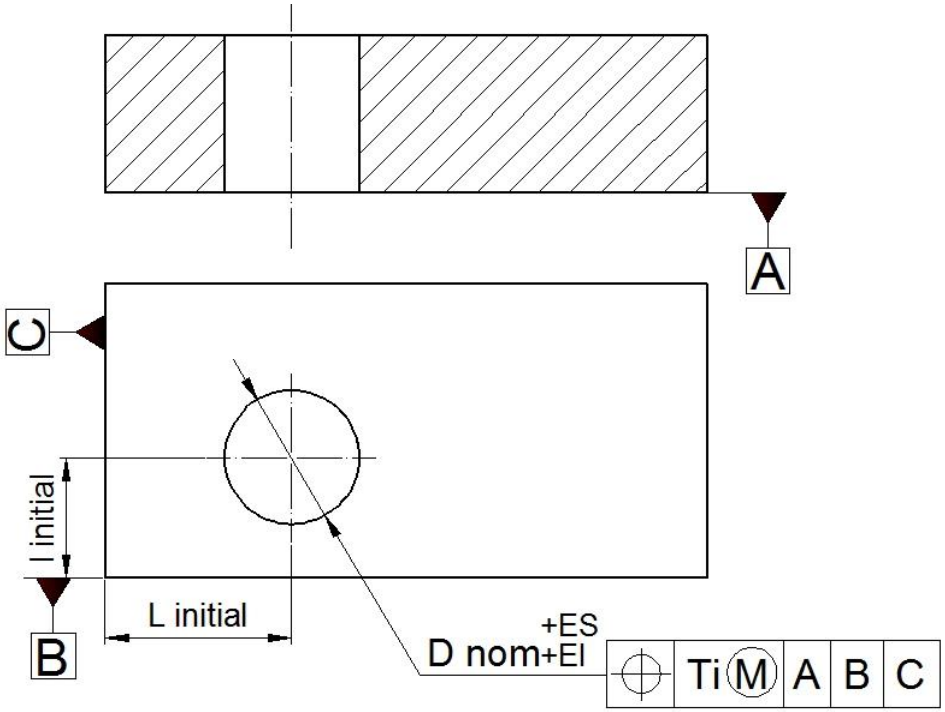

1. Introduction to tolerances

- What are the products' tolerances?
- The Importance of Tolerance, Interchangeability
- Case review

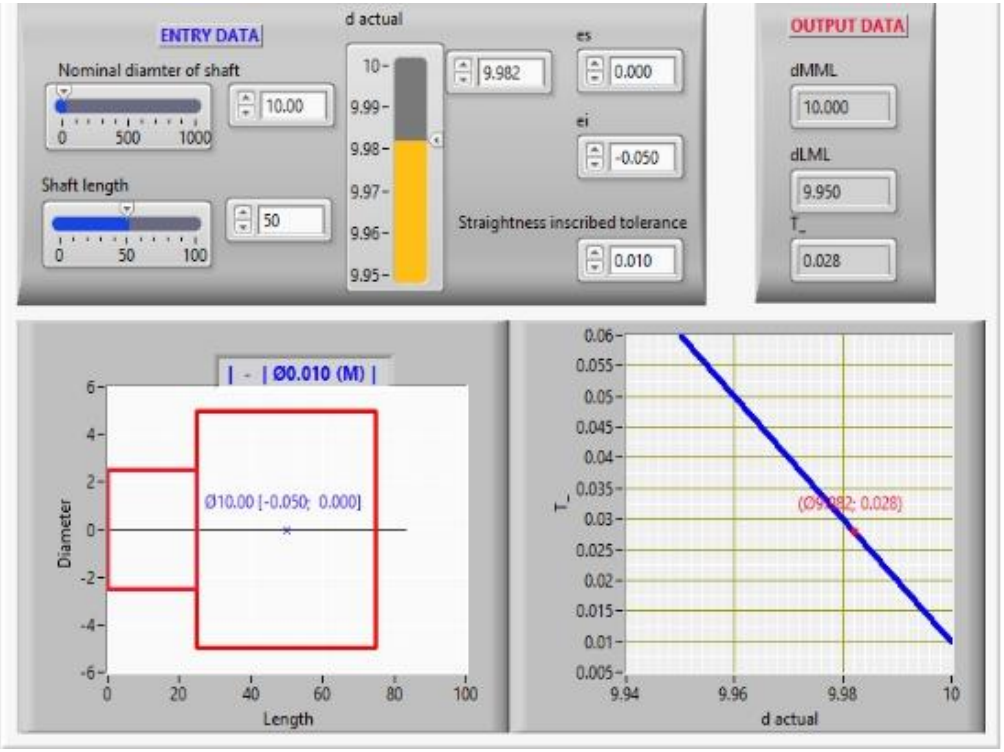

What are the products' tolerances?

Tolerance is the acceptable range for a physical dimension, which is determined by the product designer based on the shape, fit and function of a part [1].

Tolerance limits - specified values of the characteristic giving upper and/or lower bounds of the permissible value.

Tolerance interval - variable values of the size between and including the tolerance limits.

Tolerance class - shall be designated by the combination of an upper-case letter(s) for holes and lowercase letters for shafts identifying the fundamental deviation and by the number representing the standard tolerance grade. Ex. H6 (holes), h6 (shafts).

Product tolerance

- ✓ The tolerance is an absolute quantity without sign.
- ✓ The lower the tolerance of the feature is, the bigger its prescribed precision will be!

The precision of a feature is a term representing the consistency level between a feature that is at a certain development stage and its nominal or standard feature [1].

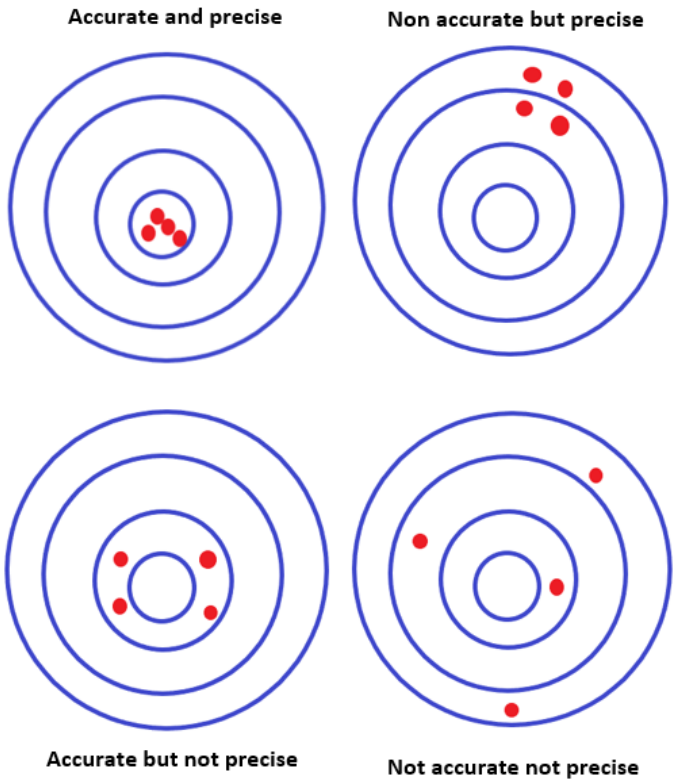

International Tolerance grades

The general applications of International Tolerance (IT) grades [2]:

Nominal size mm		Standard tolerance grades																			
		IT01	IT0	IT1	IT2	IT3	IT4	IT5	IT6	IT7	IT8	IT9	IT10	IT11	IT12	IT13	IT14	IT15	IT16	IT17	IT18
Above	Up to and inclu-ding	Standard tolerance values																			
		µm													mm						
—	3	0,3	0,5	0,8	1,2	2	3	4	6	10	14	25	40	60	0,1	0,14	0,25	0,4	0,6	1	1,4
3	6	0,4	0,6	1	1,5	2,5	4	5	8	12	18	30	48	75	0,12	0,18	0,3	0,48	0,75	1,2	1,8
6	10	0,4	0,6	1	1,5	2,5	4	6	9	15	22	36	58	90	0,15	0,22	0,36	0,58	0,9	1,5	2,2
10	18	0,5	0,8	1,2	2	3	5	8	11	18	27	43	70	110	0,18	0,27	0,43	0,7	1,1	1,8	2,7
18	30	0,6	1	1,5	2,5	4	6	9	13	21	33	52	84	130	0,21	0,33	0,52	0,84	1,3	2,1	3,3
30	50	0,6	1	1,5	2,5	4	7	11	16	25	39	62	100	160	0,25	0,39	0,62	1	1,6	2,5	3,9
50	80	0,8	1,2	2	3	5	8	13	19	30	46	74	120	190	0,3	0,46	0,74	1,2	1,9	3	4,6
80	120	1	1,5	2,5	4	6	10	15	22	35	54	87	140	220	0,35	0,54	0,87	1,4	2,2	3,5	5,4
120	180	1,2	2	3,5	5	8	12	18	25	40	63	100	160	250	0,4	0,63	1	1,6	2,5	4	6,3
180	250	2	3	4,5	7	10	14	20	29	46	72	115	185	290	0,46	0,72	1,15	1,85	2,9	4,6	7,2
250	315	2,5	4	6	8	12	16	23	32	52	81	130	210	320	0,52	0,81	1,3	2,1	3,2	5,2	8,1
315	400	3	5	7	9	13	18	25	36	57	89	140	230	360	0,57	0,89	1,4	2,3	3,6	5,7	8,9
400	500	4	6	8	10	15	20	27	40	63	97	155	250	400	0,63	0,97	1,55	2,5	4	6,3	9,7
500	630			9	11	16	22	32	44	70	110	175	280	440	0,7	1,1	1,75	2,8	4,4	7	11
630	800			10	13	18	25	36	50	80	125	200	320	500	0,8	1,25	2	3,2	5	8	12,5
800	1 000			11	15	21	28	40	56	90	140	230	360	560	0,9	1,4	2,3	3,6	5,6	9	14
1 000	1 250			13	18	24	33	47	66	105	165	260	420	660	1,05	1,65	2,6	4,2	6,6	10,5	16,5
1 250	1 600			15	21	29	39	55	78	125	195	310	500	780	1,25	1,95	3,1	5	7,8	12,5	19,5
1 600	2 000			18	25	35	46	65	92	150	230	370	600	920	1,5	2,3	3,7	6	9,2	15	23
2 000	2 500			22	30	41	55	78	110	175	280	440	700	1 100	1,75	2,8	4,4	7	11	17,5	28
2 500	3 150			26	36	50	68	96	135	210	330	540	860	1 350	2,1	3,3	5,4	8,6	13,5	21	33

The Importance of Tolerance, Interchangeability

Interchangeable components are components that are for identical purposes.

The advantages of interchangeable manufacturing include the following [3]:

- ✓ It makes possible the standardization of products and methods of manufacturing.
- ✓ It provides for ease of assembly and maintenance of products.
- ✓ It allows mass production of products thus making it possible to take advantage of economics of scale in terms of manufacturing costs and cost of raw materials etc.
- ✓ Because of larger volume of production, specialized processes and machines can be employed thus reducing manufacturing time and cost per piece.
- ✓ Mass production enables the manufacturing setups to acquire a certain degree of specialization and skill of fabrication which again leads to better quality and lower costs.

Case review

The tolerance (T_F) of a feature is the difference between the upper limit of the feature (F_{max}) and lower limit of the feature (F_{min}).

$T_F = F_{max} - F_{min}$

$d_{max} = 10$ mm

$d_{min} = 9.95$ mm

$T_F = d_{max} - d_{min}$

$T_F = 10$ mm $- 9.95$ mm

$T_F = 0.05$ mm

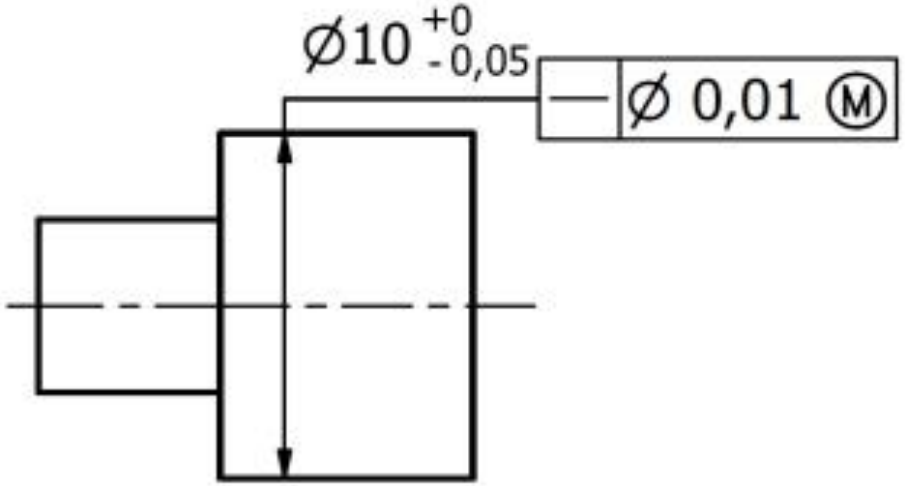

2. Dimensional tolerances

- Definition
- Symbology
- Hole Basis Tolerance System
  or Shaft Basis Tolerance System
- Application

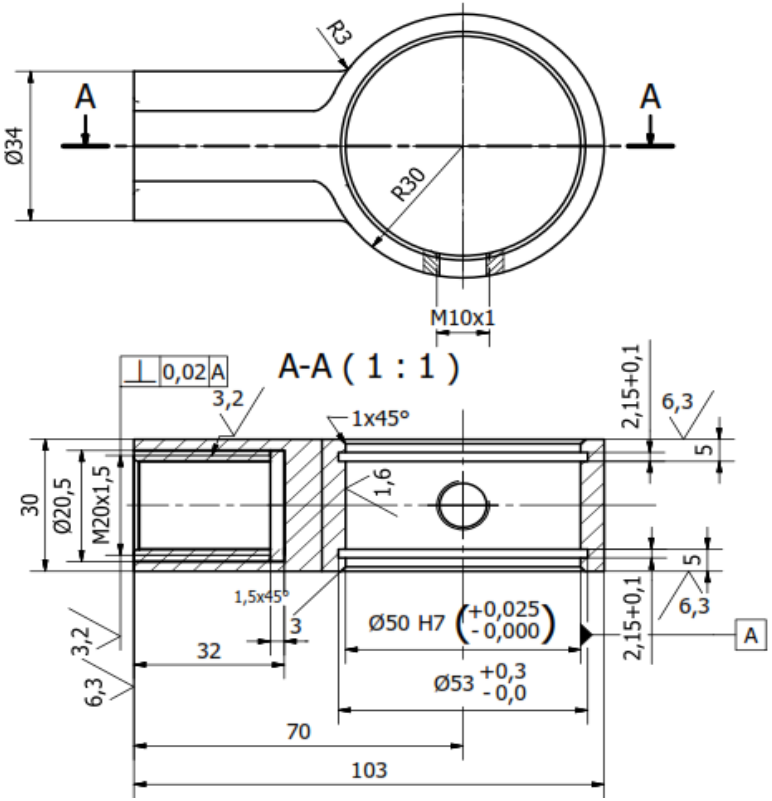

Definitions

According to the standard SR EN ISO 286-1: 2010/AC2013

Nominal size - size of a feature of perfect form as defined by the drawing specification.

Actual size - size of the associated integral feature.

Limits of size - extreme permissible sizes of a feature of size.

- **Upper limit of size -** largest permissible size of a feature of size.
- **Lower limit of size -** smallest permissible size of a feature of size.

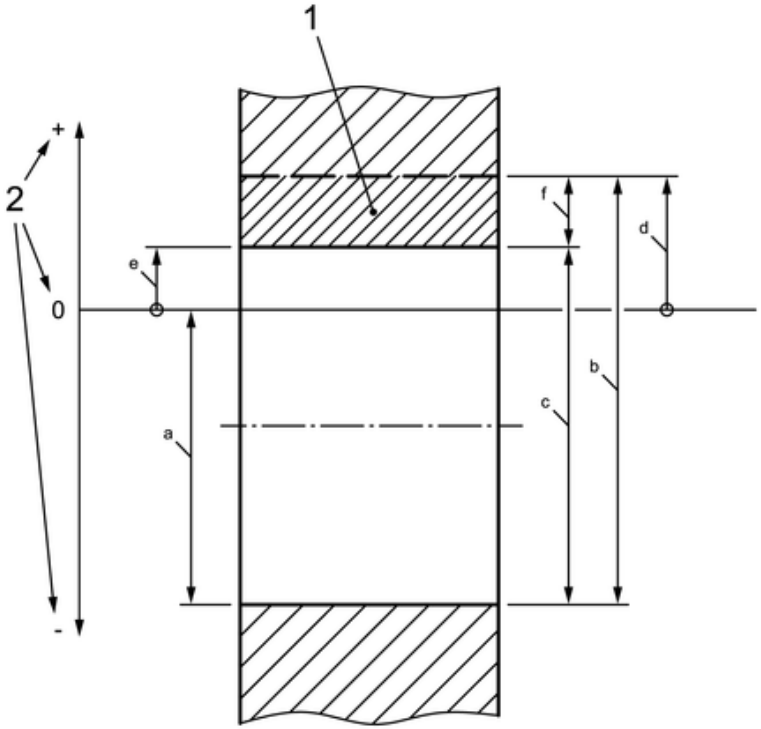

1 tolerance interval
2 sign convention for deviations
[a] Nominal size.
[b] Upper limit of size.
[c] Lower limit of size.
[d] Upper limit deviation.
[e] Lower limit deviation.
[f] Tolerance.

Symbology

A feature of size may be toleranced by using the ISO code system defined of ISO 286 or by using + and − tolerancing according to ISO 14405-1.

Both indications are equivalent [2].

ISO 286		ISO 14405-1
32 H7	≡	$32^{+0,025}_{0}$
80 js15	≡	$80 \pm 0,6$
100 g6 Ⓔ	≡	$100^{-0,012}_{-0,034}$ Ⓔ

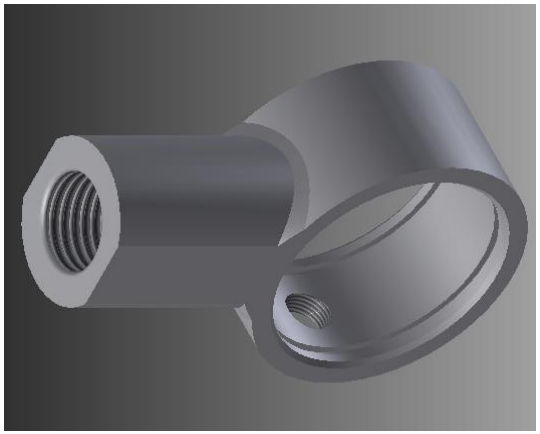

Hole and Shaft Basis Tolerance System

Hole: internal feature of size of a workpiece, including internal features of size which are not cylindrical [2]

Shaft: external feature of size of a workpiece, including external features of size which are not cylindrical [2].

Fit: relationship between an external feature of size and an internal feature of size (the hole and shaft of the same type) which are to be assembled [2]

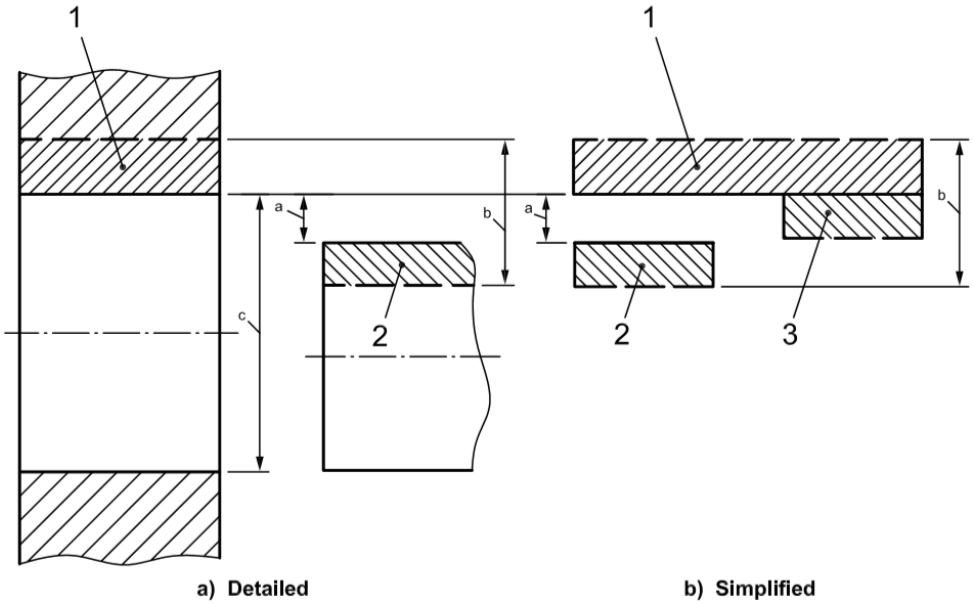

1 tolerance interval of the hole
2 tolerance interval of the shaft, case 1: when the upper limit of size of the shaft is lower than the lower limit of size of the hole, the minimum clearance is larger than zero
3 tolerance interval of the shaft, case 2: when the upper limit of size of the shaft is identical to the lower limit of size of the hole, the minimum clearance is zero
a Minimum clearance.
b Maximum clearance.
c Nominal size = lower limit of size of the hole.

Illustration of definitions of a clearance fit (nominal model) [2]

Illustration of definitions of an interference fit (nominal model) [2]

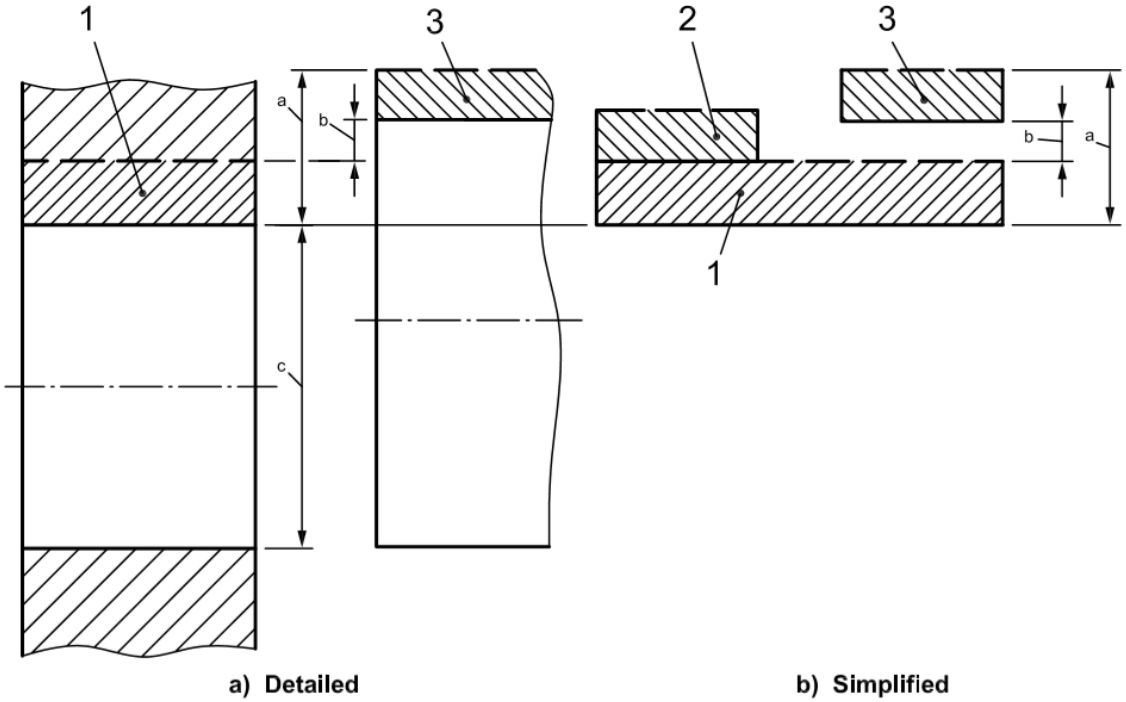

1 tolerance interval of the hole
2 tolerance interval of the shaft, case 1: when the lower limit of size of the shaft is identical to the upper limit of size of the hole, the minimum interference is zero
3 tolerance interval of the shaft, case 2: when the lower limit of size of the shaft is larger than the upper limit of size of the hole, the minimum interference is larger than zero
a Maximum interference.
b Minimum interference.
c Nominal size = lower limit of size of the hole.

Illustration of definitions of a transition fit (nominal model) [2]

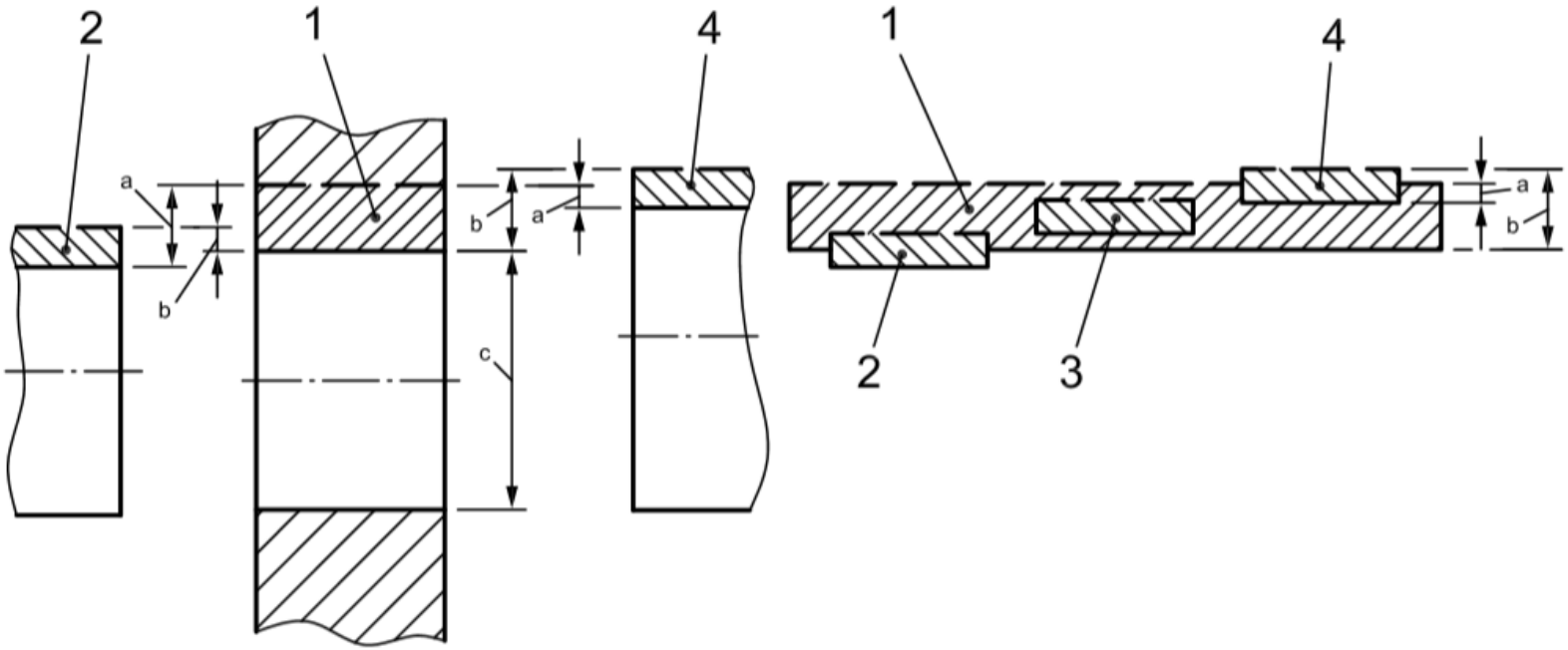

a) Detailed

b) Simplified

1 tolerance interval of the hole
2-4 tolerance interval of the shaft (some possible placements are shown)
a Maximum clearance.
b Maximum interference.
c Nominal size = lower limit of size of the hole.

Hole-basis fit system [2]

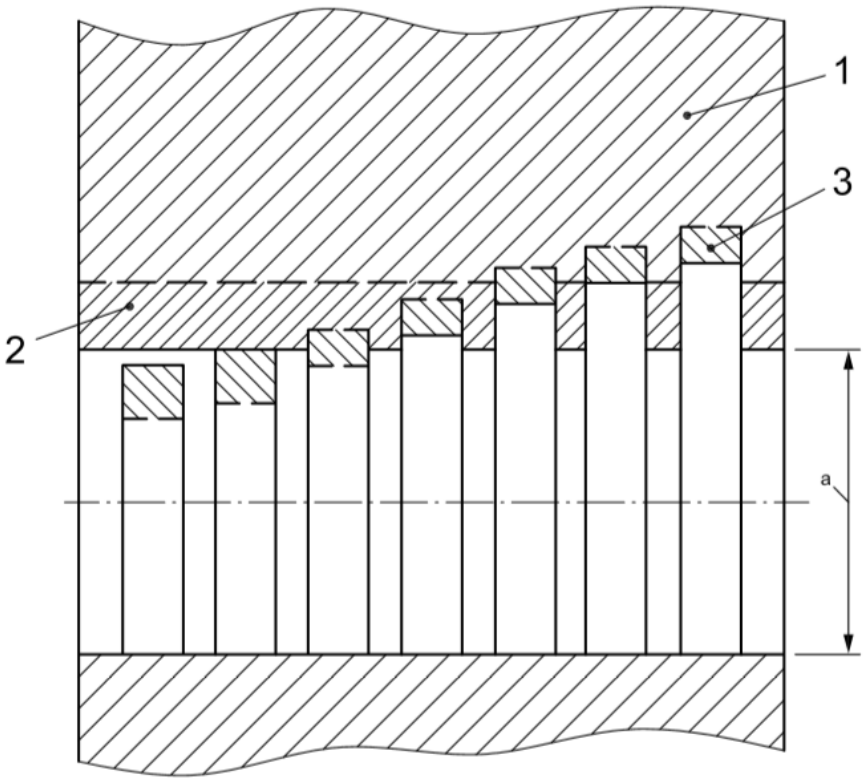

1 basic hole “H”
2 tolerance interval of the basic hole
3 tolerance interval of the different shafts
a Nominal size.

Shaft-basis fit system [2]

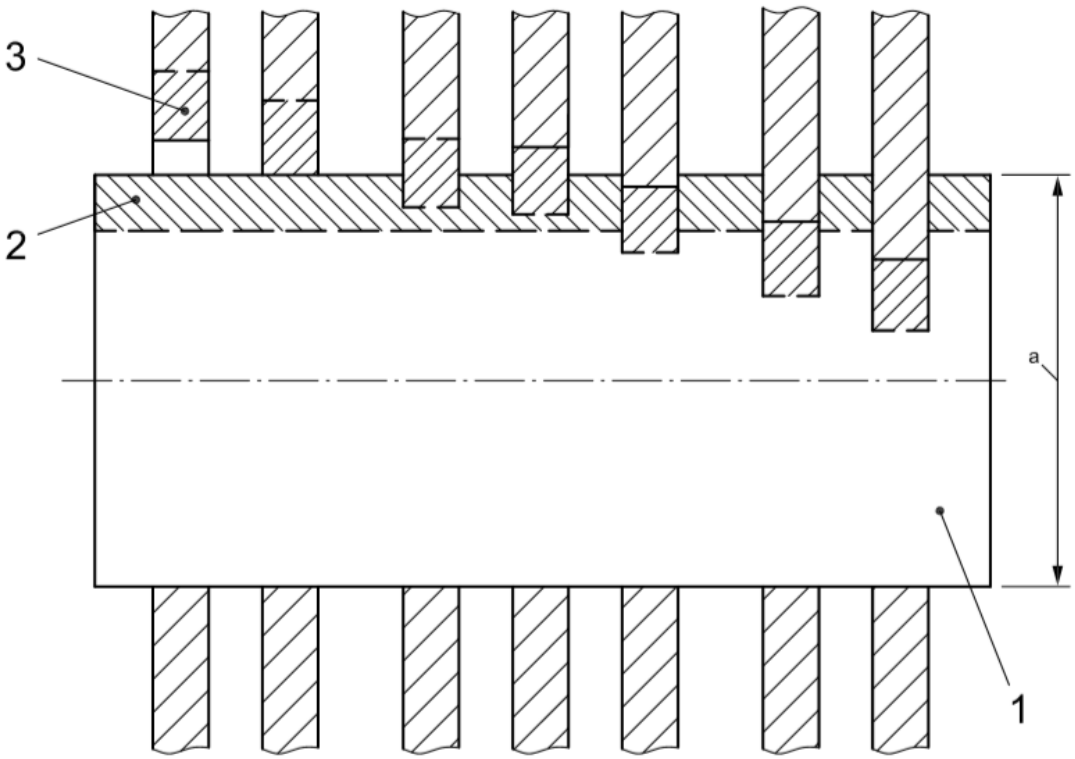

1 basic shaft “h”
2 tolerance interval of the basic shaft
3 tolerance interval of the different holes
a Nominal size.

Schematic representation of the placement of the tolerance interval (fundamental deviation) relative to the nominal size [2]

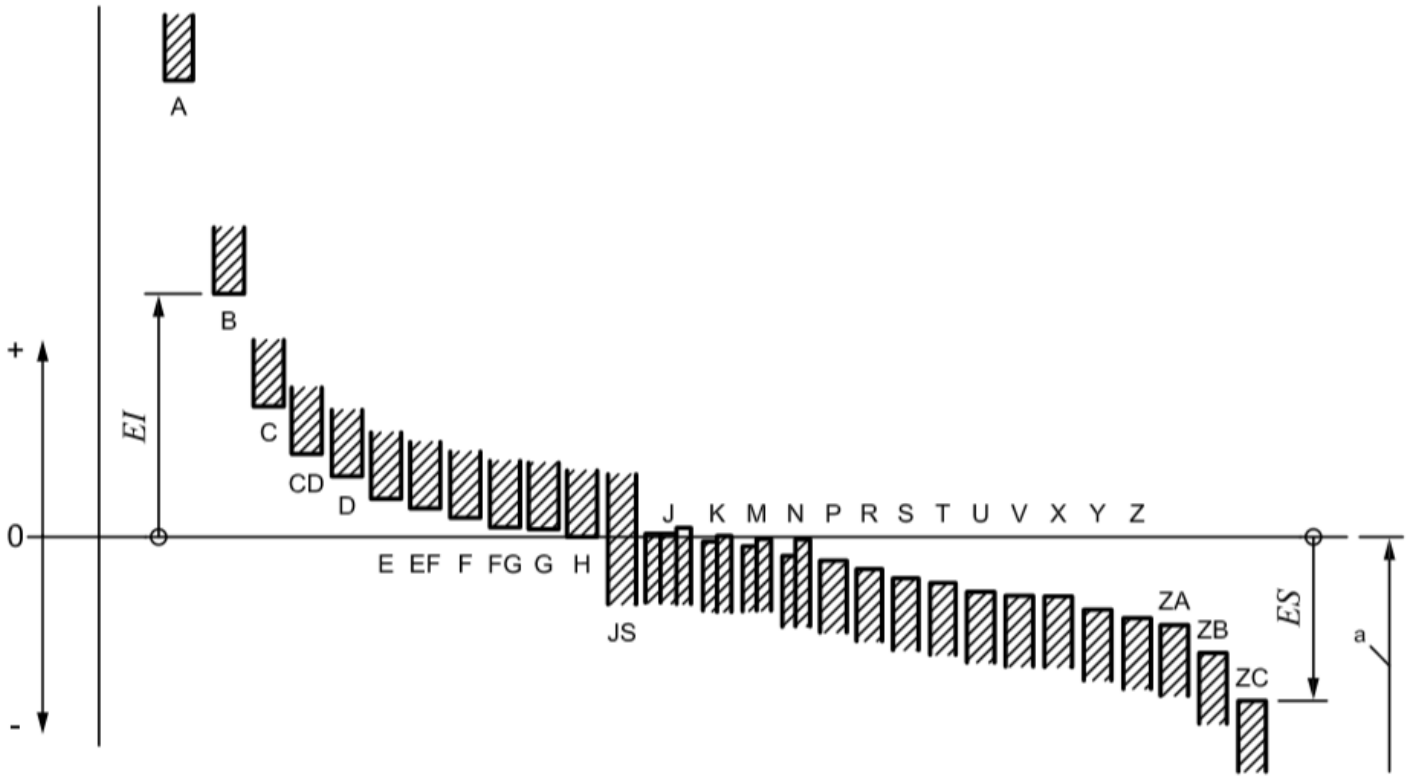

a) Holes (internal features of size)

EI, ES fundamental deviations of holes (examples)
a Nominal size.

Schematic representation of the placement of the tolerance interval (fundamental deviation) relative to the nominal size [2]

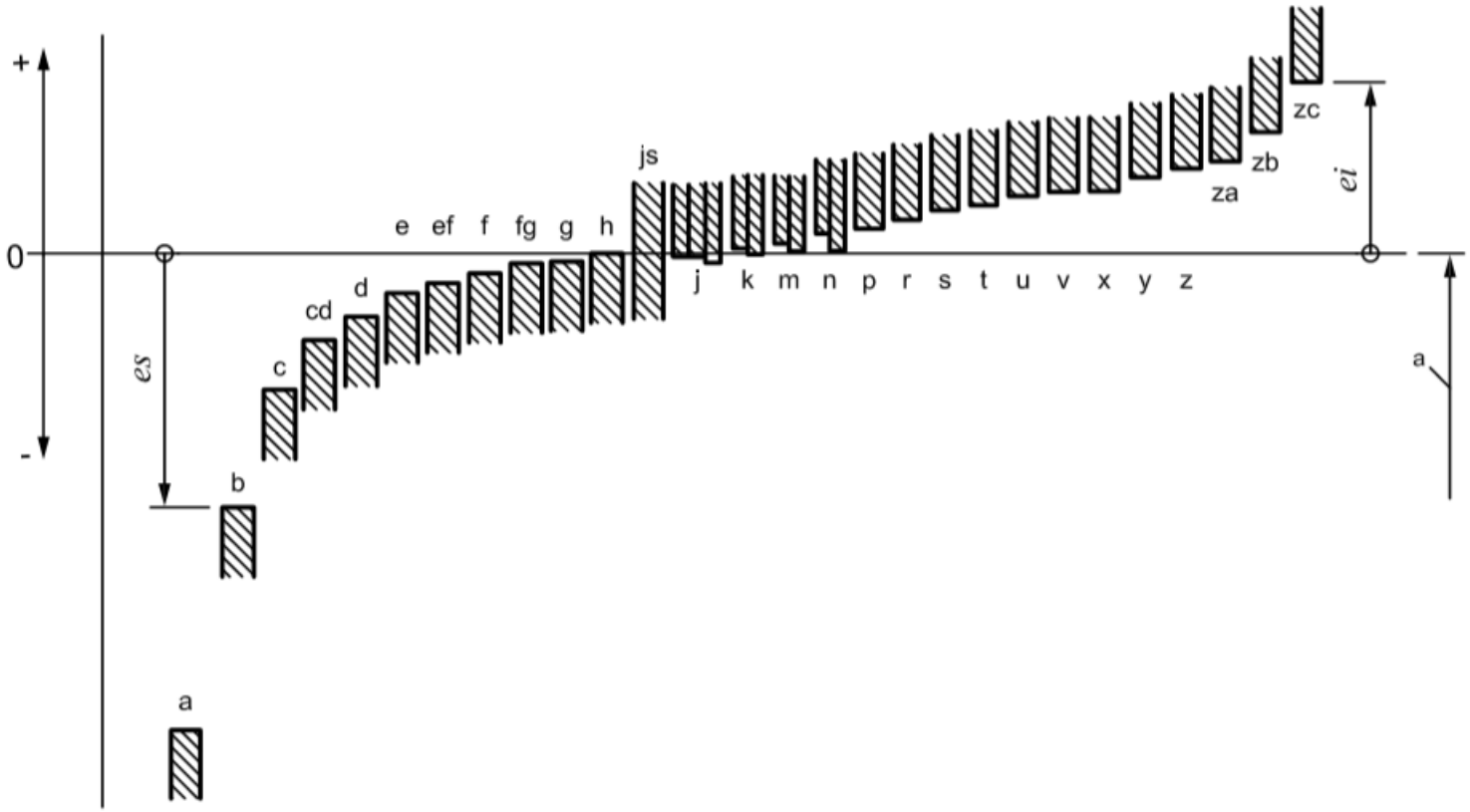

b) Shafts (external features of size)

ei, es fundamental deviations of shafts (examples)
a Nominal size.

Selection of tolerance classes [2]

Holes

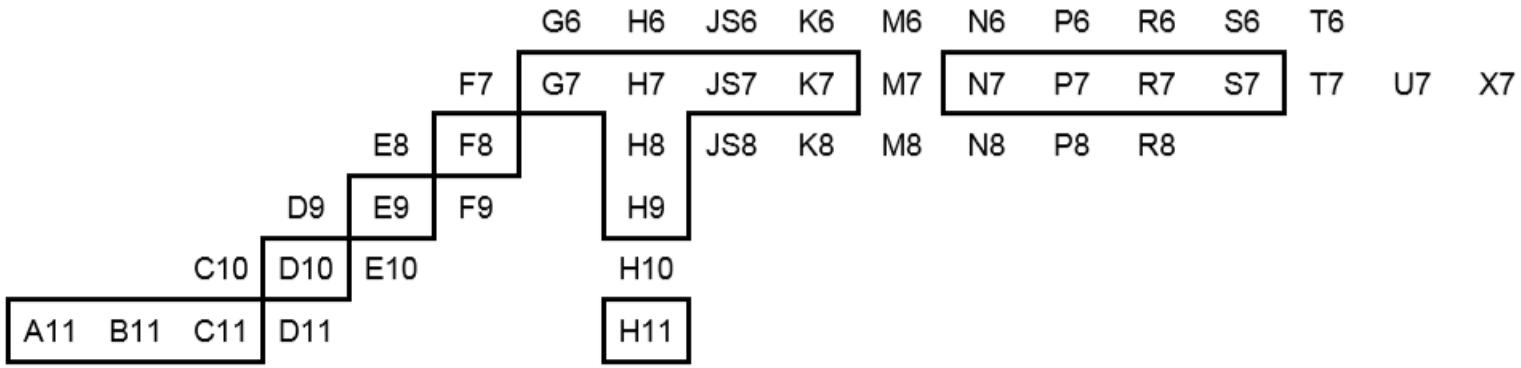

Shafts

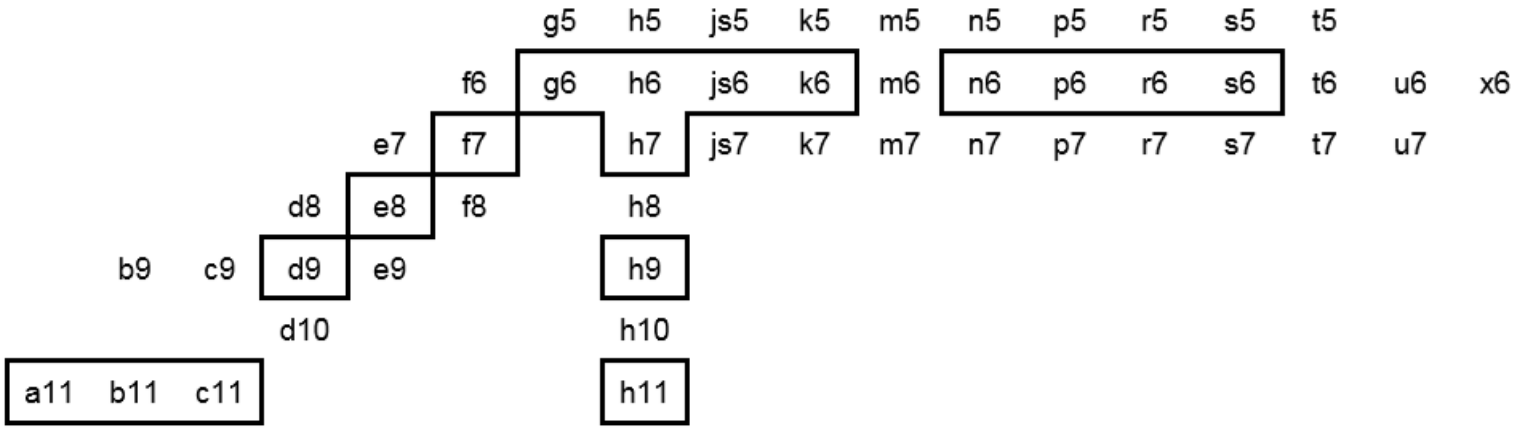

Application [2]

EXAMPLE 1 Calculation of the fit: ∅ 36 H8/f7

From the tables of ISO 286-2 for the hole 36 H8 results:

$ES = +0{,}039$ mm hence it follows: upper limit of size = 36,039 mm

$EI = 0$ lower limit of size = 36,000 mm

and for the shaft 36 f7 results:

$es = -0{,}025$ mm hence it follows: upper limit of size = 35,975 mm

$ei = -0{,}050$ mm lower limit of size = 35,950 mm

Therefore:

lower limit of size of the hole – upper limit of size of the shaft = 36,000 – 35,975 = 0,025 mm

upper limit of size of the hole – lower limit of size of the shaft = 36,039 – 35,950 = 0,089 mm

The calculation results in two positive values. That means the fit has a maximum clearance of 0,089 mm and a minimum clearance of 0,025 mm and it is a **clearance fit.**

Application [2]

EXAMPLE 2 Calculation of the fit: ∅ 36 H7/n6

From the tables of ISO 286-2 for the hole 36 H7 results:

$ES = +0{,}025$ mm hence it follows: upper limit of size = 36,025 mm

$EI = 0$ lower limit of size = 36,000 mm

and for the shaft 36 n6 results:

$es = +0{,}033$ mm hence it follows: upper limit of size = 36,033 mm

$ei = +0{,}017$ mm lower limit of size = 36,017 mm

Therefore:

lower limit of size of the hole – upper limit of size of the shaft = 36,000 – 36,033 = –0,033 mm

upper limit of size of the hole – lower limit of size of the shaft = 36,025 – 36,017 = +0,008 mm

The calculation results in a positive and a negative value. That means the fit has a clearance of 0,008 mm and an interference of 0,033 mm and is a **transition fit**.

3. Surface roughness

- Definition
- Symbology
- Application
- Examples surface roughness

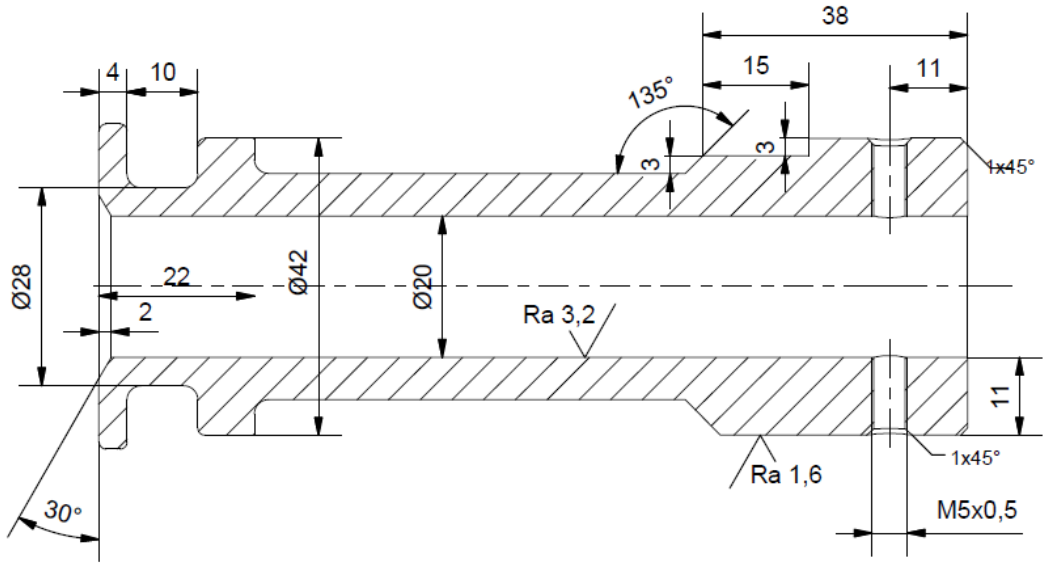

The state of surfaces is defined by two aspects:

- The geometric state/condition, characterized by the geometrical deviation.
- The physic-chemical state/condition, defined by the physic-chemical characteristics.

Definition of surface roughness

Roughness is defined as the group of surface irregularities that have a relatively small space/step an that, normally comprise irregularities resulte from the manufacturing process and/or determined by other factors [1].

Roughness profile – the profile derived from the primary profile by suppressing the longwave components [1].

Roughness profile

Profile parameters, according to ISO 4287

- **P-profile (structural parameters).**
- **W-profile (waviness parameters).**
- **R-profile (roughness parameters).**

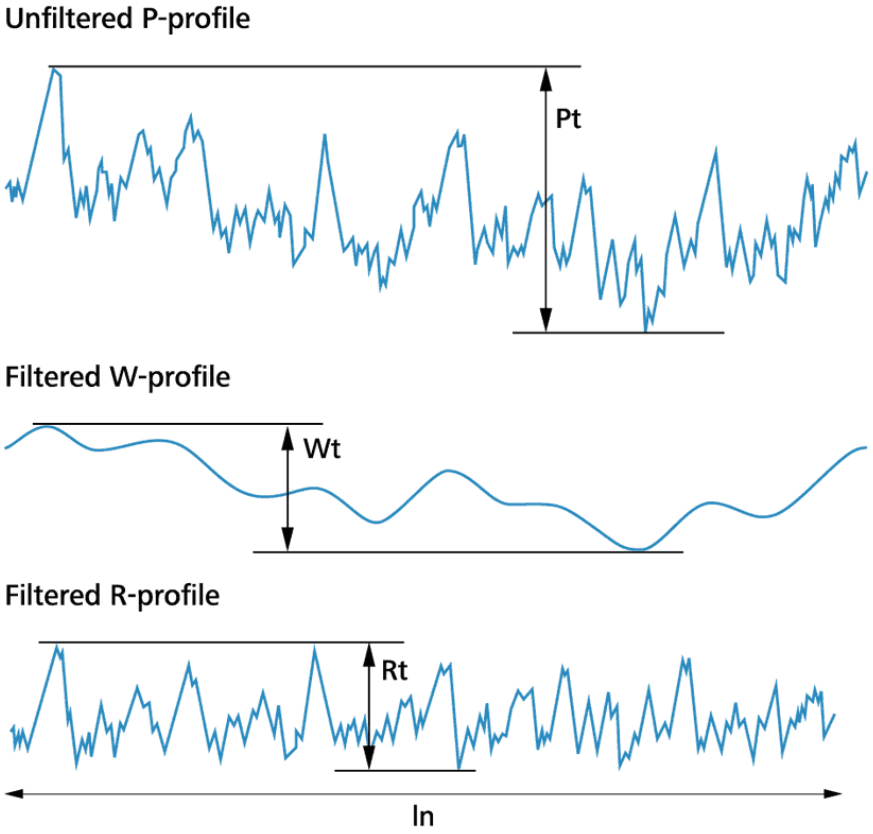

Roughness parameters

According to ISO 4287:1997

Ra – arithmetical mean roughness value: The arithmetical mean of the absolute values of the profile deviations (Z i) from the mean line of the roughness profile.

Rz – maximum height of profile: Average value of the five Rz values.

Rz1max – maximum height of profile: Greatest Rz value from the five sampling lengths lr.

Rt – total height of profile: Rt is the distance between the highest peak and the deepest valley of the profile of the total evaluation length ln.

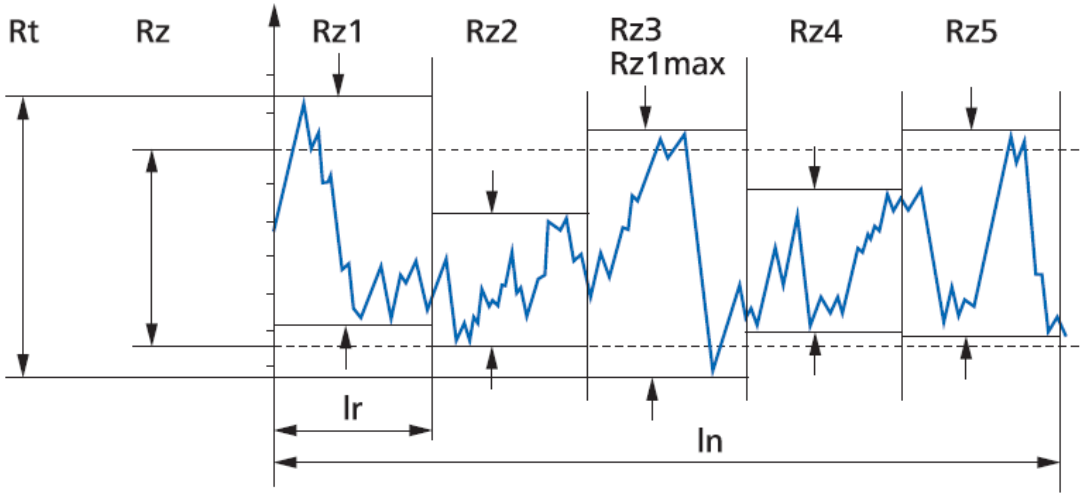

Roughness parameters

According to ISO 4287:1997

RSm - is the arithmetic mean value of the width of the roughness profile elements within the sampling length and requires the definition of height discriminations (c1, c2) matching the function of the surface.

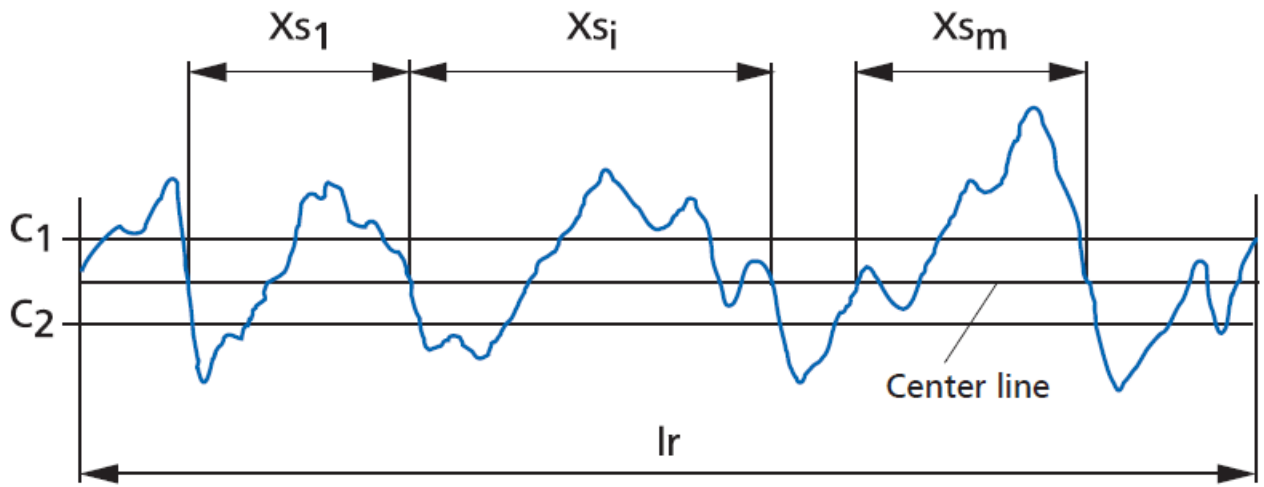

Roughness parameters

According to ISO 4287:1997

RPc – standardized number of peaks: it corresponds to the number of local peaks, which successively exceed an upper section line c1 and a lower section line c2. The number of peaks is related to a length of 10 mm irrespective of the evaluation length selected.

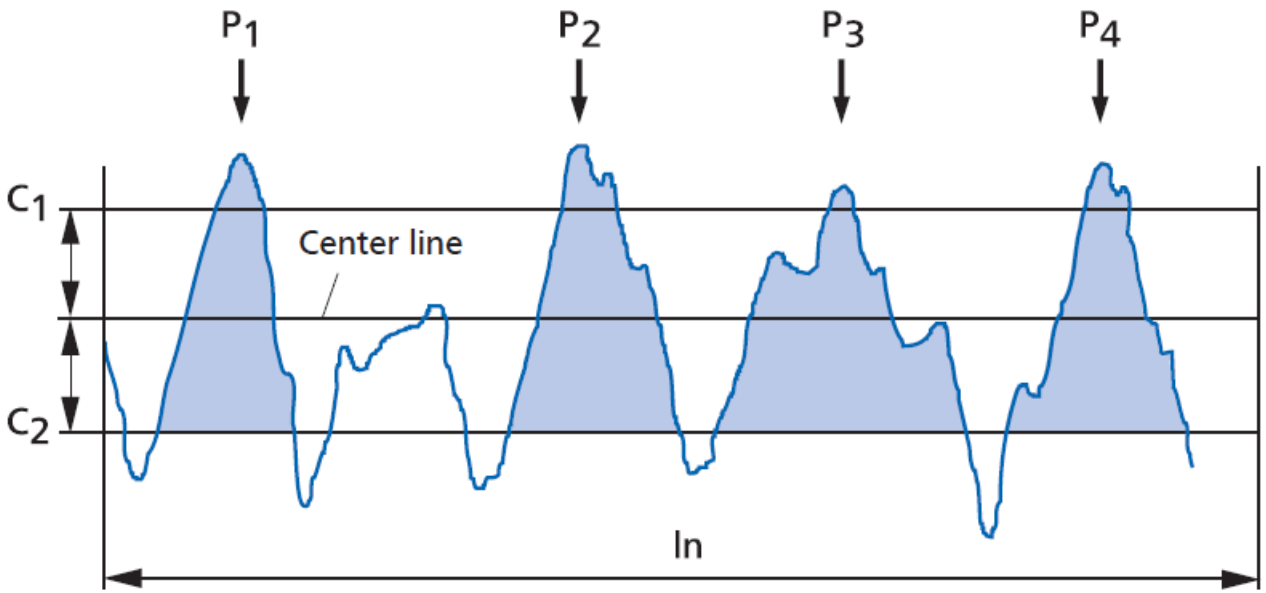

Roughness parameters

According to ISO 4287:1997

Rmr(c) – material ratio of the profile. Rmr indicates what ratio the totalled length in the material has assumed relative to the evaluation length (in %). The comparison is made in the specified section height c and the total evaluation length ln. The material ratio curve indicates the material ratio as a function of the section height.

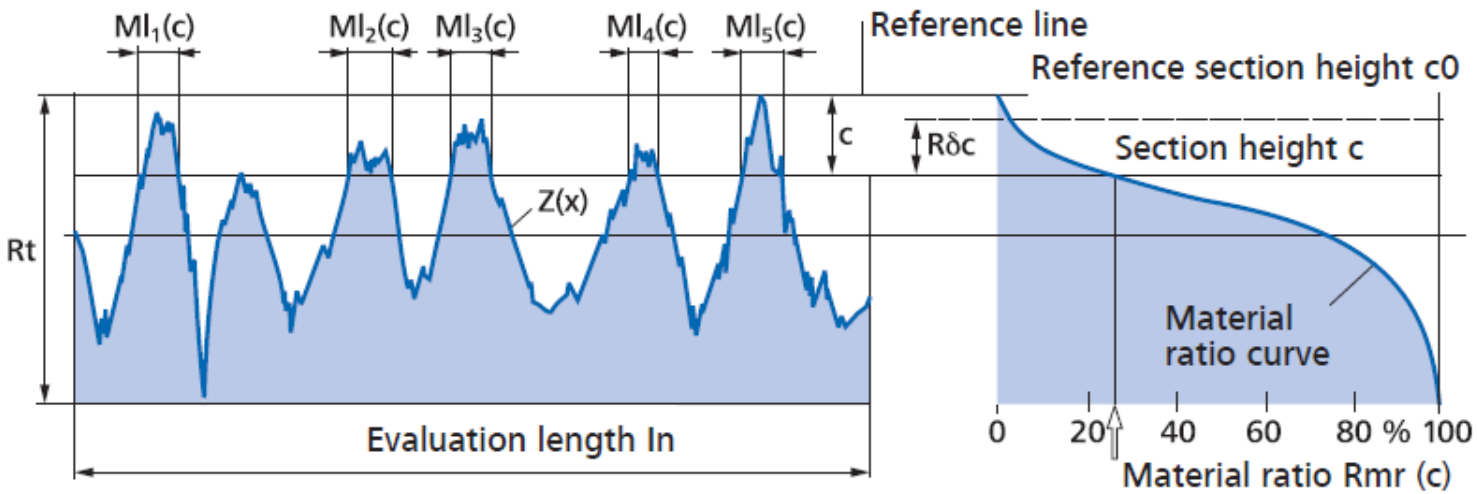

Basic graphical symbol

According to ISO 1302:2002

	Basic symbol
	Removal of material required
	Removal of material not permitted
	Any manufacturing process permitted
	Material shall be removed
	Material shall not be removed

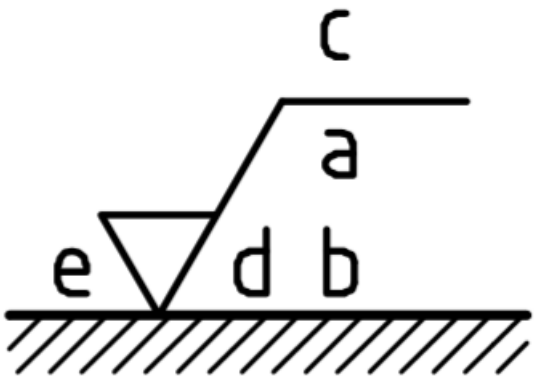

a Single surface texture requirement in µm
b Two or more surface texture requirements (surface parameter in µm)
c Manufacturing method
d Surface lay and orientation
e Machining allowance in mm

Indication of surface lay

According to ISO 1302:2002

Graphical symbol	Interpretation and example	
=	Parallel to plane of projection of view in which symbol is used	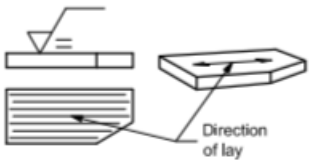
⊥	Perpendicular to plane of projection of view in which symbol is used	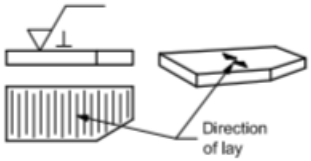
X	Crossed in two oblique directions relative to plane of projection of view in which symbol is used	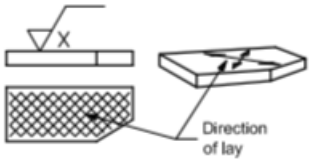
M	Multi-directional	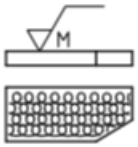
C	Approx. circular relative to centre of surface to which symbol applies	
R	Approx. radial relative to centre of surface to which symbol applies	
P	Lay is particulate, non-directional, or protuberant	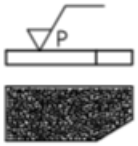

Application [4]

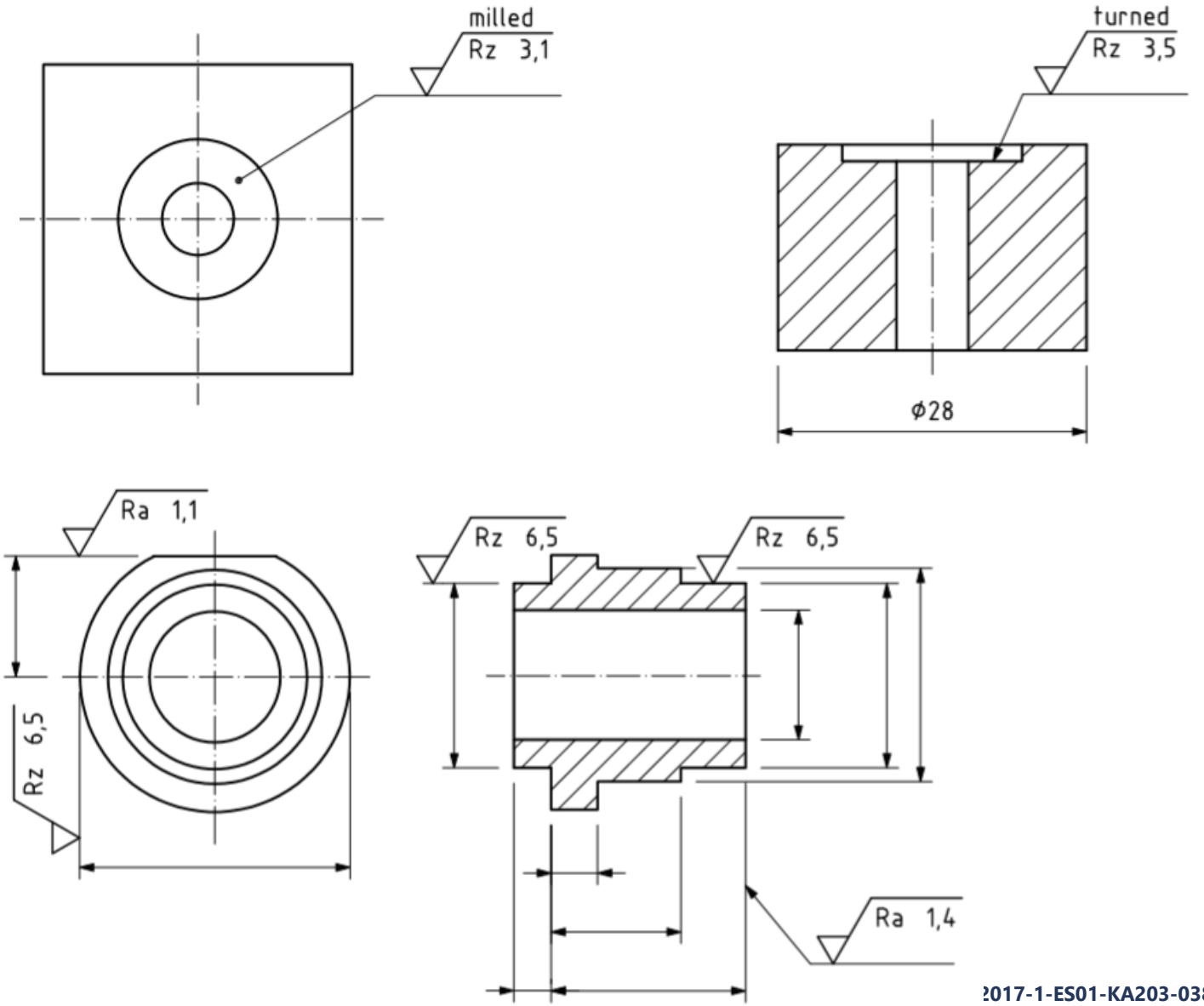

2017-1-ES01-KA203-03858

Examples surface roughness [5]

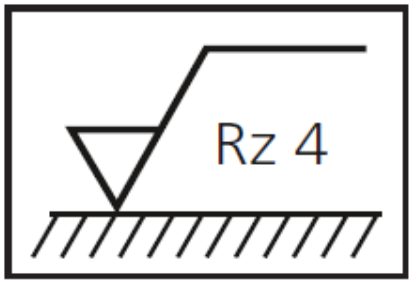

Material removing machining;
Rz = max. 4 µm

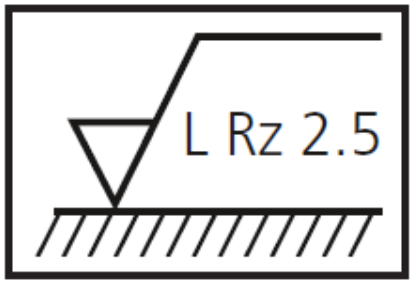

Material removing machining; lower limit value for Rz demanded;
Rz = min. 2.5 µm

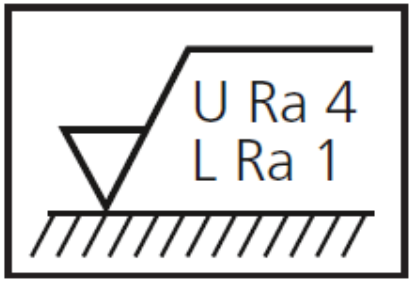

Material removing machining; upper and lower limit value for Ra demanded;
Ra = min. 1 µm and max. 4 µm

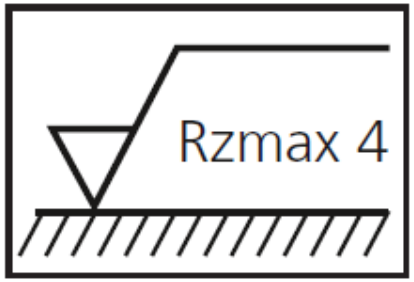

Material removing machining;
Rz = max. 4 µm;
the maximum value rule applies

Examples surface roughness [5]

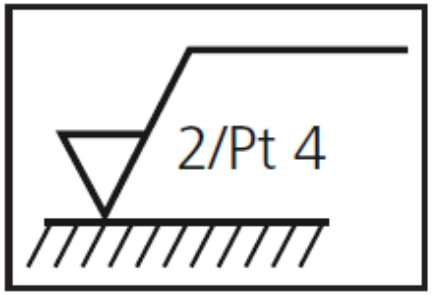

Material removing machining; P-profile, traverse length = 2 mm; Pt = max. 4 µm

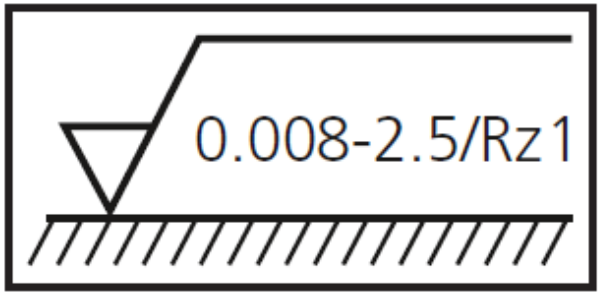

Material removing machining; transmission characteristic does not comply with standard case (cf. table) Rz = max. 1 µm; filter selection λs = 0.008 mm and λc = 2.5 mm

Case studies

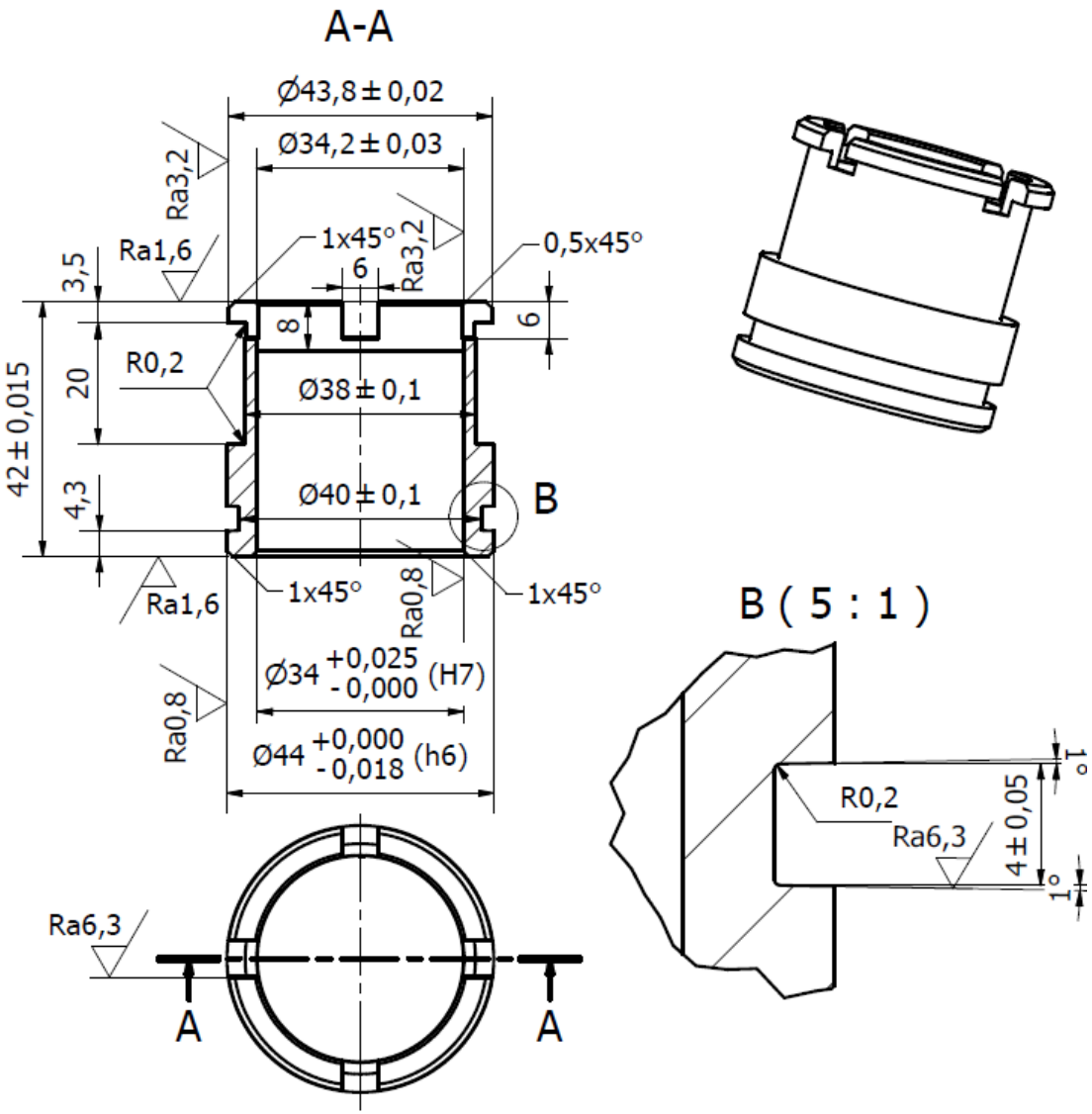

4. Geometrical tolerances

- Definition
- Symbology
- Application
- Case studies

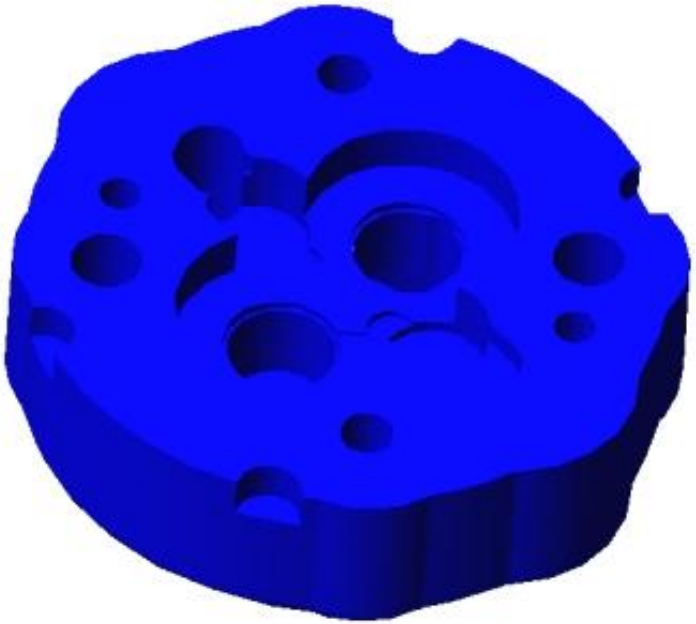

Definitions

The relative position of surfaces is a geometric constrictive characteristic that entails three main categories of conditions/clauses determined by the geometric tolerance associated to them [1]:

ISO defines **Geometric Dimensioning and Tolerancing,** GD&T as “geometrical product specifications (GPS)—Geometrical tolerancing—Tolerancing of form, orientation, location and run-out.”

Geometric Dimensioning and Tolerancing, is a system for defining and communicating design intent and engineering tolerances that helps engineers and manufacturers optimally control variations in manufacturing processes.

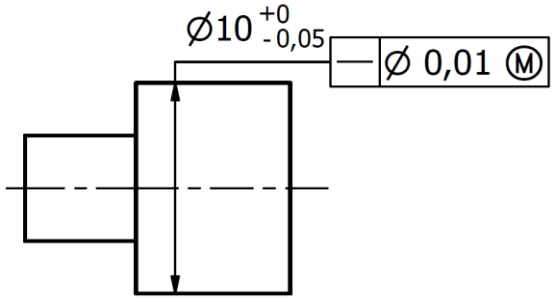

Datum definition

A datum is defined as follows in the **ISO 5459 : 2011**

``One or more situation features of one or more features associated with one or more real integral features selected to define the location or orientation, or both, of a tolerance zone or an ideal feature representing for instance a virtual condition.”

Types of Datums [7]

- **Datum Feature.** A real (non-ideal) integral feature of a target used for establishing a datum (e.g. surface of a part or hole).
- **Simulated Datum Feature.** An actual surface with sufficiently precise shape that comes into contact with a datum feature and is used for establishing a datum (e.g. surface plate, bearing, and mandrel).
- **Datum System.** A group of datums created by combining more than one individual datum in order to use it as a reference for toleranced features.

Maximum Material Condition (MMC) and Least Material Condition (LMC)

Maximum material condition (MMC) is used to indicate tolerance for mating parts such as a shaft and its housing.

Least material condition (LMC) is used to indicate the strength of holes near edges as well as the thickness of pipes [7].

Maximum Material Condition (MMC)- is that condition of a part feature wherein it contains the maximum amount of material within the stated limits of size. That is: minimum hole size and maximum shaft size.

Least Material Condition (LMC) - implies that condition of a part feature of size wherein it contains the least (minimum) amount of material, examples, largest hole size and smallest shaft size. It is opposite to maximum material condition.

Geometric Characteristic (GD&T) Symbols:

The symbols that are used to specify the type of geometric control.

Tolerances	Characteristics	Symbols	Datum Needed	Applicable Modifiers (RMS, LMC, MMC)
Form	Straightness	—	No	LMC or MMC can apply to feature of size
Form	Flatness	⏥	No	Does not apply
Form	Circularity	○	No	Does not apply
Form	Cylindricity	⌭	No	Does not apply
Profile	Line Profile	⌒	No	Does not apply
Profile	Surface Profile	⌓	No	Does not apply
Orientation	Perpendicularity	⊥	Yes	LMC or MMC can apply to feature of size
Orientation	Angularity	∠	Yes	LMC or MMC can apply to feature of size
Orientation	Parallelism	//	Yes	LMC or MMC can apply to feature of size

Geometric Characteristic (GD&T) Symbols:

The symbols that are used to specify the type of geometric control.

Tolerances	Characteristics	Symbols	Datum Needed	Applicable Modifiers (RMS, LMC, MMC)
Location	Symmetry	⌯	Yes	RFS always
Location	Positional	⌖	Yes And No	LMC or MMC can apply to feature of size
Location	Concentricity	◎	Yes	RFS always
Runout	Circular Runout	↗	Yes	RFS always
Runout	Total Runout	⌰	Yes	RFS always

Geometric Characteristic (GD&T) Symbols:

Description	Symbols	References
Max Material Condition (MMC)	Ⓜ	ISO 2692/ASME
Least Material Condition (LMC)	Ⓛ	ISO 2692/ASME
Regardless Of Feature Size (RFS)	Ⓢ	ISO/ASME
Spherical Diameter (SD)	SØ	ISO/AMSE
Radius	R	ISO/ASME
Diameter	Ø	ISO/ASME
Envelope Requirement	Ⓔ	ISO/ASME
Free State Condition(Non Rigid Parts)	Ⓕ	ISO 10579/ASME
Minor Diameter	LD	ISO/ASME
Major Diameter	MD	ISO/ASME
Pitch Diameter	PD	ISO/ASME
Common Zone	CZ	ISO/ASME
Exact Dimension	60	ISO/ASME

Geometric Characteristic (GD&T) Symbols:

Description	Symbols	References
Dimension Origin		ISO/ASME
All Round (Profile)		ISO NONE/ASME
Datum Feature Indication	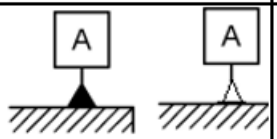	ISO/ASME
Datum Target Indication		ISO 5459
Projected Tolerance Zone		ISO 10578/ASME

Applications [7]

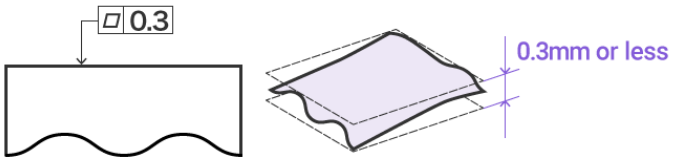

This surface must be between two parallel planes separated by only 0.3 mm.

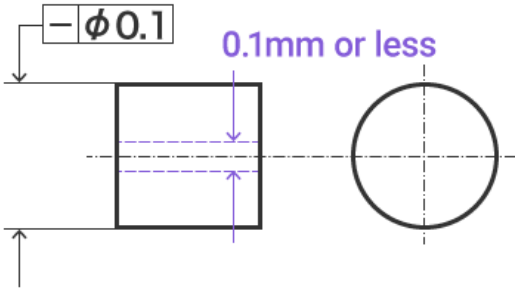

If a tolerance frame is connected to the size indicating the diameter of a cylinder, the axis of that cylinder must be within a cylinder with a diameter of 0.1 mm.

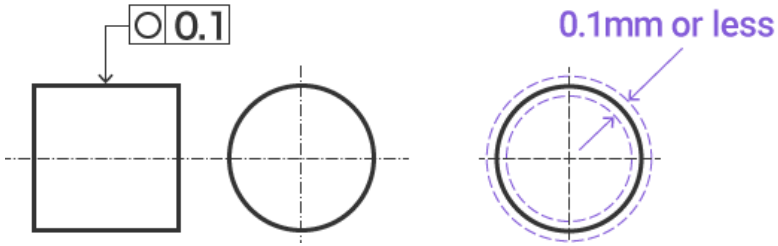

The outer circumference of any cross-section of a shaft cut perpendicularly should be between two concentric circles just 0.1 mm apart on the same plane.

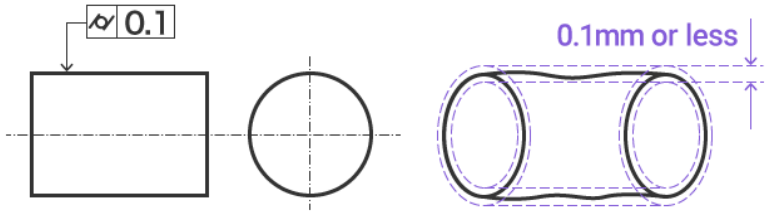

The target plane must be between two coaxial cylinders just 0.1 mm apart.

Applications [7]

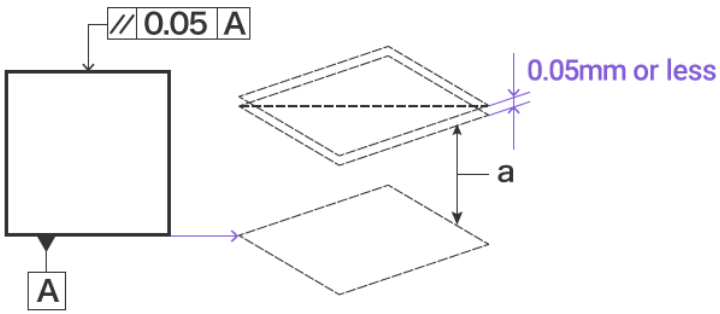

The plane indicated by the indication arrow must be parallel to datum plane A and be between two planes only 0.05 mm apart in the direction of the indication arrows.

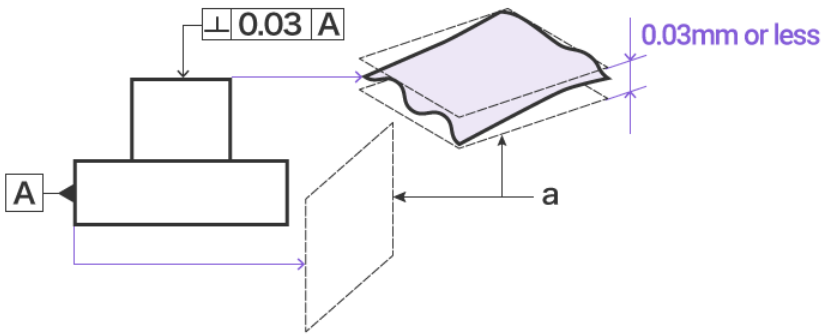

The plane indicated by the indication arrow must be within a cylinder perpendicular to datum plane A and with a diameter of 0.03 mm.

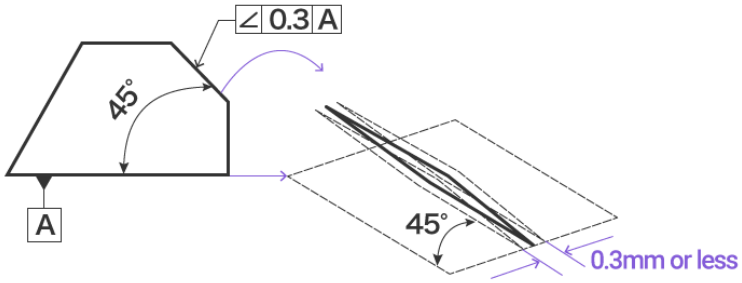

The plane indicated by the indication arrow must be theoretically exactly angled by 45 degrees to the datum plane A and between two parallel planes only 0.3 mm apart in the direction of the indication arrows.

Applications [7]

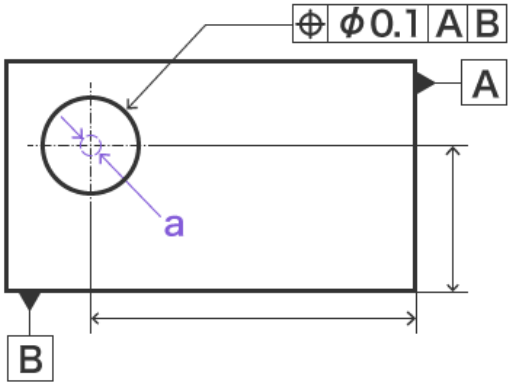

The plane indicated by the indication arrow must be parallel to datum plane A and be between two planes only 0.05 mm apart in the direction of the indication arrows.

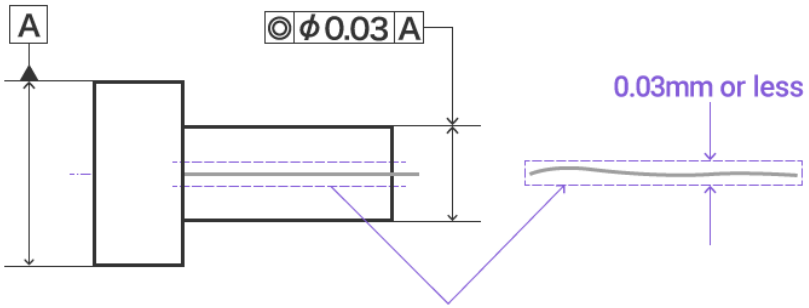

The axis of the cylinder indicated by the indication arrow must be within a cylinder with datum axis line A as the axis and a diameter of 0.03 mm..

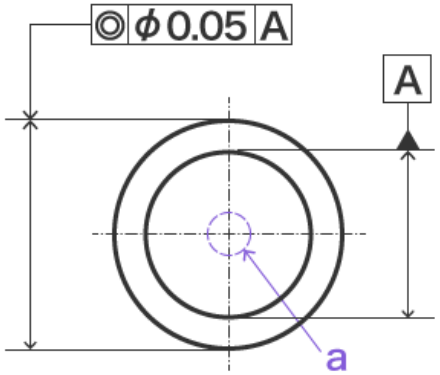

The axis of the cylinder indicated by the indication arrow must be within a cylinder with datum axis line A as the axis and a diameter of 0.05 mm..

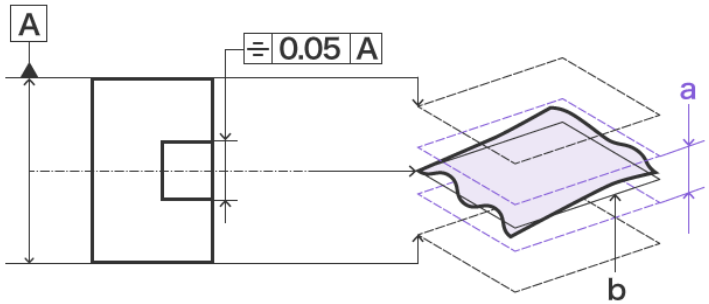

The center plane indicated by the indication arrow must be between two parallel planes symmetrical to the datum center plane A and separated from each other by 0.05 mm.

Applications [7]

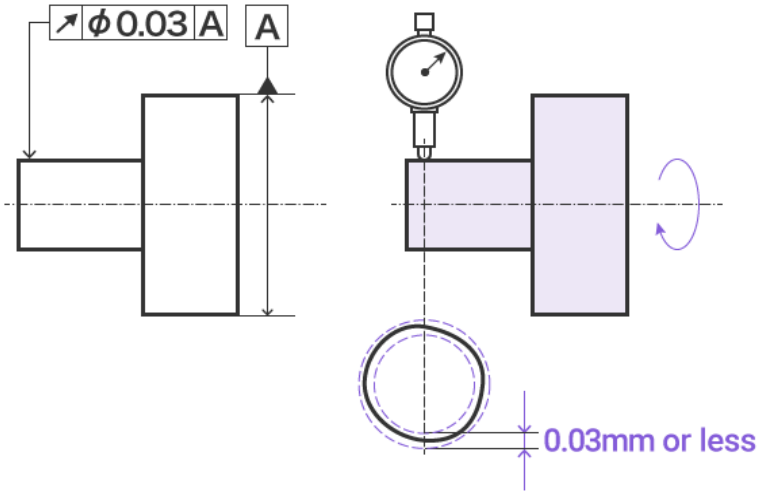

The run-out of the cylindrical surface in the radial direction, indicated by the indication arrow, must not surpass 0.03 mm on any measurement plane perpendicular to the datum axis line when the target is rotated once on the datum axis line..

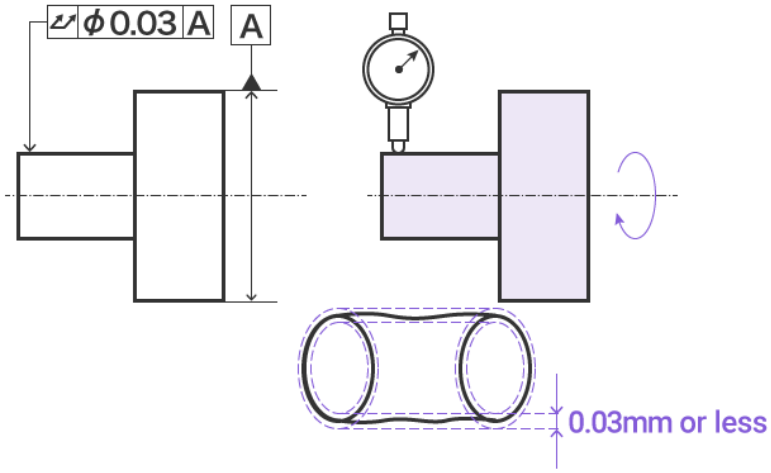

The total run-out of the cylindrical surface in the radial direction, indicated by the indication arrow, must not surpass 0.03 mm at any point on the cylindrical surface when the cylinder part is rotated on the datum axis line.

References

1. Ionescu, N., Visan, A., ManolacheD., & Nistor, C. (2016). Tolerance Design, Publishing house PRINTECH, Bucharest.
2. ISO 286-1 Geometrical product specifications (GPS) — ISO code system for tolerances on linear sizes — Part 1: Basis of tolerances, deviations and fits
3. http://makox.com/mechanical-engineering/fundamental-concepts-interchangeability/
4. ISO 1302:2002(E) Geometrical Product Specifications (GPS) — Indication of surface texture in technical product documentation
5. Roughness-leaflet-v2 en (1). https://www.jenoptik.com › roughness-leaflet-v2 en
6. ISO 5458: Geometrical Product Specifications (GPS) — Geometrical tolerancing — Positional tolerancing
7. https://www.keyence.com/ss/products/measure-sys/gd-and-t/basic/about.jsp