Advanced design with NX 12(90 h)

UPenAUTO : 2017-1-ES01-KA203-03858

Erasmus+

UPenAUTO: UPSKILLED ENGINEERING PROFILES FOR THE AUTOMOTIVE SECTOR AND UPTAKE OF ALTERNATE SCHEME IN EUROPE´S HIGHER EDUCATION.

Gestamp

GTI
GESTAMP TECHNOLOGY INSTITUTE

FABRIKAZIOAREN ZENTRO AURRERATUA
CENTRO AVANZADO DE FABRICACIÓN

somorrostro
centro de formación / irakas-gunea

UNIVERSITATEA POLITEHNICA

SURFACES

In this chapter, we will learn how to create surface models in NX 12. Up to this point, you have learned different ways to create models by using Form Features or by Sketching. Surface modeling involves creating solids in the form of surfaces particularly the B-surface. Because of their construction techniques and design applications, these surfaces are usually stylistic.

Apart from the specific comands for the surface modeling, I will say that you also can create surfaces using the extrude comand or the revolve, but in the pop up menu of those operations in the settings part you have to change from solid to sheet.

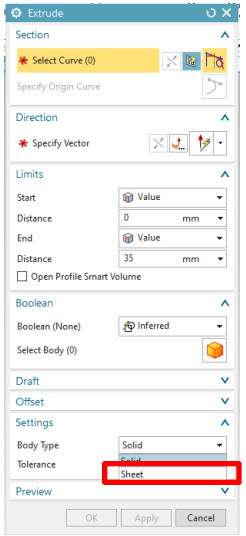

The rest of the comands of surfaces you will find them under the surfaces tab

In the first part of the course with the basic exercices we will be working with the most basic surface operations such as the bounded plane, the ruled surface, the trim sheet comand, sew,fill and the extrude or revolution in the sheet mode.

As we go deeper and more advanced in the course, we will be foucusing in the stamping dies and learning how we can manipulate real car style surfaces, we will use comands like sweep, through curve mesh, law extension, untrim, enlarge and much more.

There are a lot of surfaces comands and many ways to obtain the same result with different orders. The ones that are not explained in the course you will have them in the NX manual.

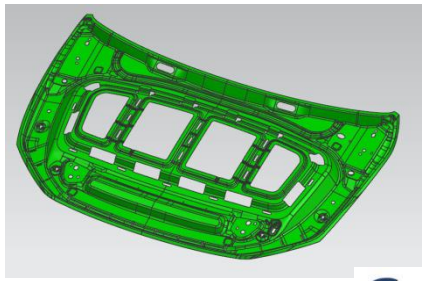

Real surface, tha we will be working with, from an stamping die.

Now we will start doing an example of basic surface excercice:

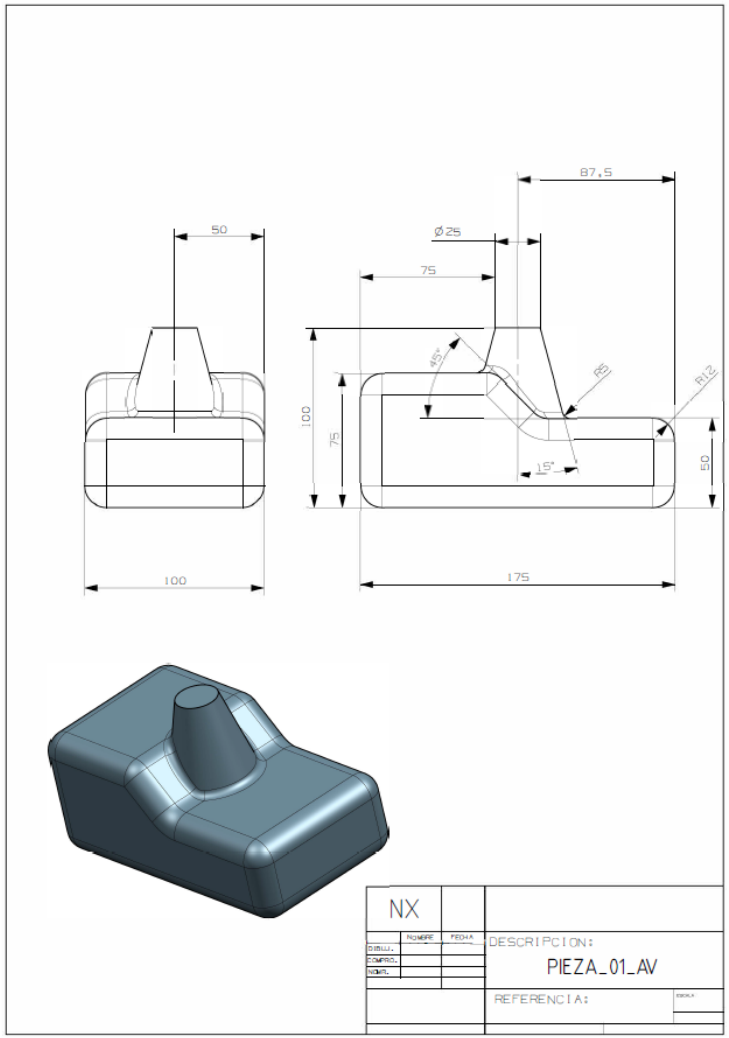

STEP 1

We willl create a sketch of the profile of the figure. (you already know how to create an sketch)

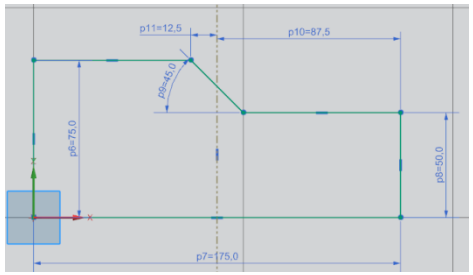

STEP 2

Extrude the profile, but in settings, we will change from solid to sheet

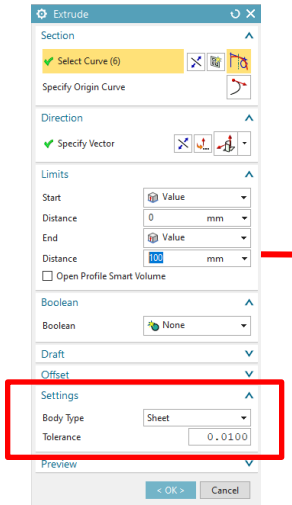

Result

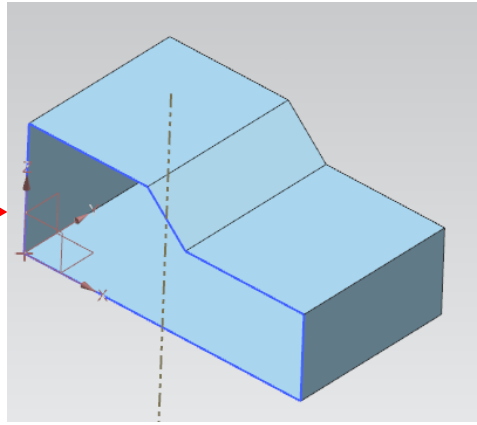

STEP 3

We willl use the bounded plane comand to close both sides of the profile that we just extrude. The bounded plane alows you to create a flat surface using edges of a certain geometry. Bounded Plane

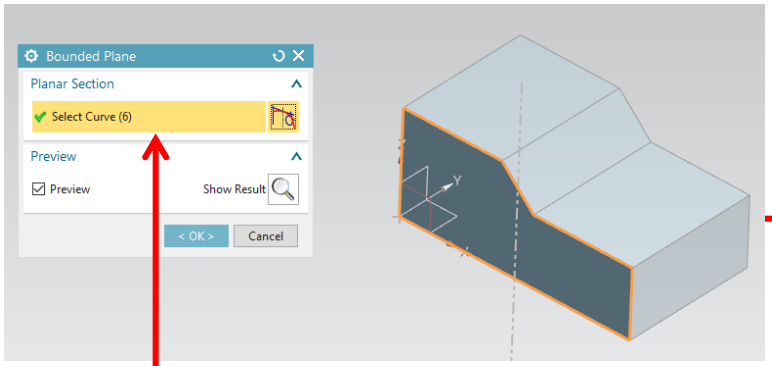

Result

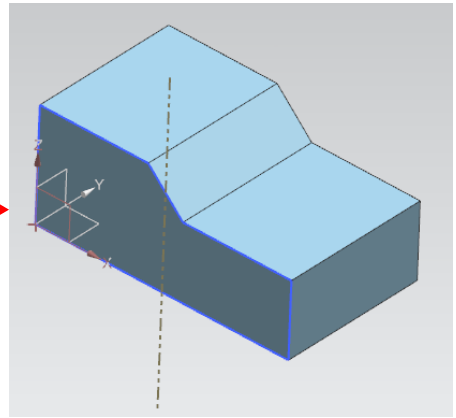

(Select the six lines that close the profile)

STEP 4

Repeat the step 3 and close the side that is hiden in the last picture

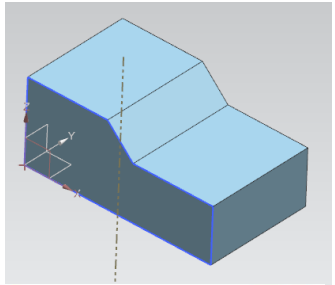

STEP 5

Generate a plane above the cone that is in the middle of the figure, and use that plane to support the sketch that contains the geometry of the top Ø of the cone.

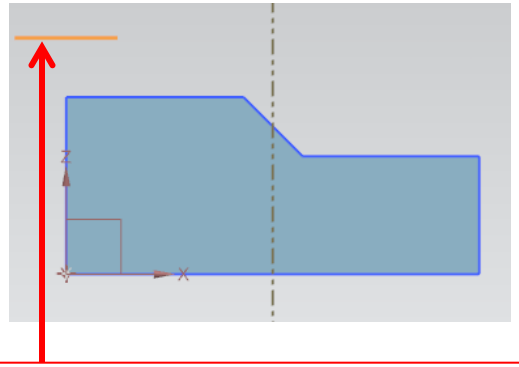

(new plane, parallel to the xy plane)

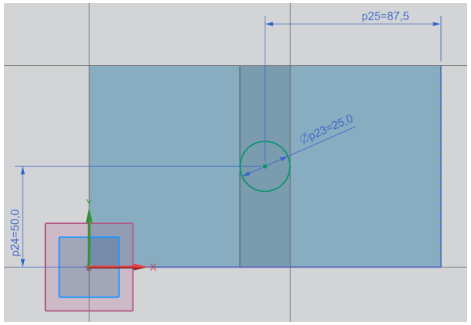

(Draw the geometry using the plane to support the sketch)

Result

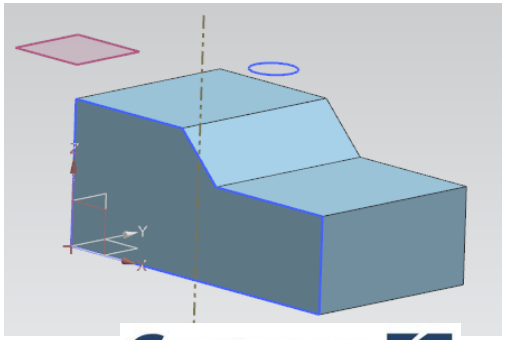

STEP 6

Extrude the sketch, selecting the sheet option in settings and in this case we will use the draft tab, to give a draft of 15 degrees to the sufraces

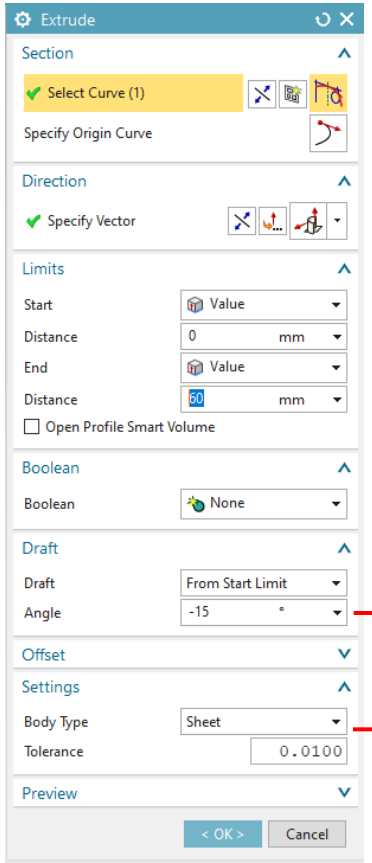

Draft option

Sheet option

Result

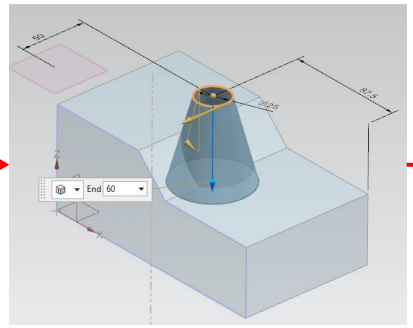

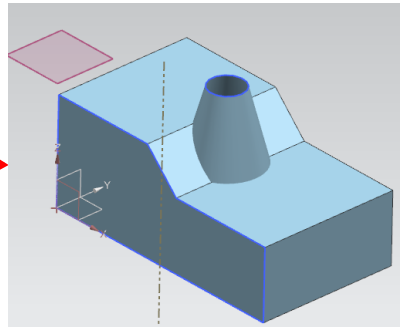

STEP 7

Use the Fill comand to generete a surface in the top part of the cone. As the bounded plane the fill surface generates surfaces by selecting edges of existing geometry, but the big difference between them, is that the fill order can generate curve surfaces. Fill Surface

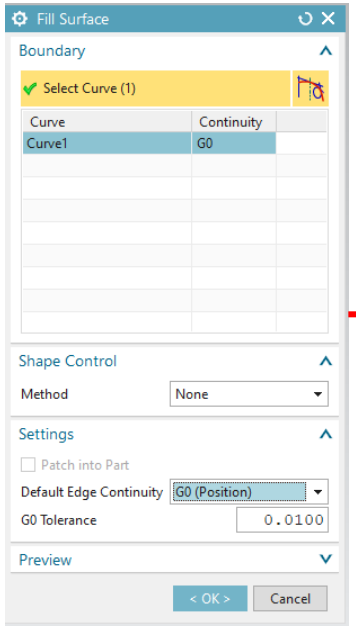

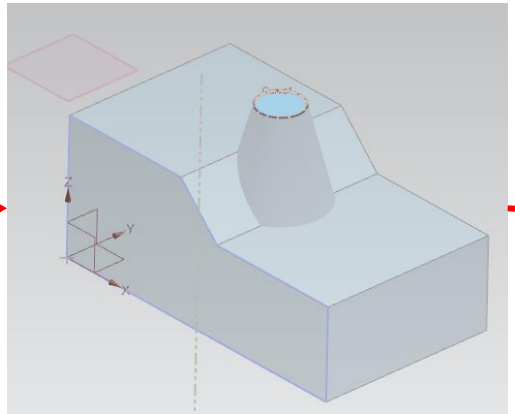

Result

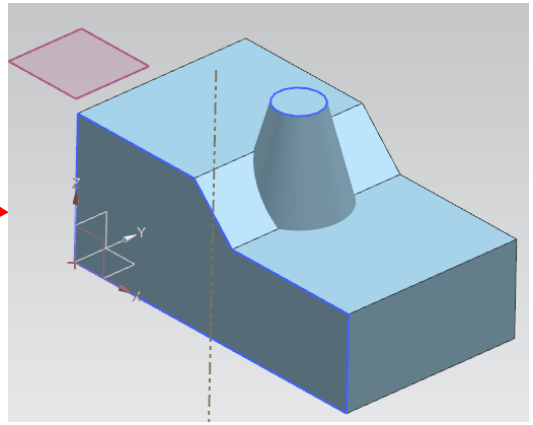

STEP 8

Here we will trim the surfaces between each other to obtain a perfect intersection, to sew them together later on

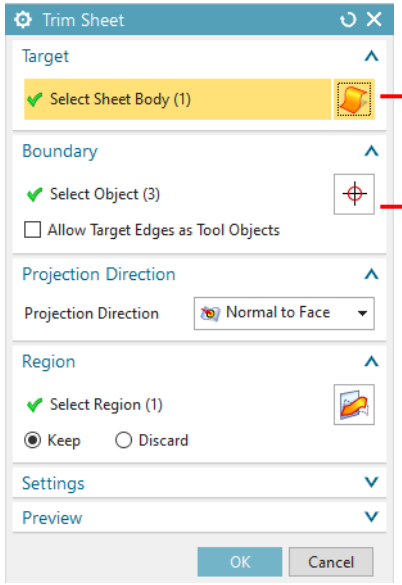

Element we want to trim

Element to trim with

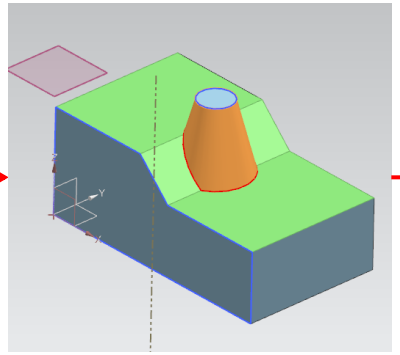

Result

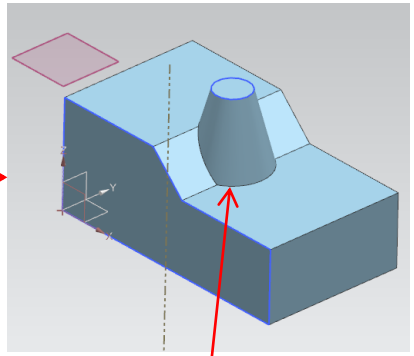

Hard edge

STEP 9

Repeat the step 8, but now making the inverse, cut the body surface with the cone surface.

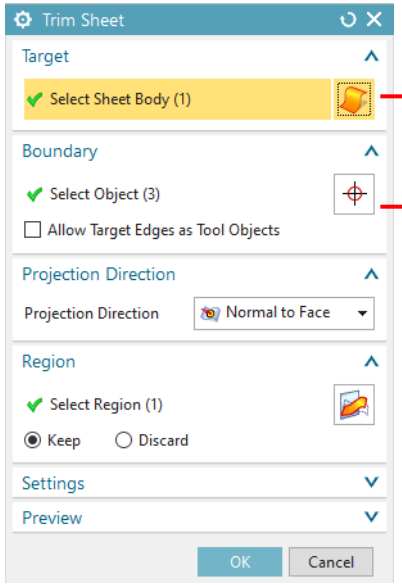

Element we want to trim

Element to trim with

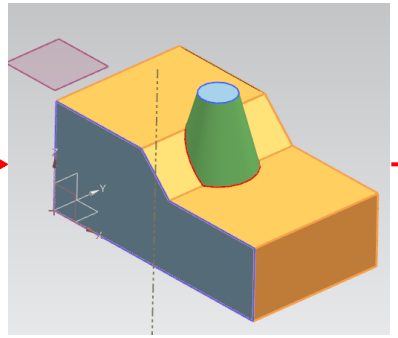

Result

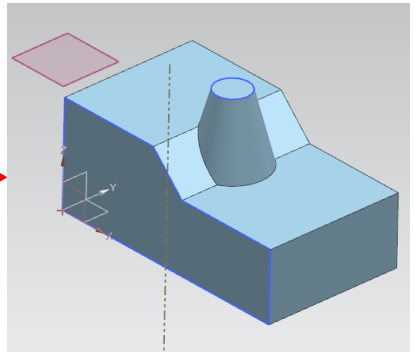

STEP 10

Sew all the surafaces together. In NX if all the surfaces are sewed together and don't have any errors, will generate a full solid by default .

Result

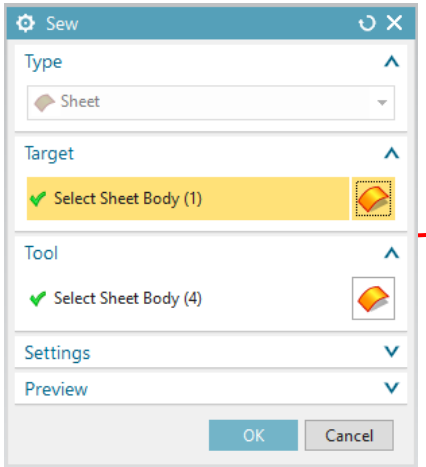

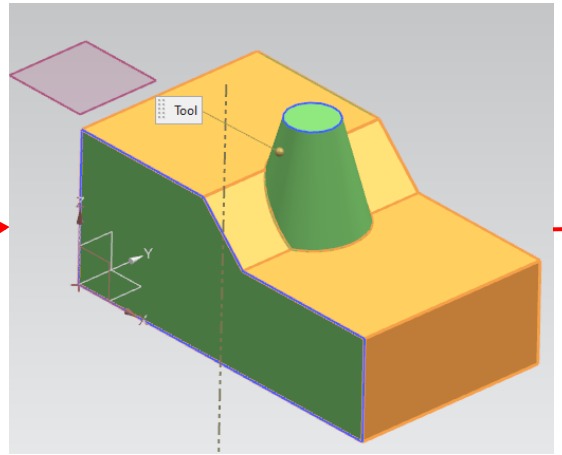

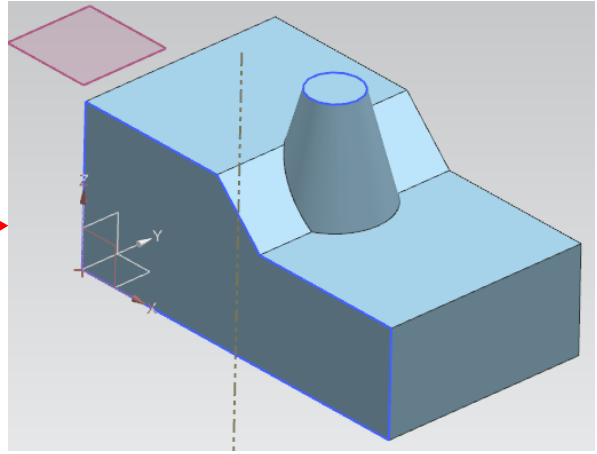

STEP 11

Final step. We will make all the edge fillet that are sown in the exercice.

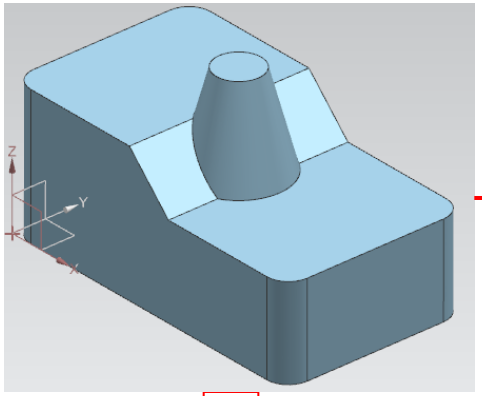

1

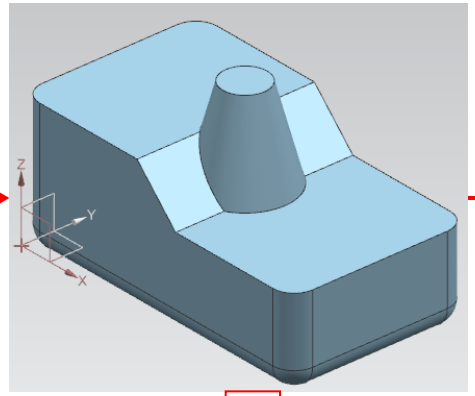

2

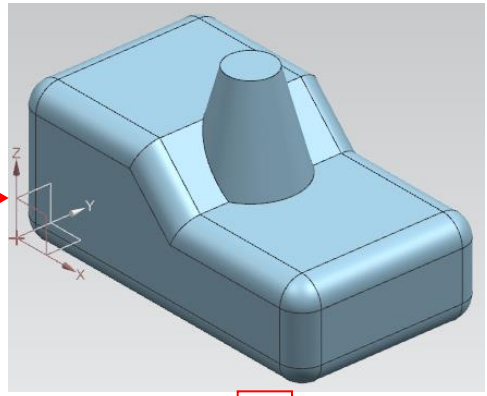

3

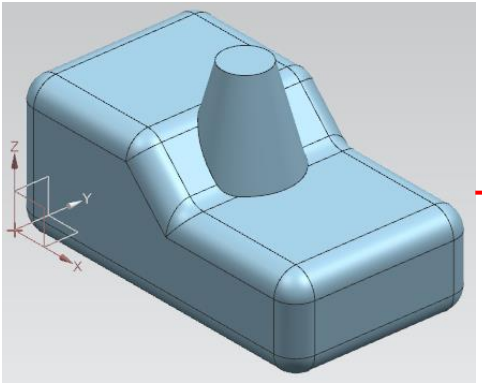

4

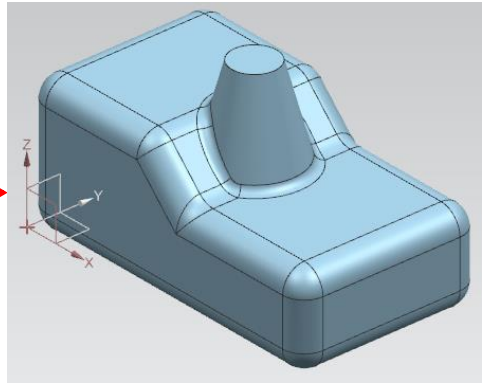

FINAL RESULT

As we get more advanced with the surfaces, focusing on the stamping die surfaces, we will have to understand the continuity of the surfaces.
Is one of the most important features inside the menus of some of the surfaces comand like through curve mess, fill, sweept or bridge (there are more).

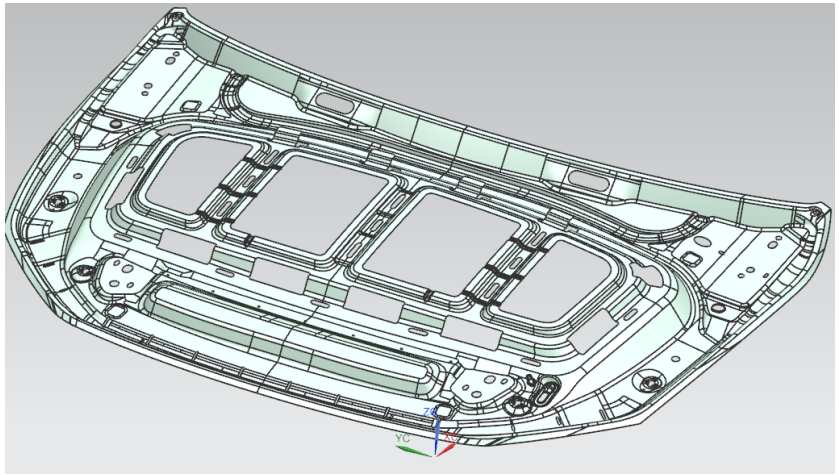

When you work with this kind of surfaces, mostly the first step is to close all the holes and gaps in the surfaces, you have to do that so you can trim solids with that surfaces.

For that reason we need to understand the continuity concept. Because is the way that the program creates those surfaces, using other ones as reference, and where those two surfaces intersect is where the continuity is really impotant.

CONTINUITY

There are 3 important types of continuity G0 (position), G1 (tangency), G2 (curvature).

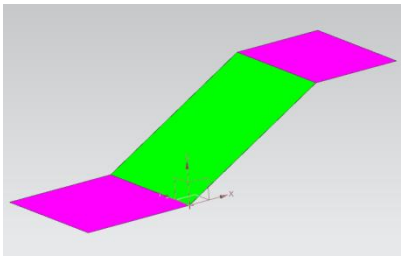

G0-continuity, only de position is mantained.

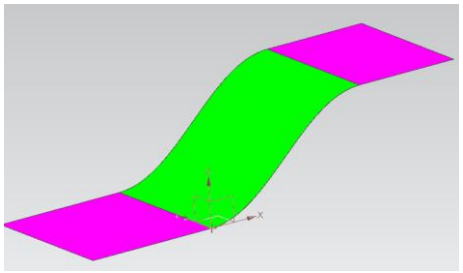

G1-continuity, blends the two magenta surfaces, making tangent the end of the magenta edge with the begining of the green edge.

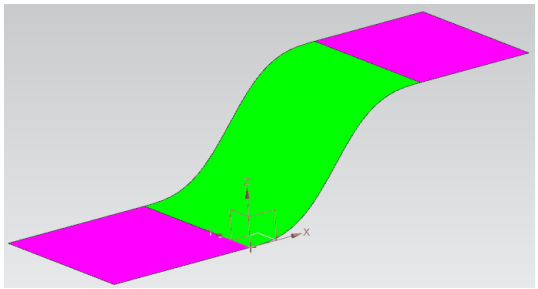

G2-continuity, behave as the G1 but it trys to extend farder the tangency,

SURFACE EXERCISES

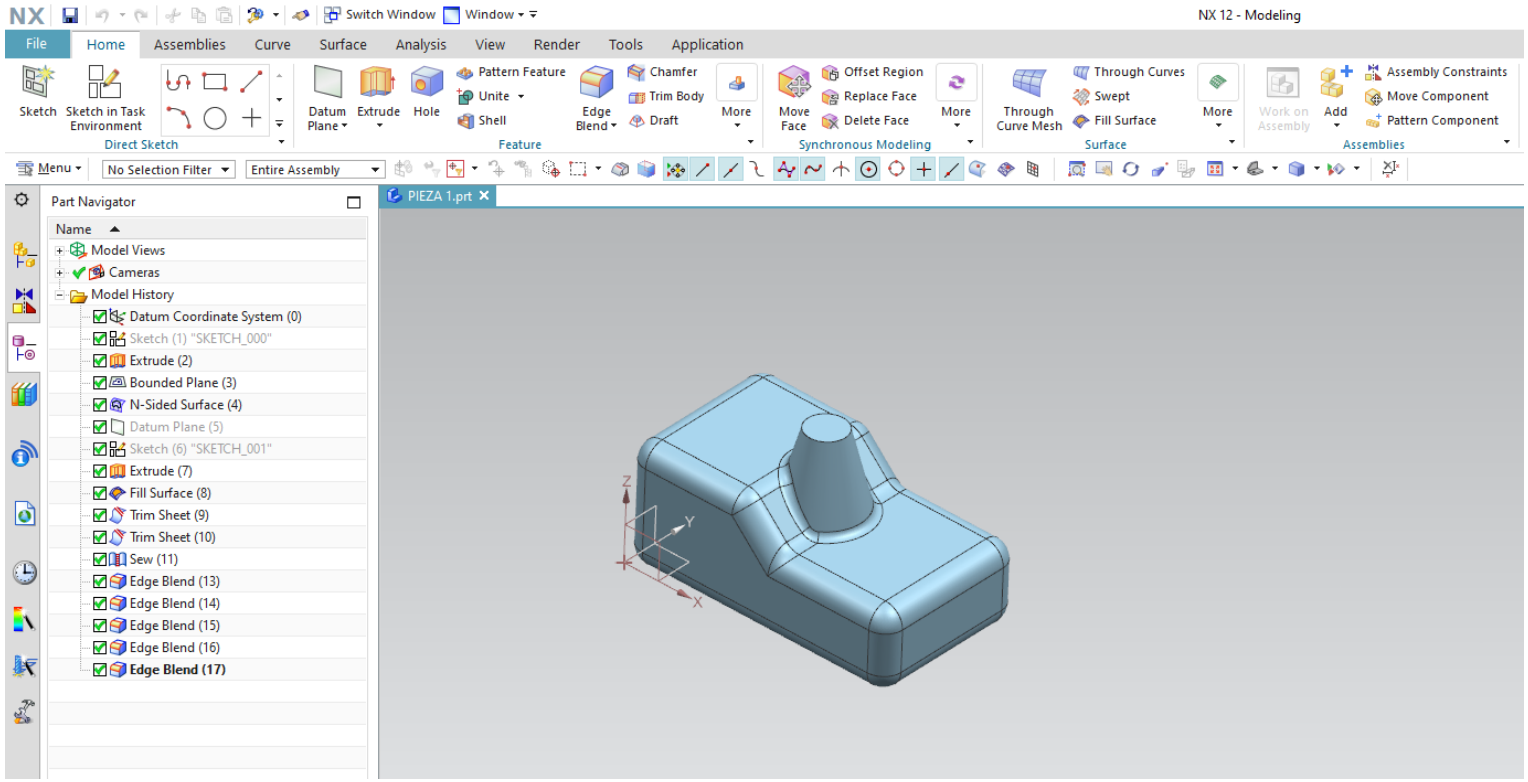

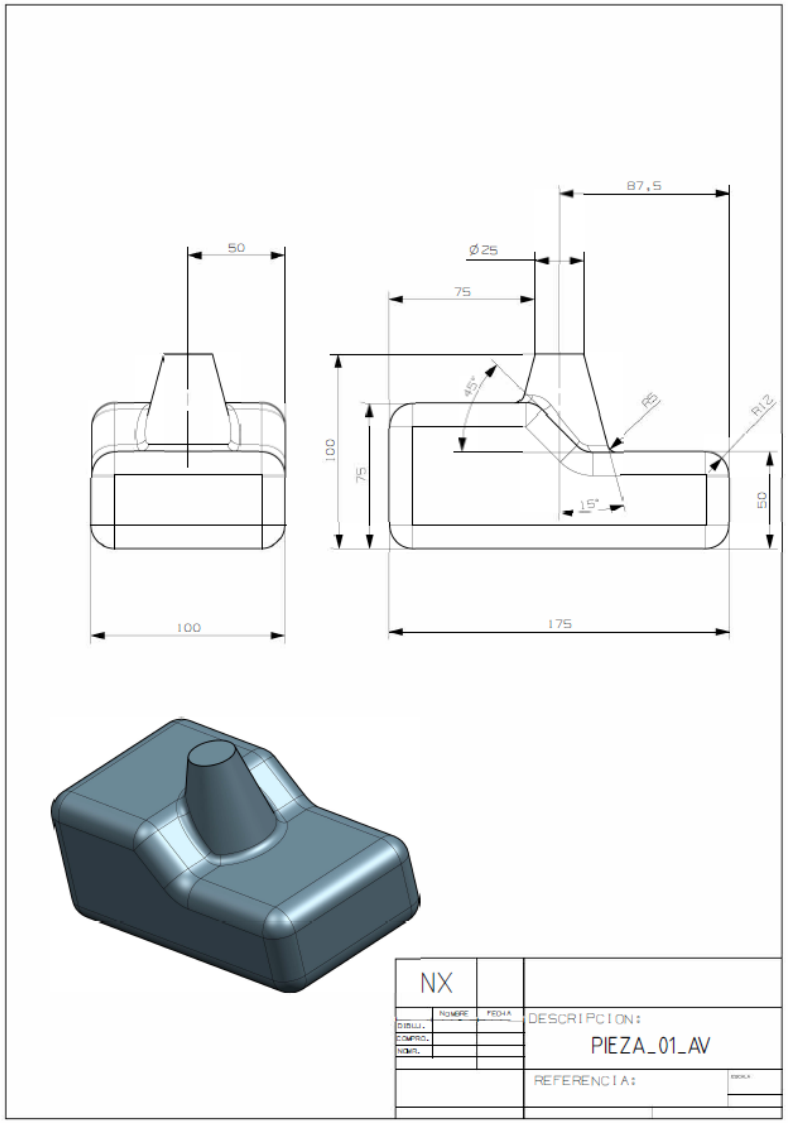
50
87,5
Ø25
75
45°
R5
R12
100
75
15°
50
100
175
NX
DESCRIPCION:
PIEZA_01_AV
REFERENCIA:

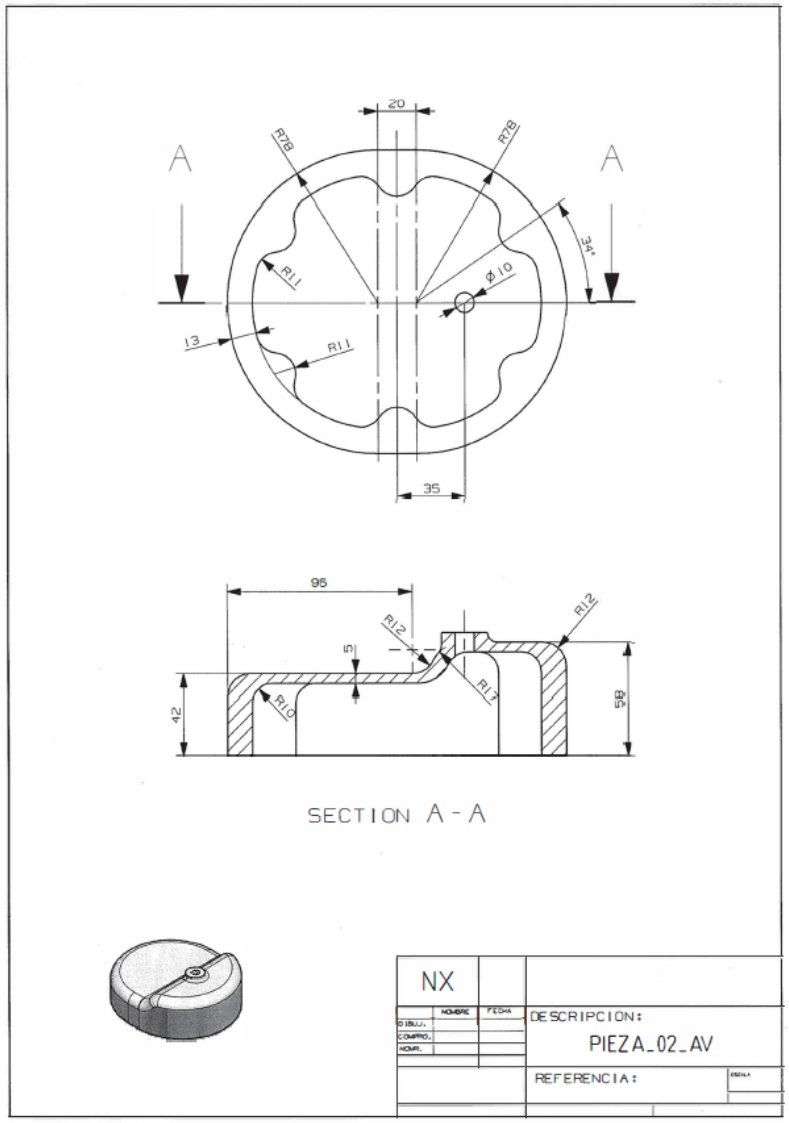
20
A
A
R78
R78
34°
R11
Ø10
13
R11
35
95
R12
R12
5
R13
R10
42
58
SECTION A - A
NX
DESCRIPCION:
PIEZA_02_AV
REFERENCIA:

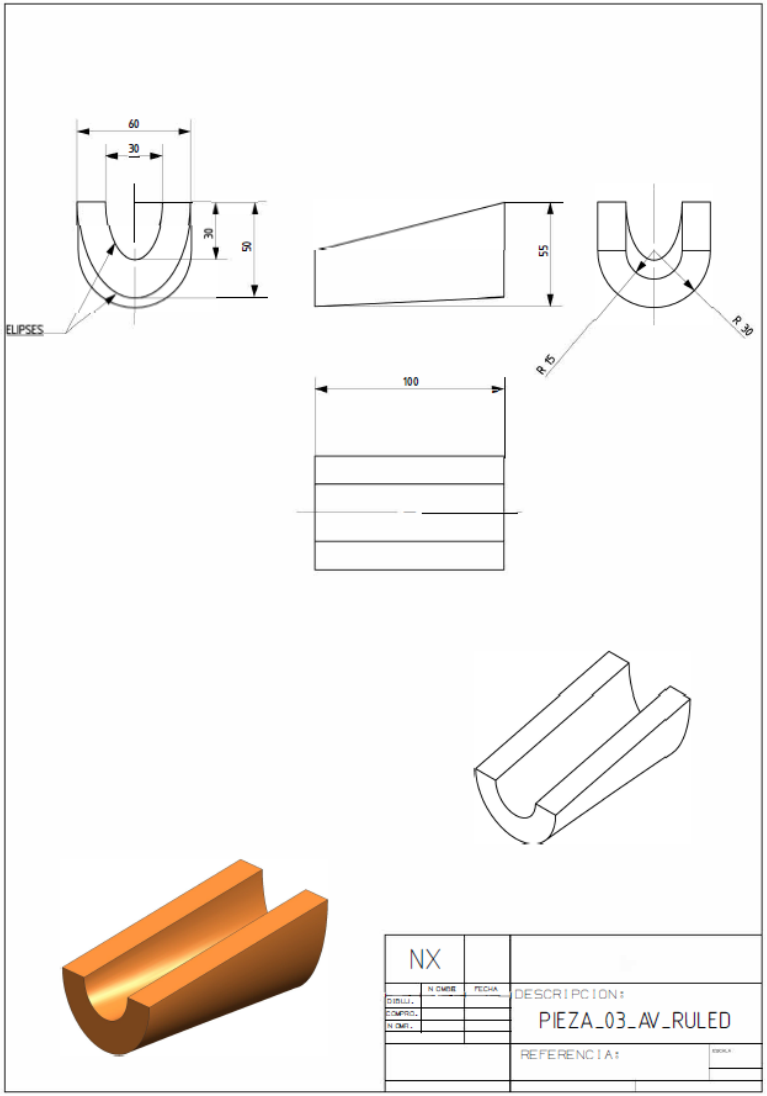
60
30
30
50
ELIPSES
55
R 30
R 15
100
NX
DESCRIPCION:
PIEZA_03_AV_RULED
REFERENCIA:

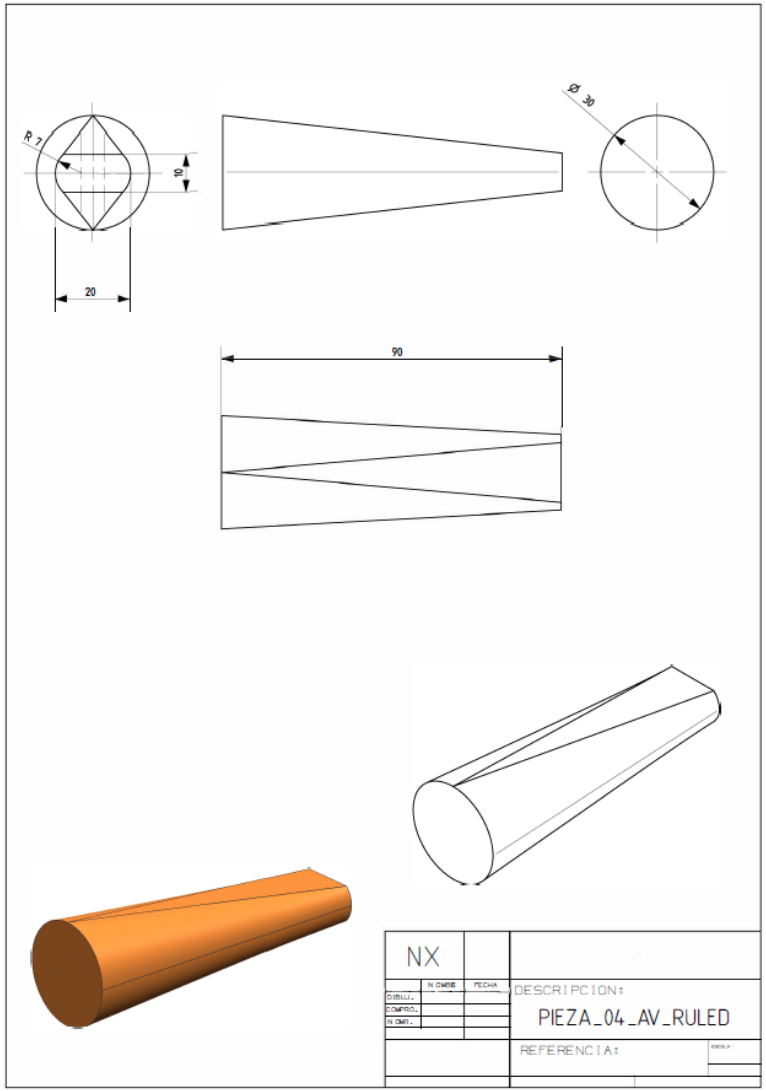
R 7
10
20
Ø 30
90
NX
DESCRIPCION:
PIEZA_04_AV_RULED
REFERENCIA:

Advanced design with NX 12

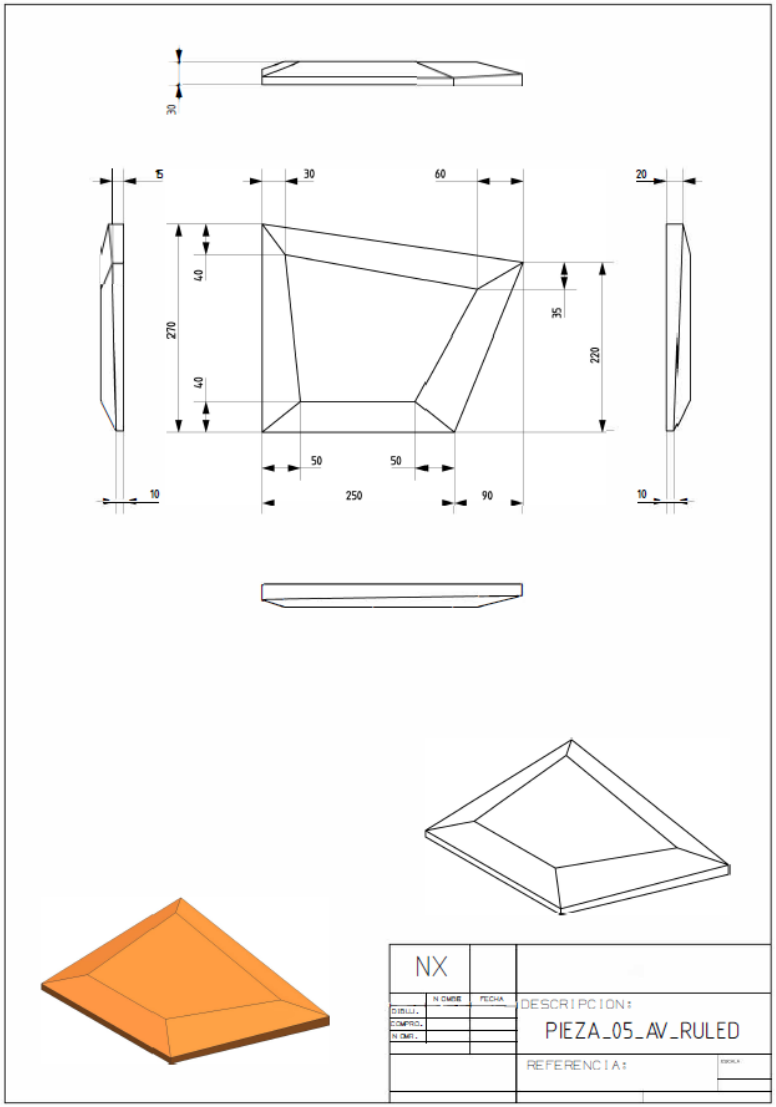

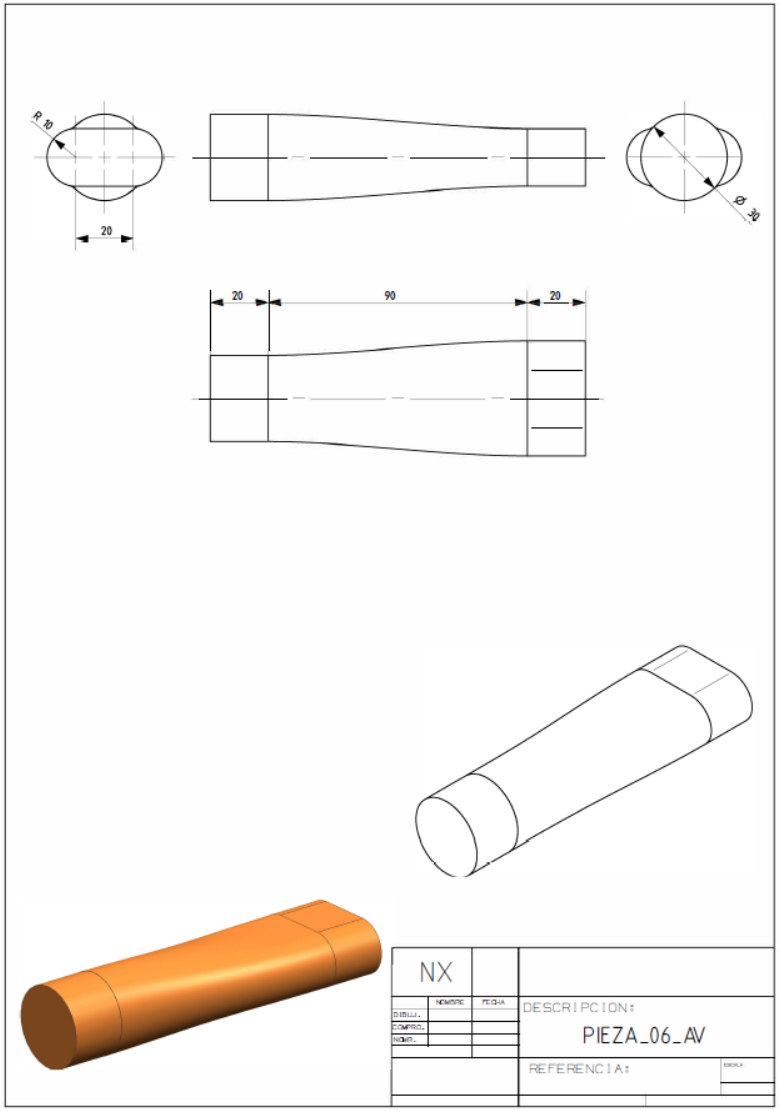

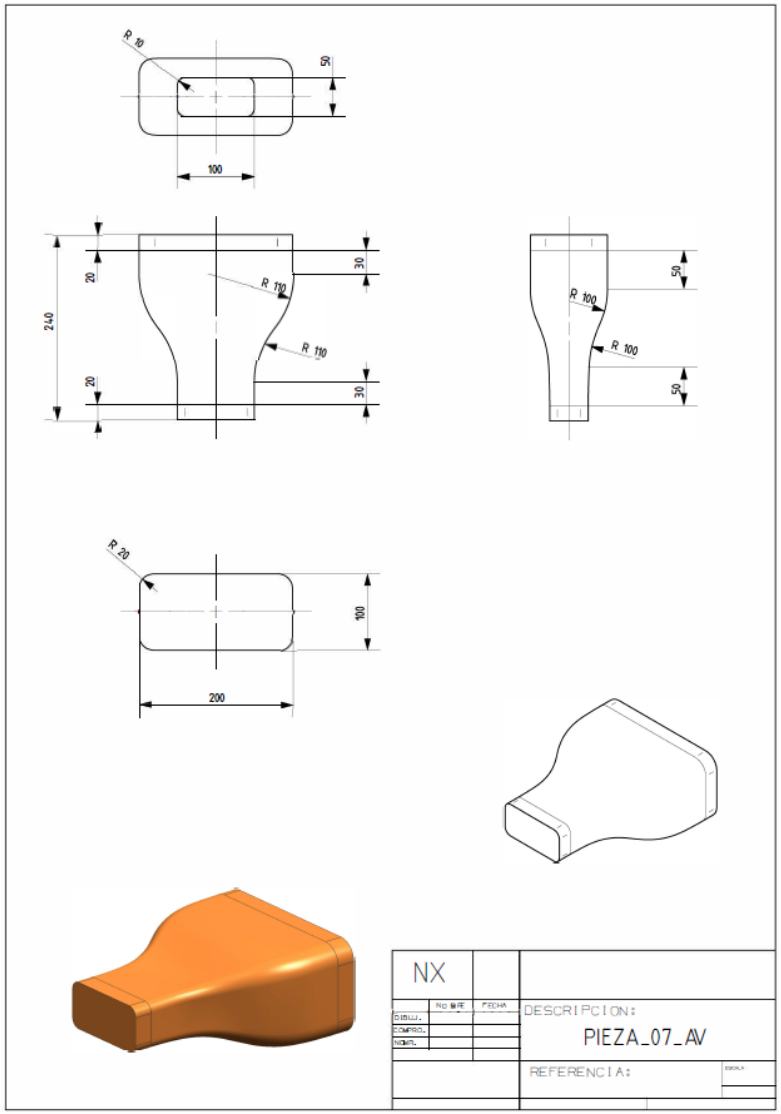
R 10
50
100
20
240
20
30
R 110
R 110
30
R 100
R 100
50
50
R 20
100
200
NX
DESCRIPCION:
PIEZA_07_AV
REFERENCIA:

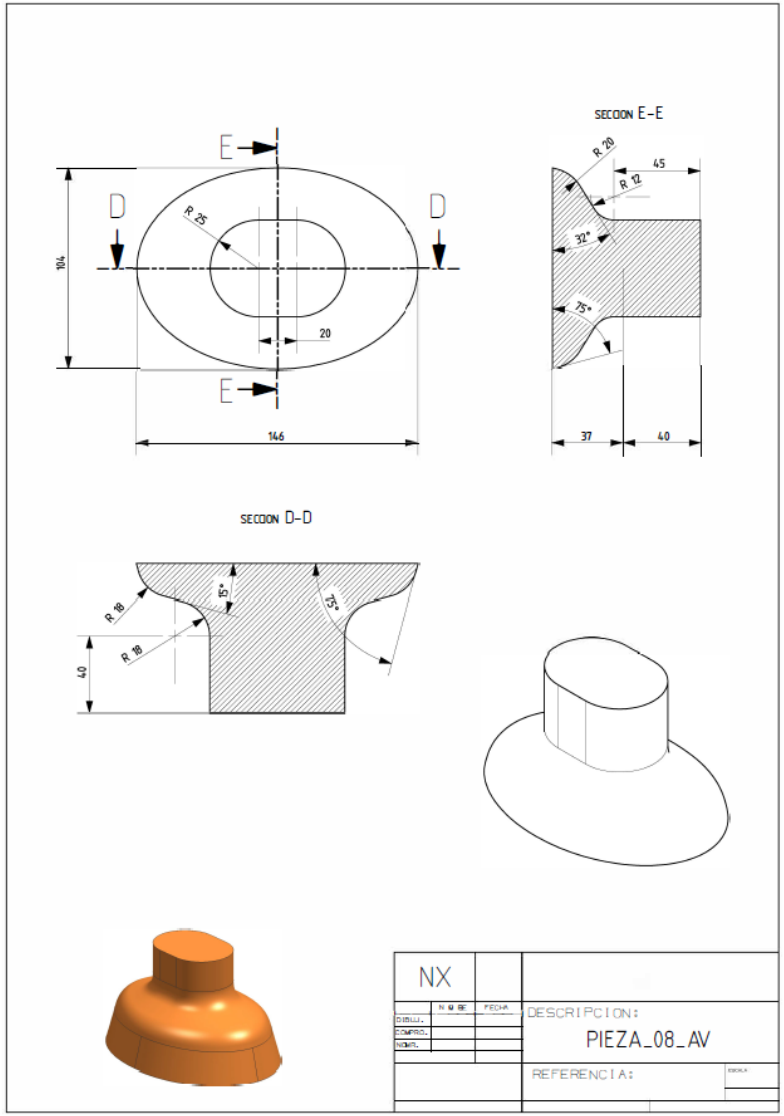
SECCION E-E
E
D
D
E
R 25
104
20
146
R 20
45
R 12
32°
75°
37
40
SECCION D-D
R 18
R 18
15°
75°
40
NX
DESCRIPCION:
PIEZA_08_AV
REFERENCIA:

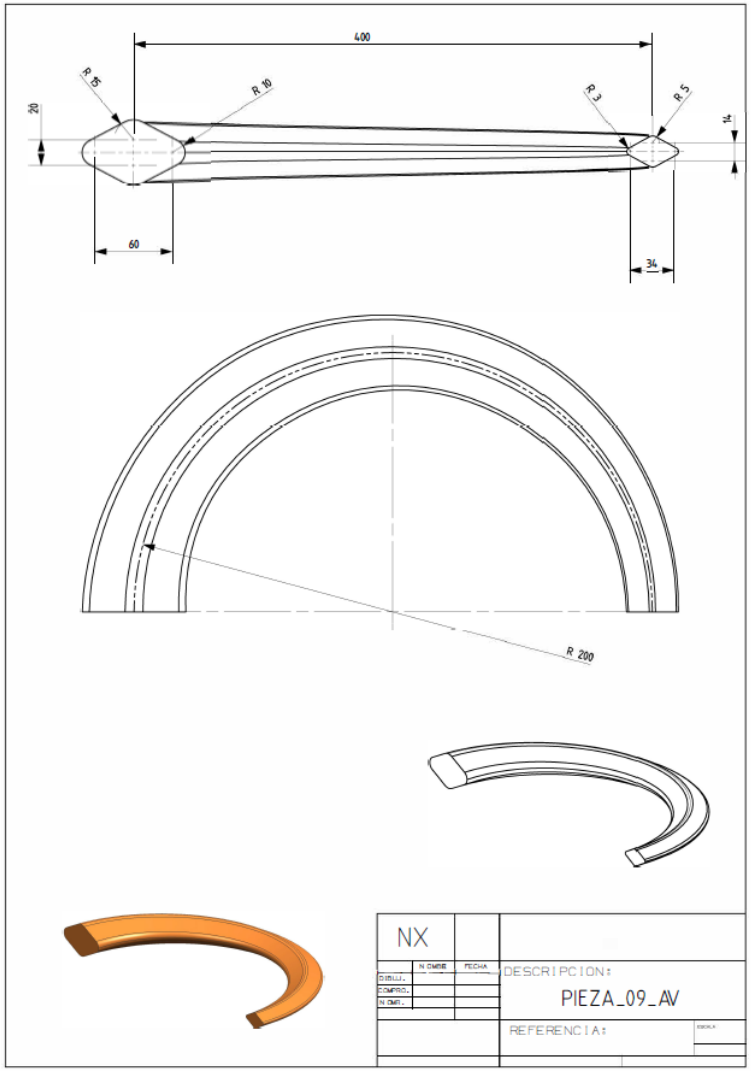
400
R 05
R 10
R 3
R 5
20
14
60
34
R 200
NX
DESCRIPCION:
PIEZA_09_AV
REFERENCIA:

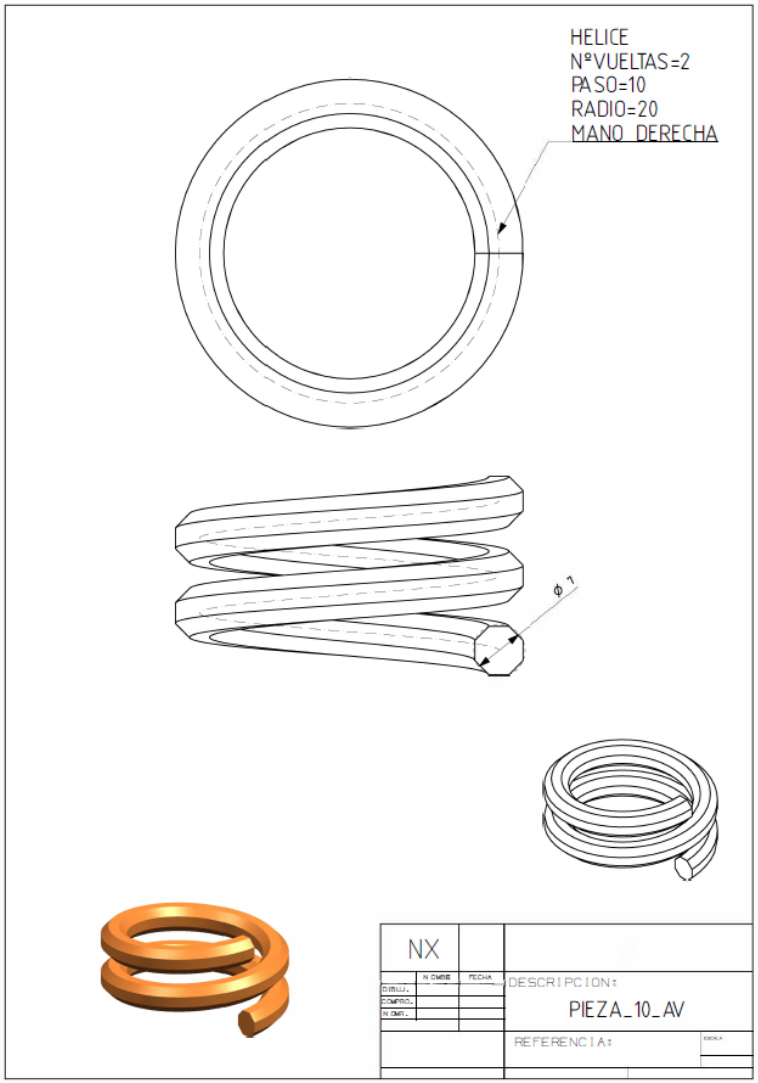
HELICE
NºVUELTAS=2
PASO=10
RADIO=20
MANO DERECHA
Ø 7
NX
DESCRIPCION:
PIEZA_10_AV
REFERENCIA:

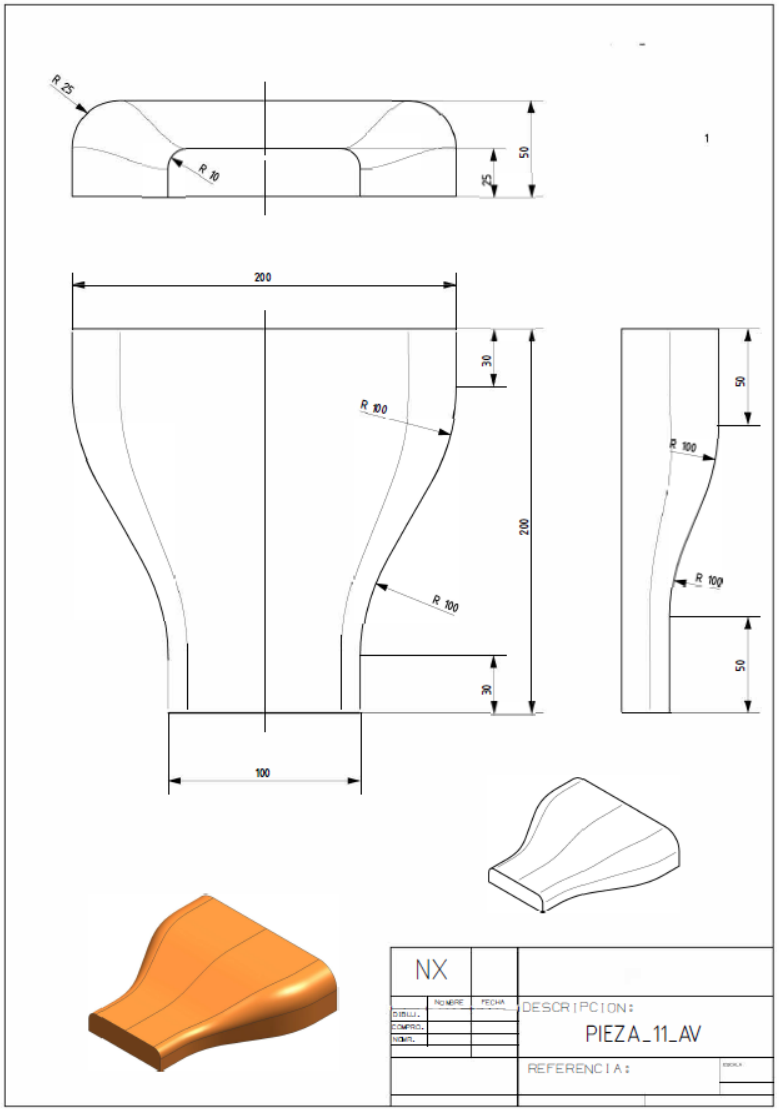
R 25
R 10
50
25
1
200
30
R 100
200
R 100
30
100
50
R 100
R 100
50
NX
NOMBRE
FECHA
DISEÑ.
COMPRO.
NORM.
DESCRIPCION:
PIEZA_11_AV
REFERENCIA:

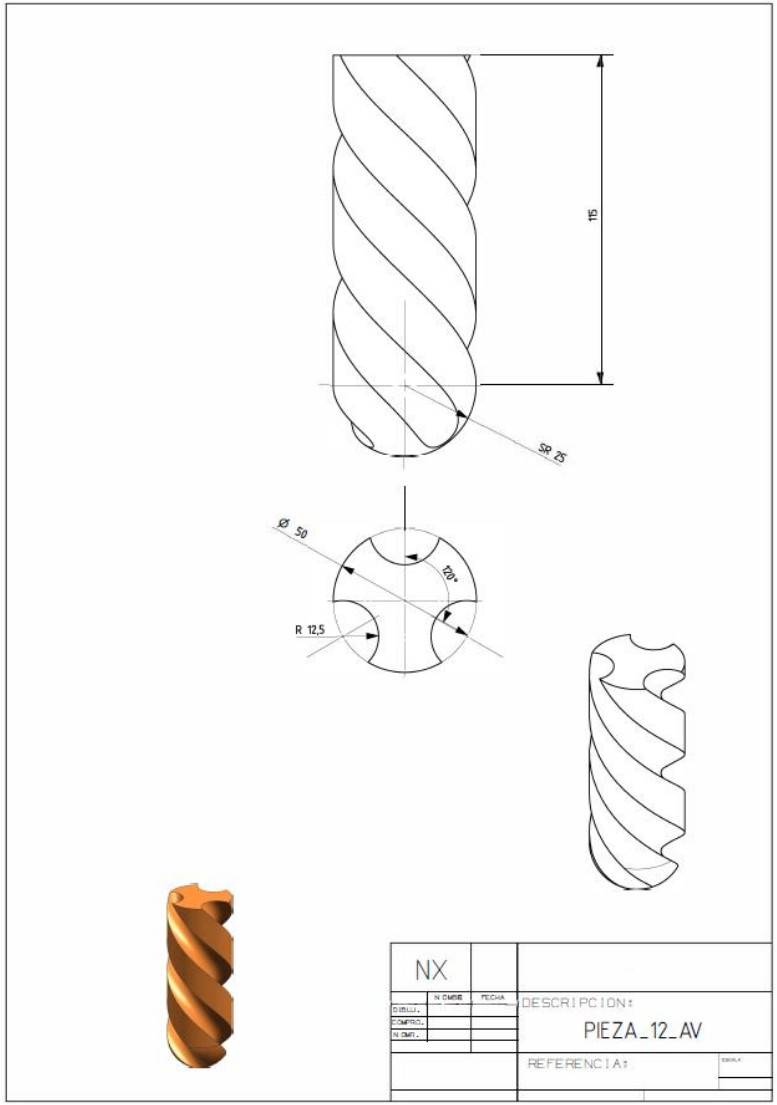
115
SR 25
Ø 50
120°
R 12,5
NX
N OMBRE
FECHA
DISEÑ.
COMPRO.
N OMR.
DESCRIPCION:
PIEZA_12_AV
REFERENCIA:

Advanced design with NX 12

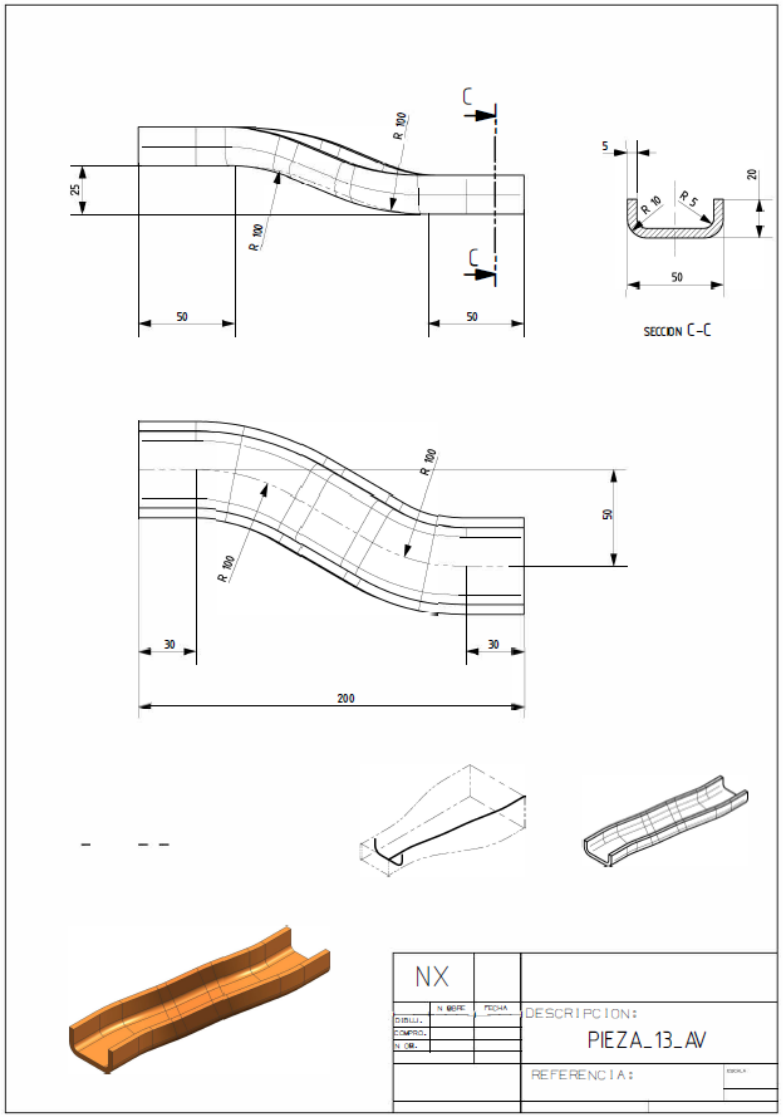

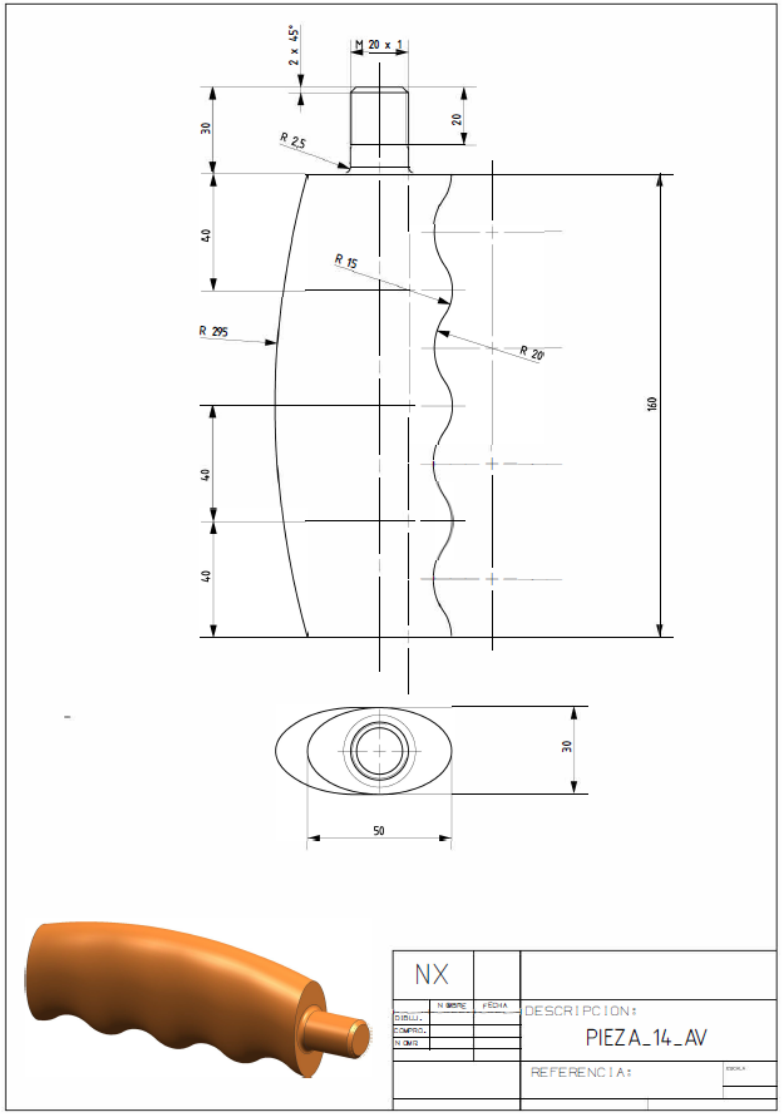

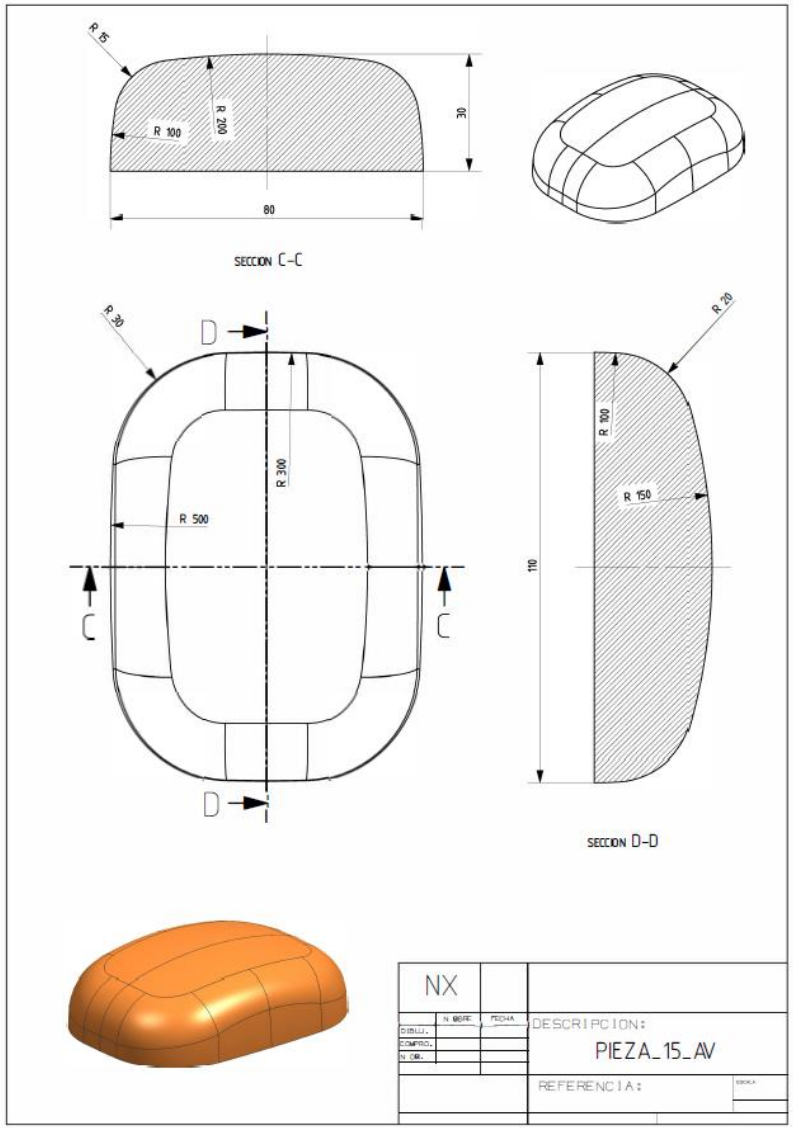
R 15
R 100
R 200
30
80
SECCION C-C
R 20
D
R 300
R 500
C
C
D
R 20
R 100
R 150
110
SECCION D-D
NX
DESCRIPCION:
PIEZA_15_AV
REFERENCIA:

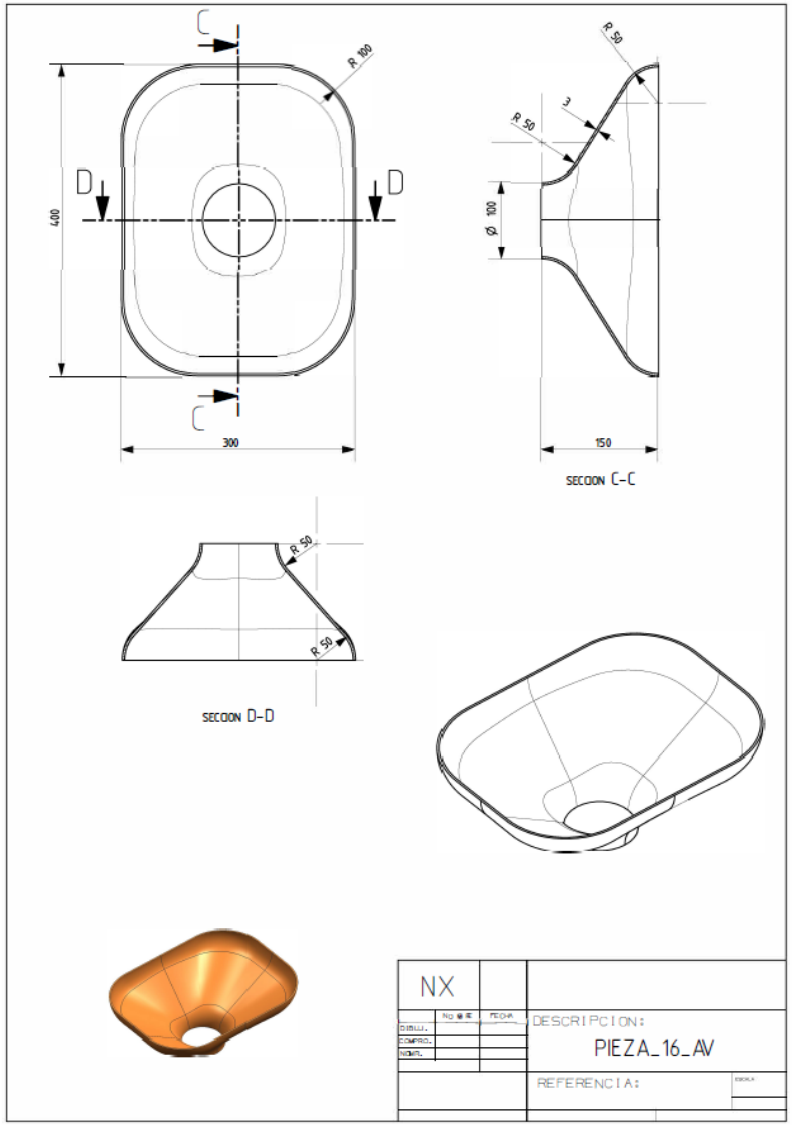
C
R 100
D
D
400
C
300
R 50
R 50
3
Ø 100
150
SECCION C-C
R 50
R 50
SECCION D-D
NX
DESCRIPCION:
PIEZA_16_AV
REFERENCIA:

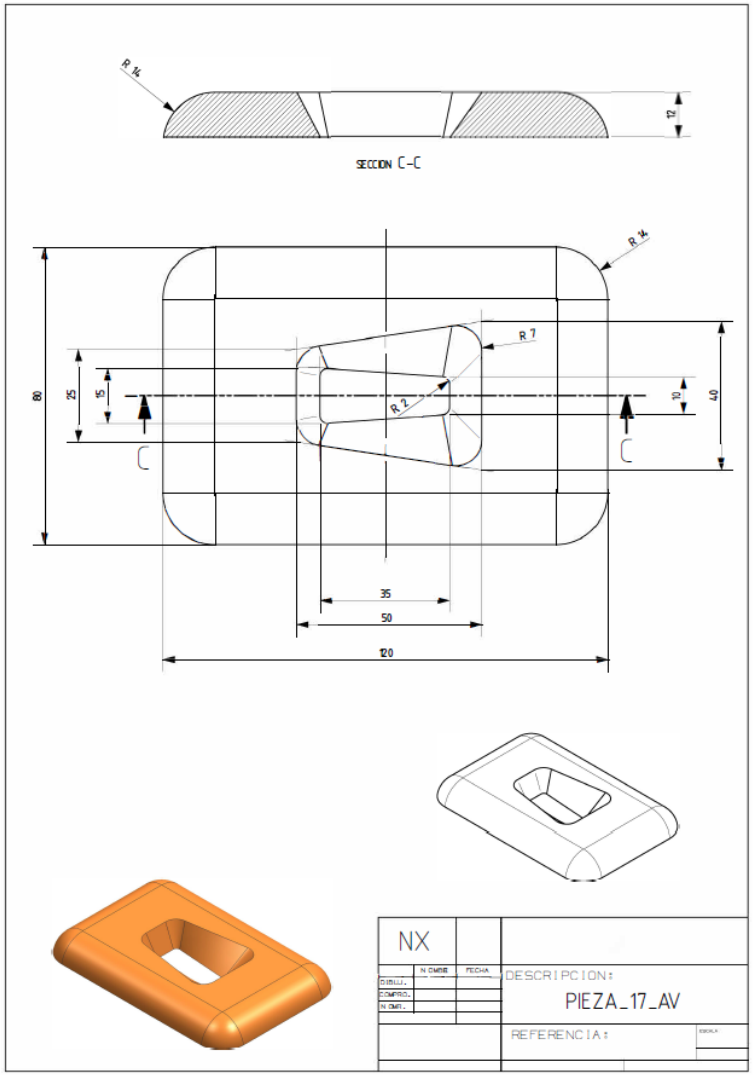
R 14
12
SECCION C-C
R 14
R 7
R 2
80
25
15
10
40
35
50
120
NX
DESCRIPCION:
PIEZA_17_AV
REFERENCIA:

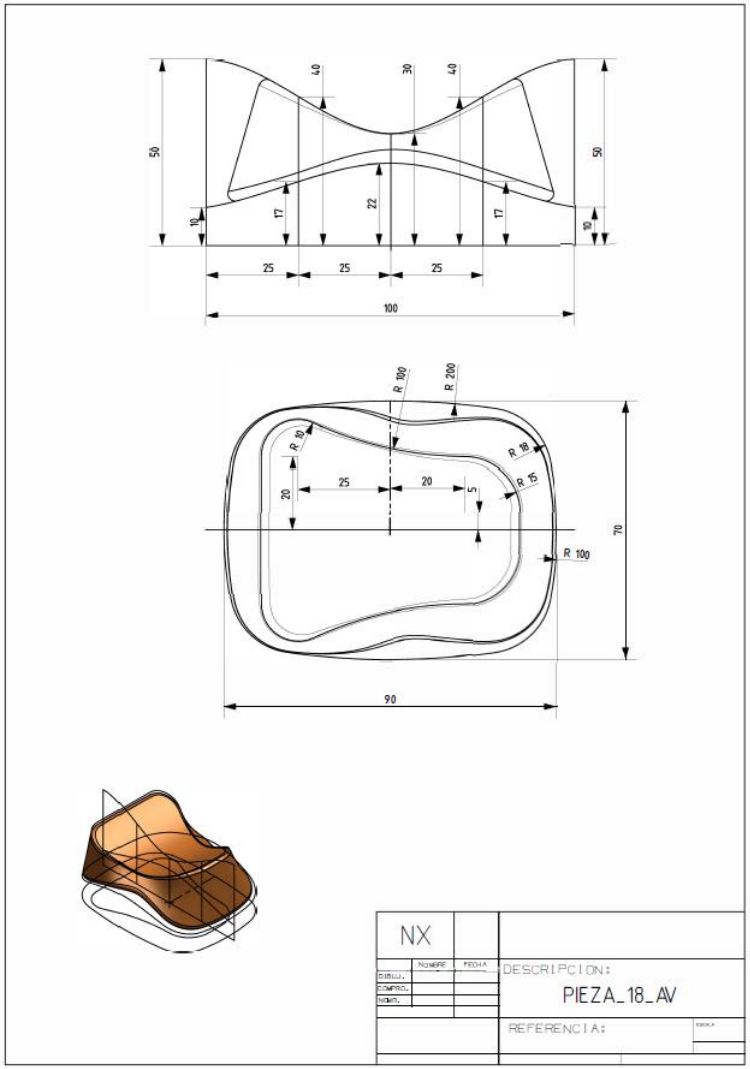
40
30
40
50
50
10
17
22
17
10
25
25
25
100
R 100
R 200
R 10
R 18
R 15
20
25
20
5
70
R 100
90
NX
DESCRIPCION:
PIEZA_18_AV
REFERENCIA:

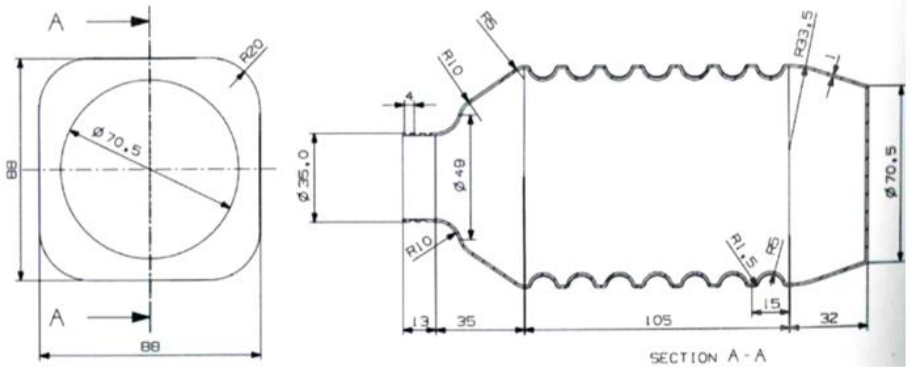
A
R20
Ø 70,5
88
A
88
R5
R10
4
Ø 35,0
Ø 49
R10
R23,5
1
Ø 70,5
R1,5
R5
13
35
105
15
32
SECTION A-A

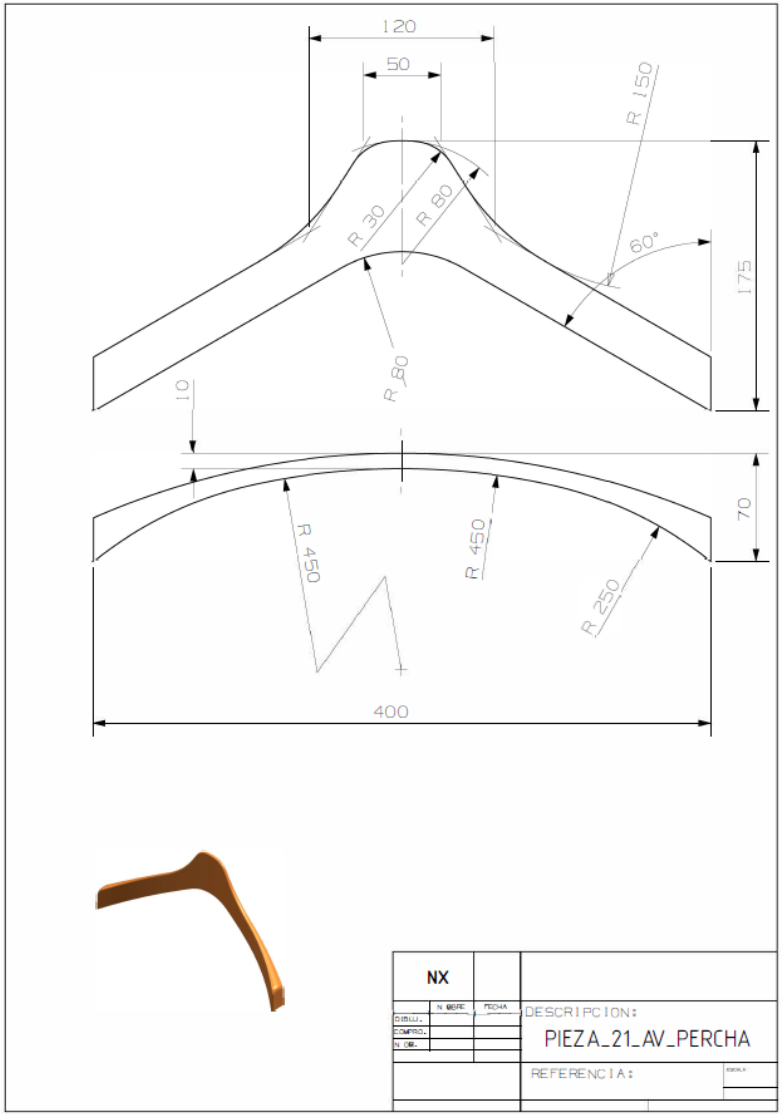
120
50
R 150
R 30
R 80
60°
175
R 80
10
70
R 450
R 450
R 250
400
NX
DESCRIPCION:
PIEZA_21_AV_PERCHA
REFERENCIA:

Advanced design with NX 12

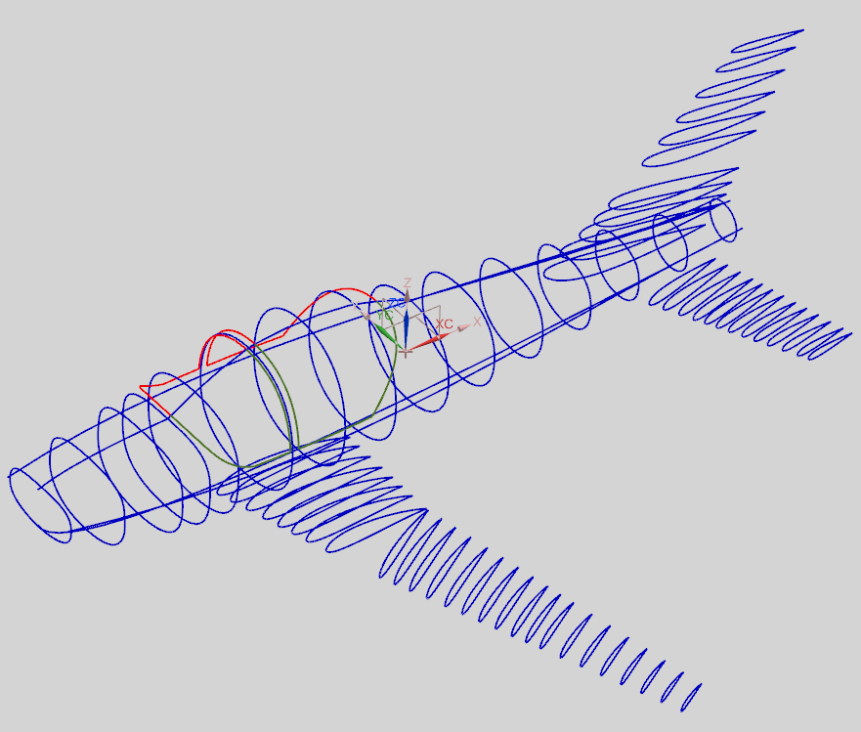

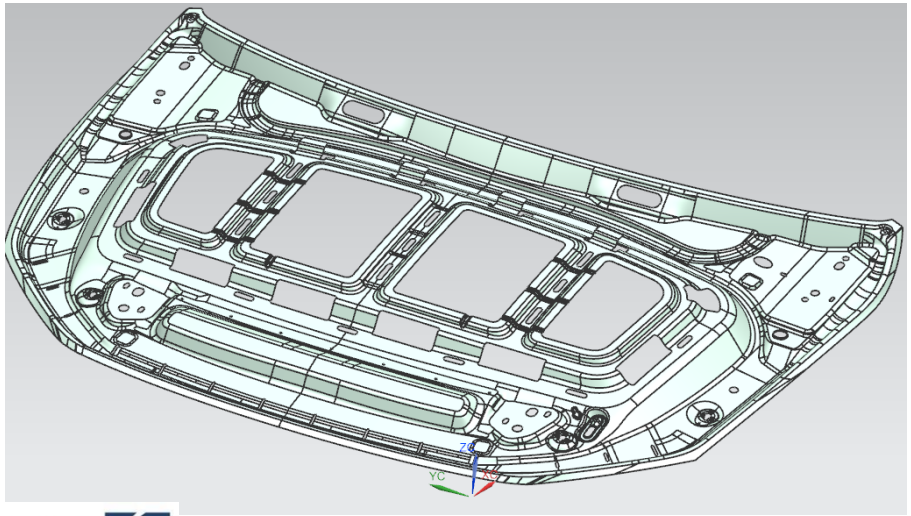

STAMPING & TRIMMING DIES

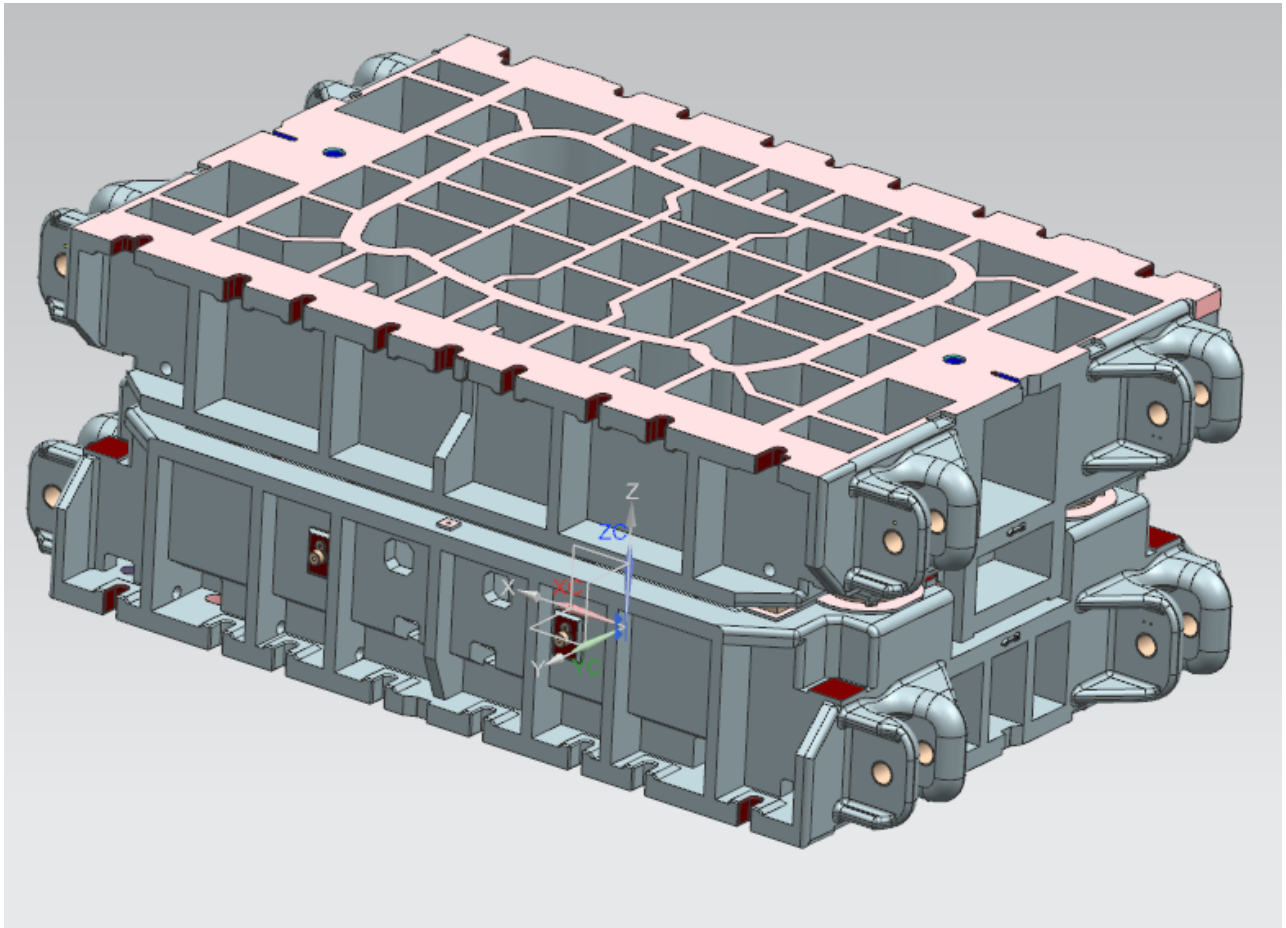

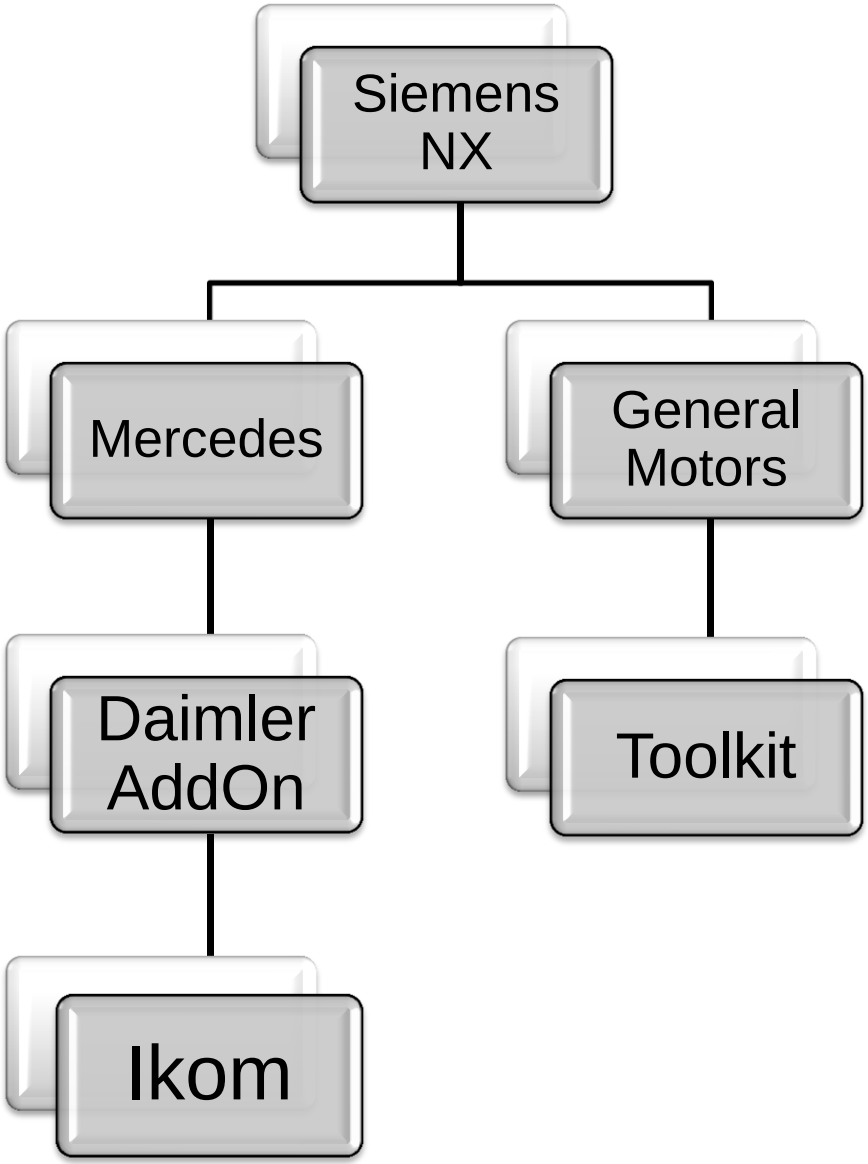
Siemens NX
Mercedes
General Motors
Daimler AddOn
Toolkit
Ikom

When you install the daimler addon pack and the ikom you will see that in the interface you will have more tabs that there weren't there before.

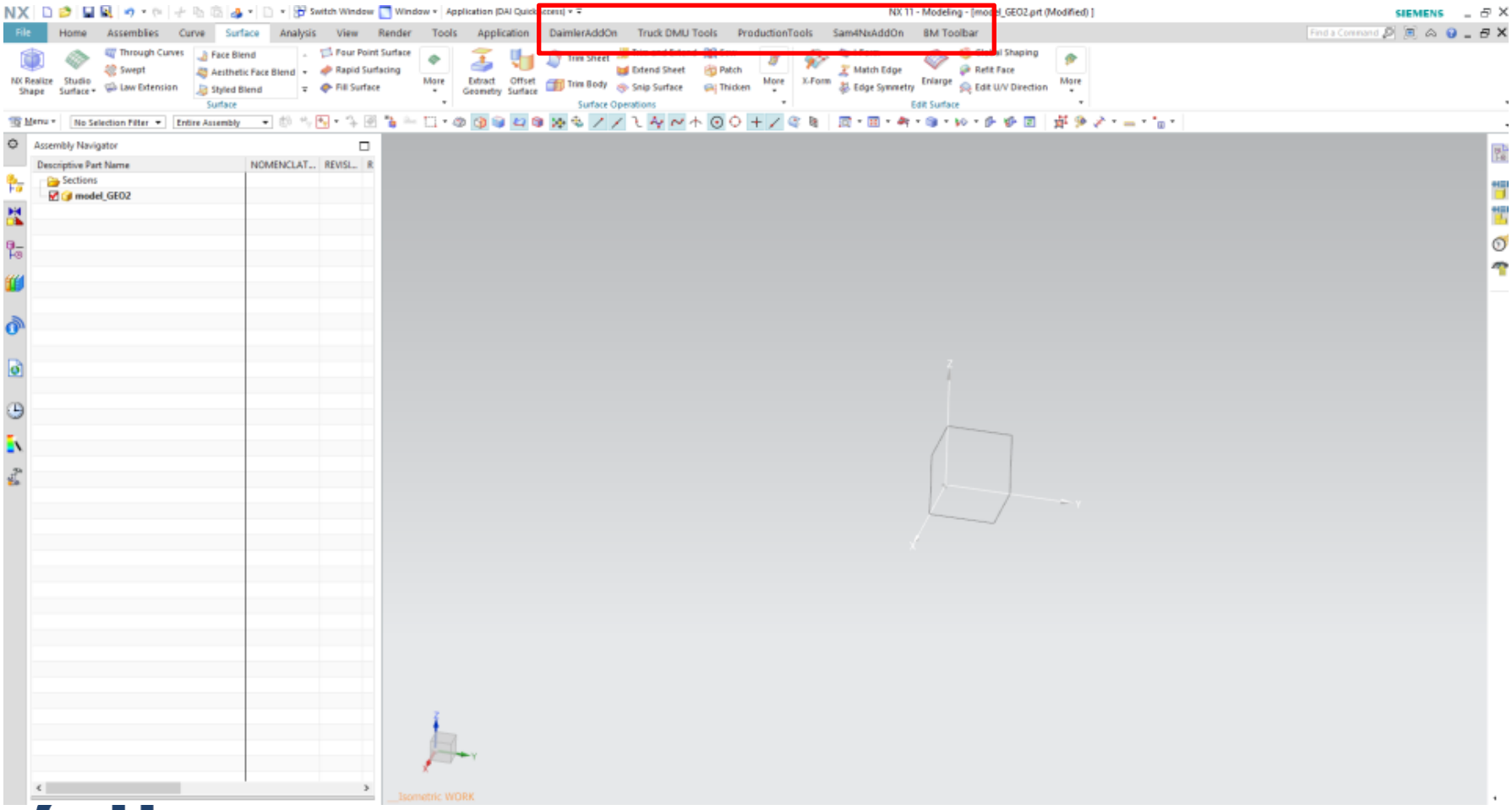

One of the most used tool bar is the production tools, but this bar is mainly used for welding fixtures, so is not going to be teached in this curse.

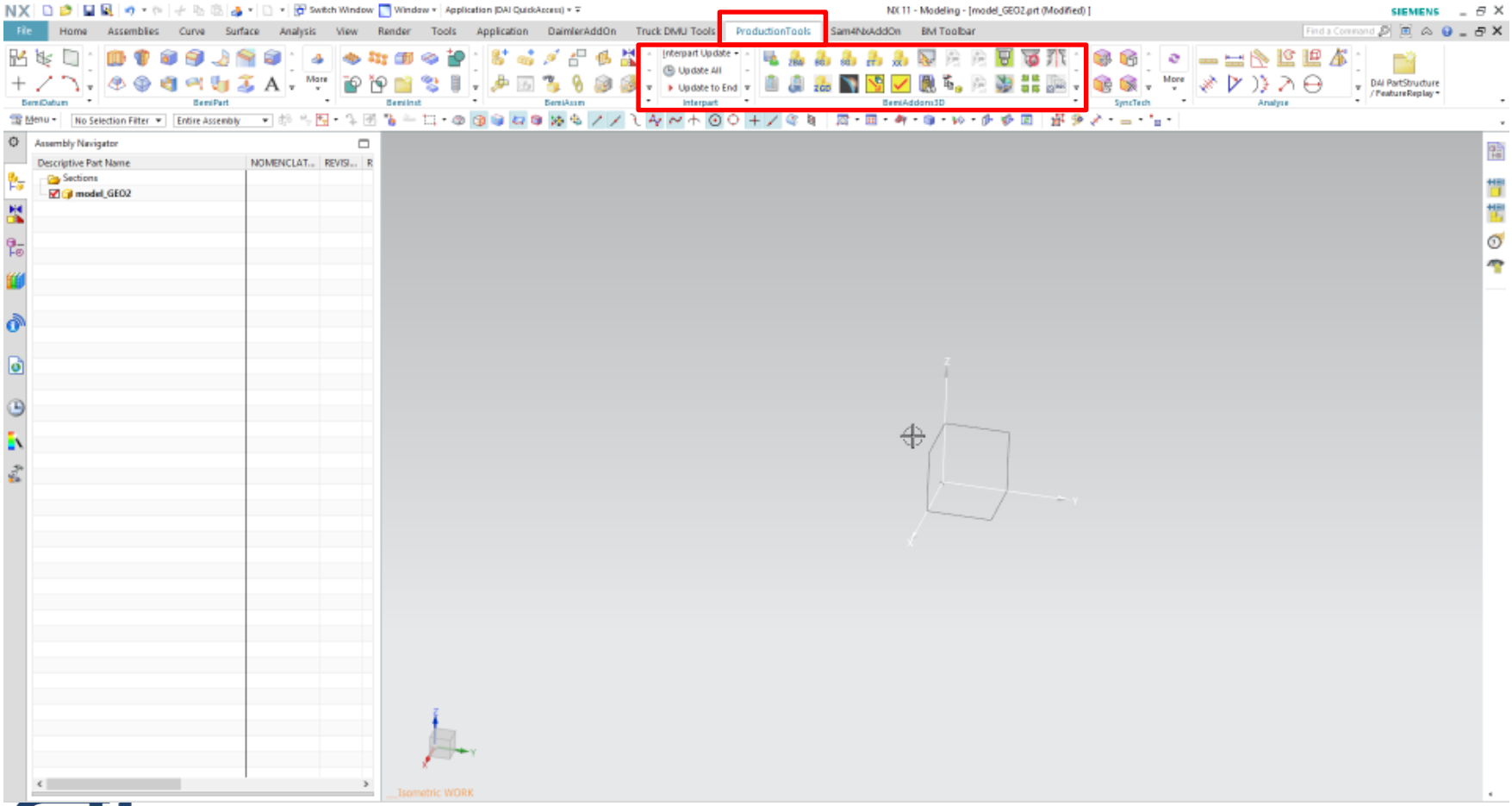

Instead, you have to go to the BM toolbar, and there you will find the ikom tool. The ikom is the tool of mercedes to make any type of dies, is an external aplication which has his own data base with the apropiate standars and his own tree structure.

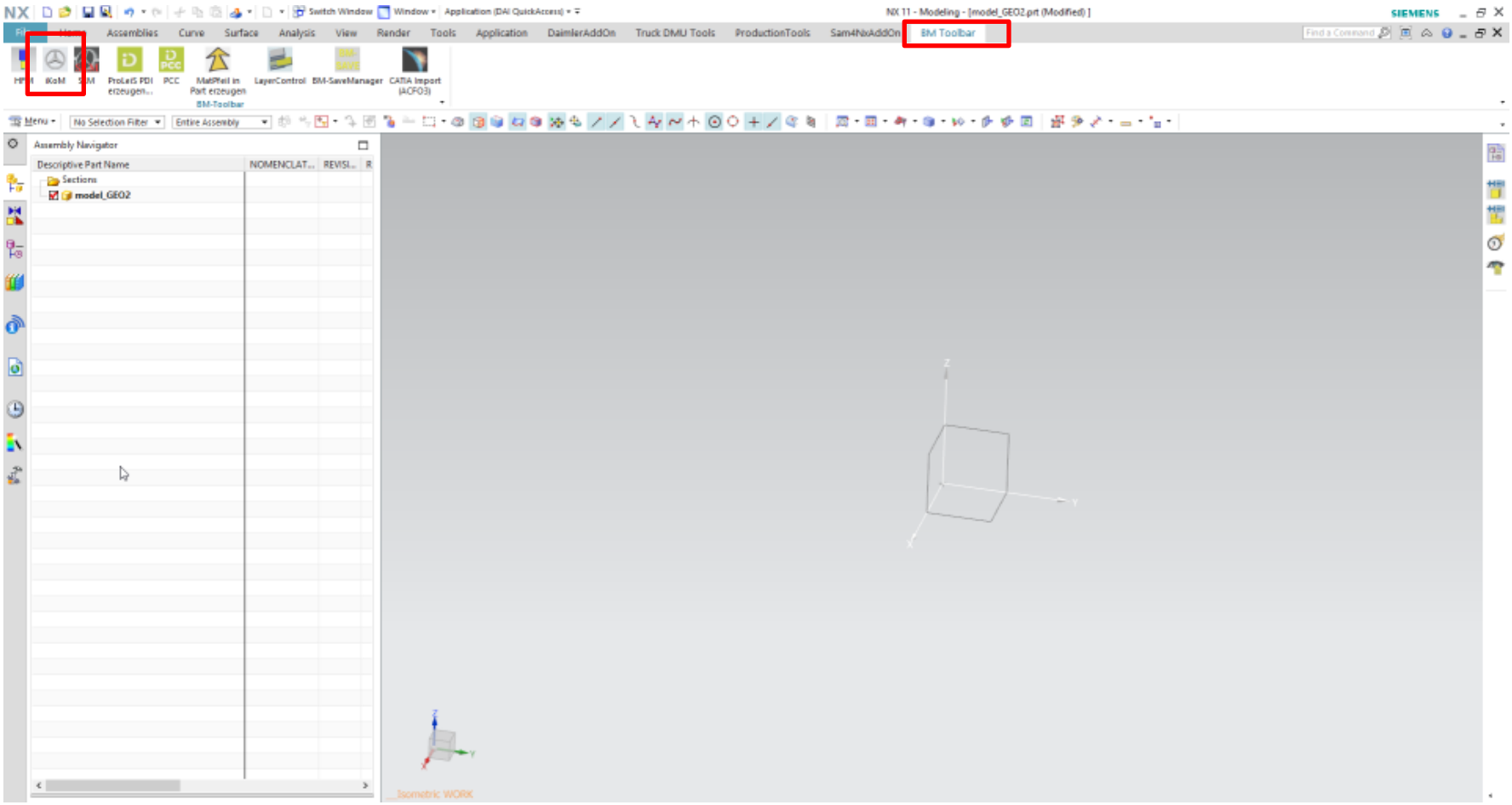

When you press the icon the main menu will pop-up

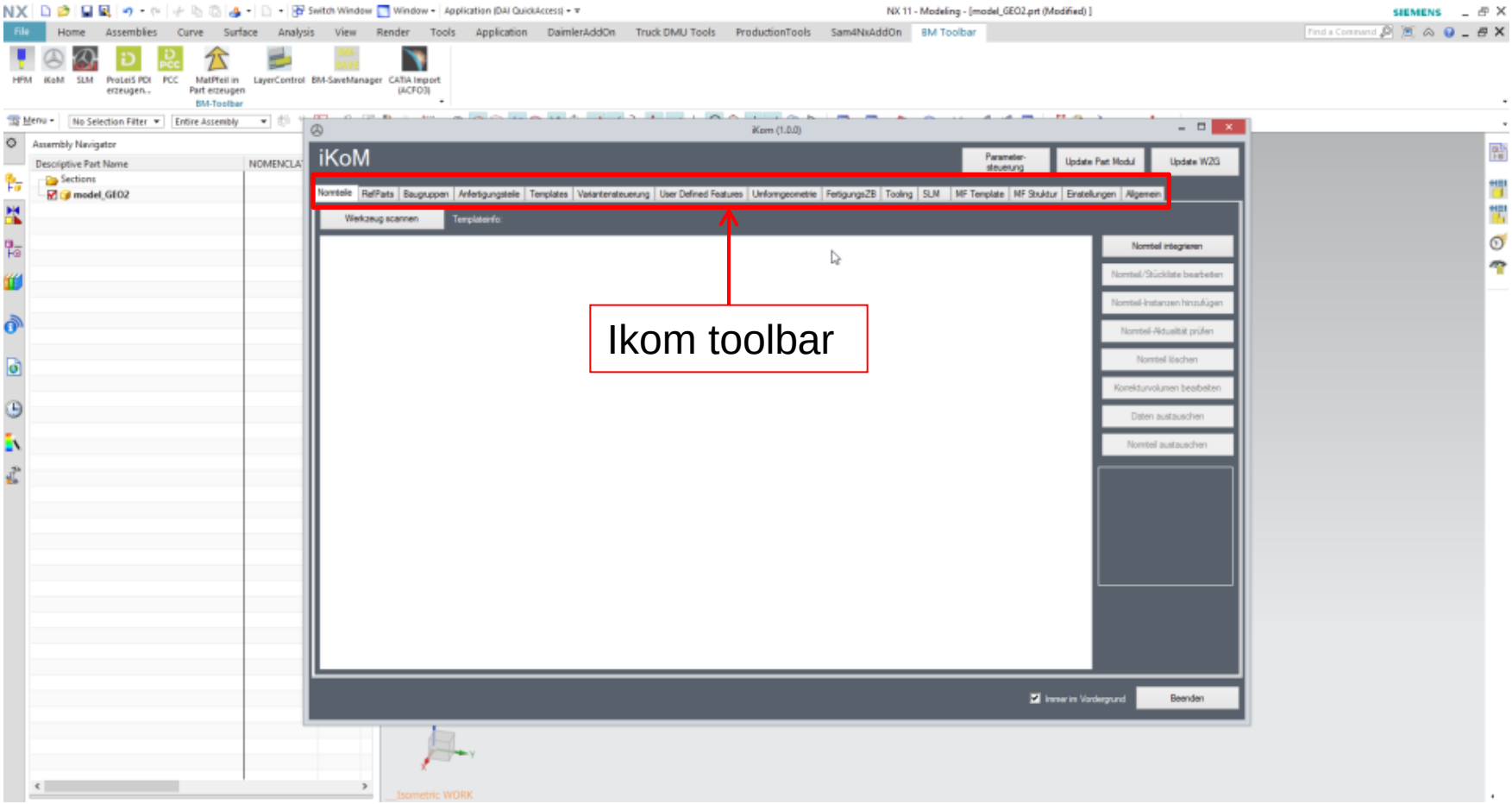

The program by default is in german, to change de lenguage to english, and to select two more general setting, so the program runs correctly you will have to go to the next tab.

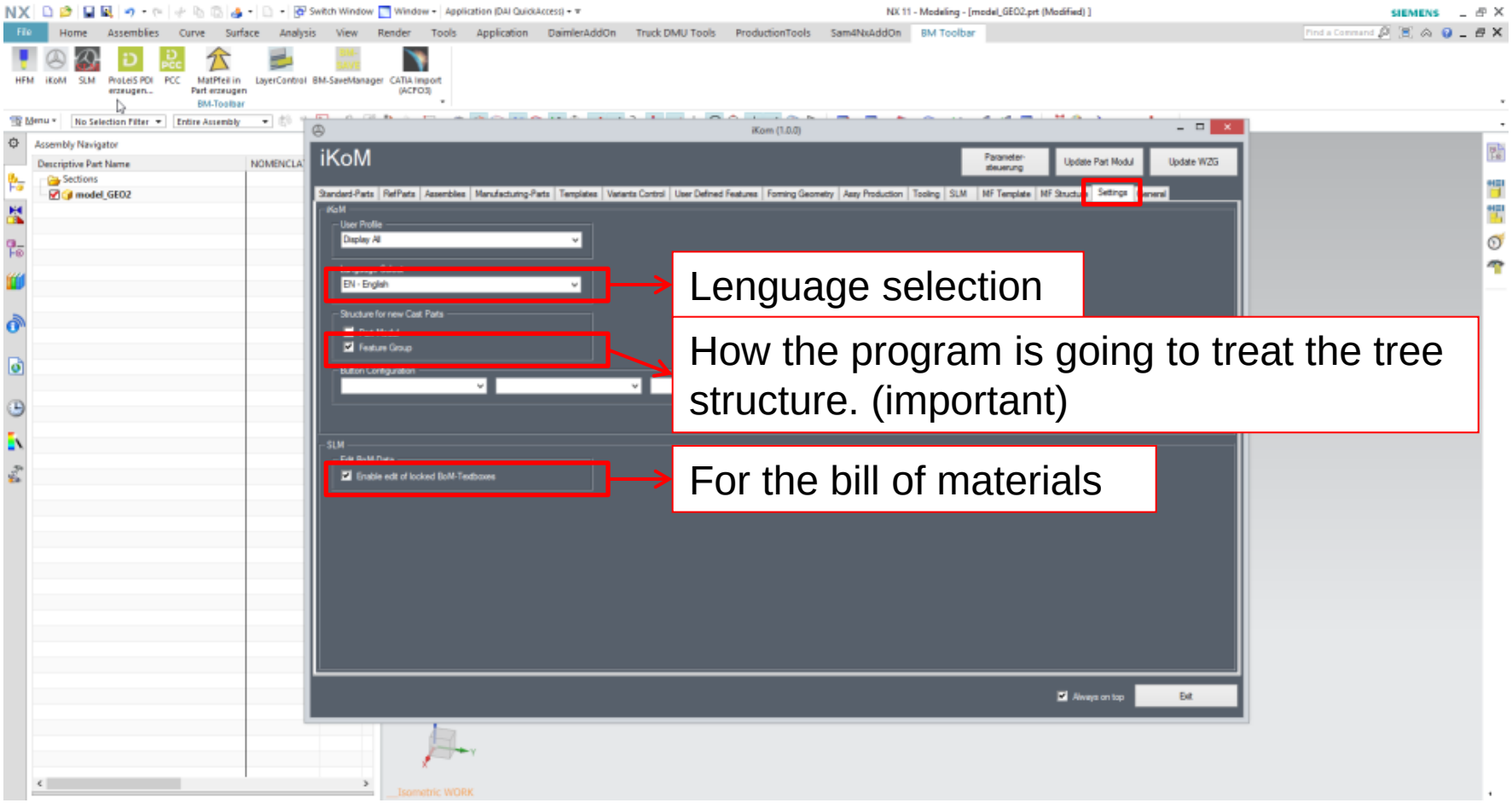

To start a new project, you will have to go to the templates tab, there you will choose your saving path, and also the type of operation that your die is going to be. If you are going to do an stamping die and is the second operation you will have to choose OP20 Ziehwerkzeug and the project number (13digits). After selecting thoose things and clicking the create template button, the program automaticaly is going to generate a generic tree structure, with the adapter, a lower and an upper base.

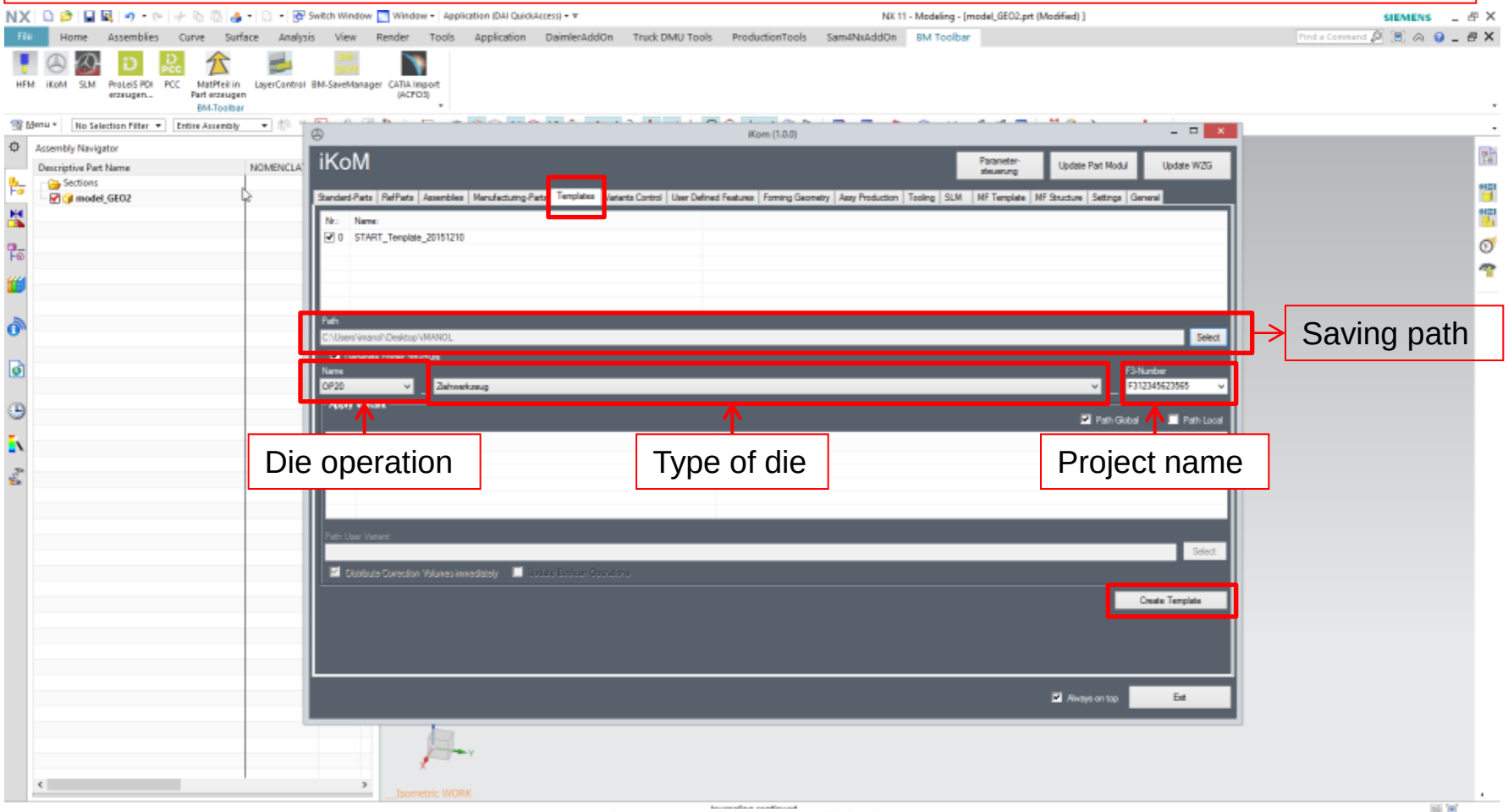

Generic tree structure

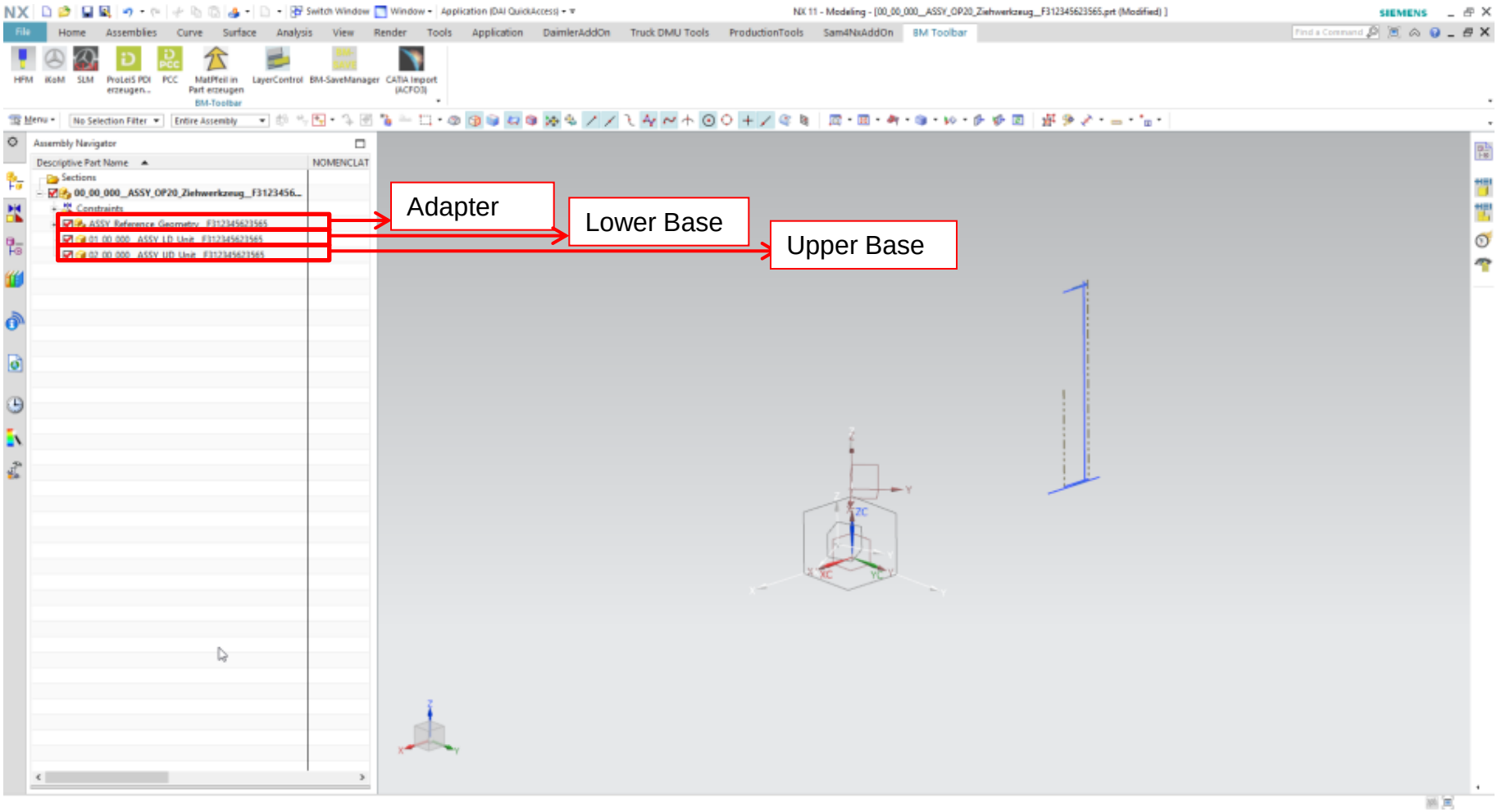

After creating the template if you press the ikom button again you will return to the menu, and you will see your tree structure. From now on the 2 important tabs that you will be working with, are the first two. Standar parts and reference parts. The stándar parts are pre-made models in the internal ikom library. The reference parts, also are pre-made models in the library but you will insert them as a base, and you will modify that geometry until you obtain the geometry you need.

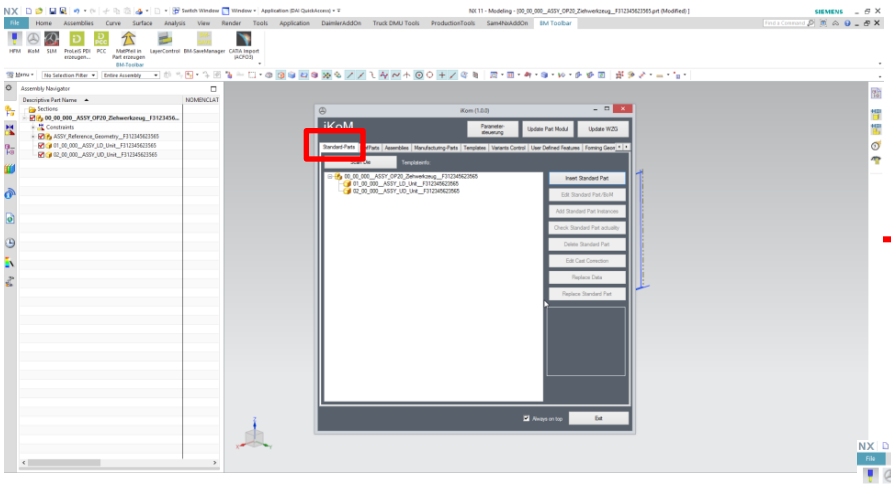

Estándar parts

Reference parts

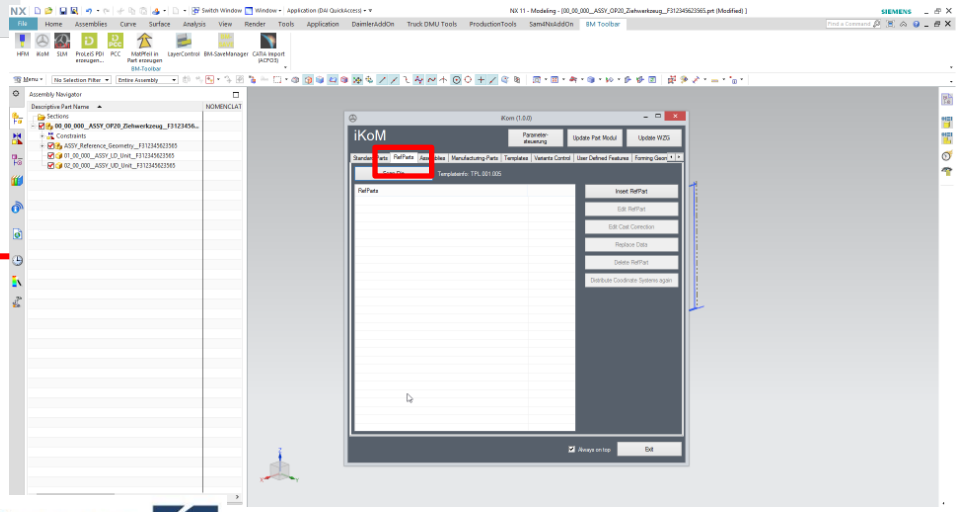

Inside the reference parts tab you will find upper and lower base models, draw punch models and more. To select one of them you have to dubble click in the picture. The program will do his things and is going to insert the bases in the apropiate places in the tree structure.

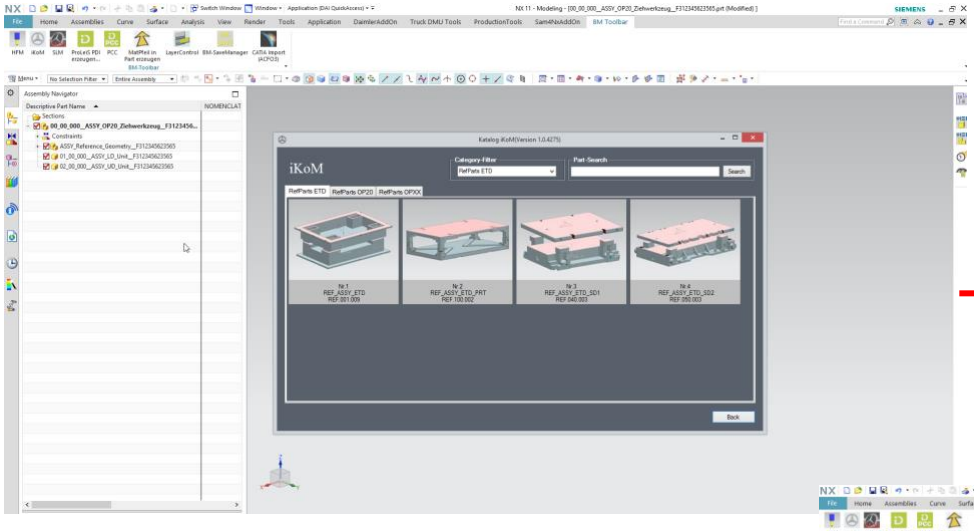

Base models

Punch models

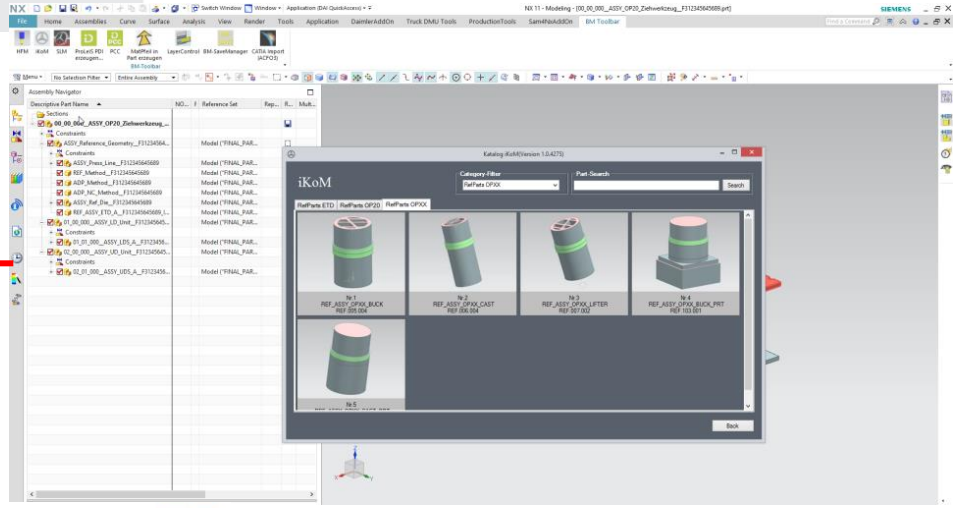

There is a lower and upper base inserted in the corresponding place in the tree structure

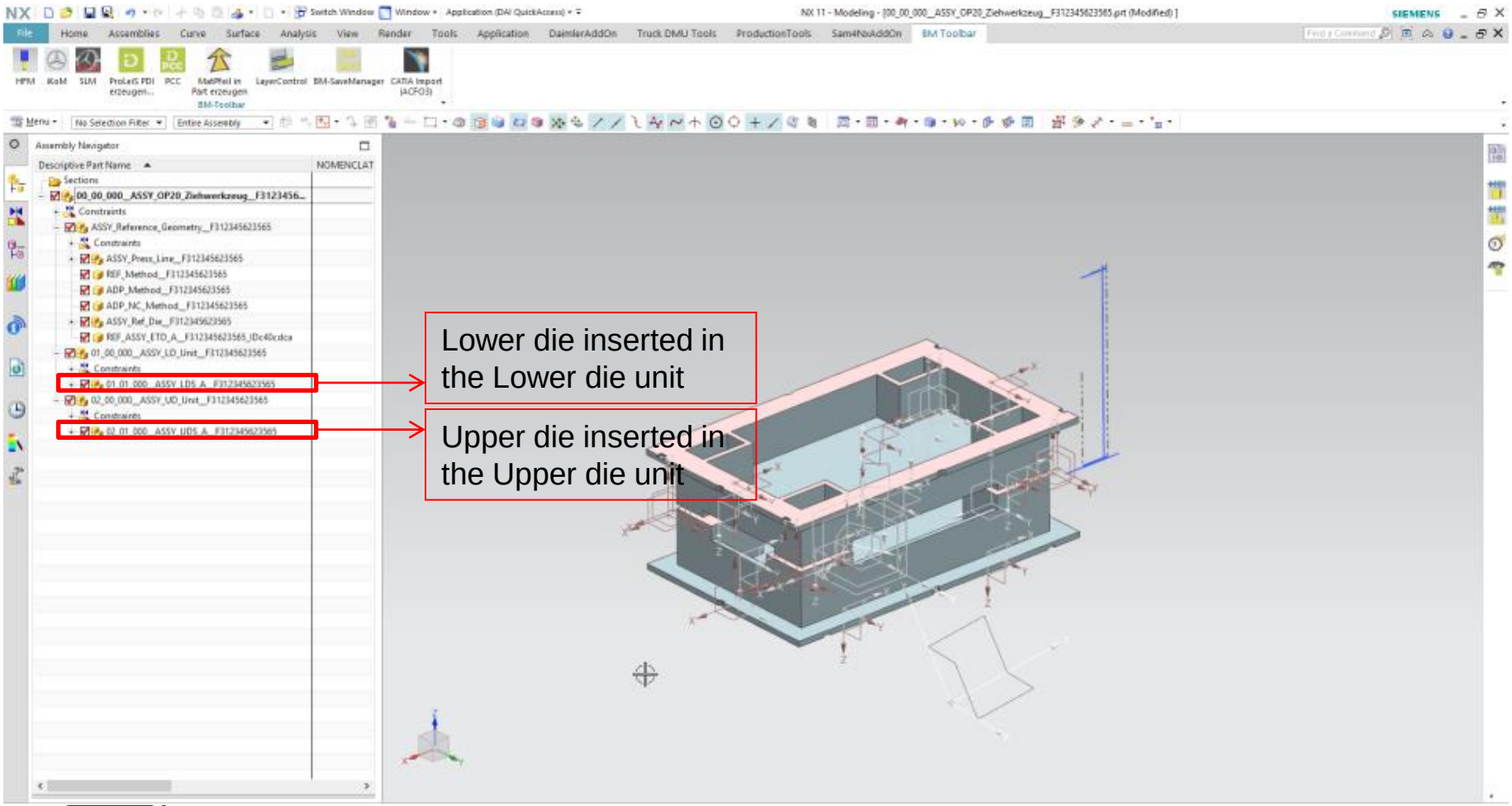

Inside All the reference parts that you insert, will have the same internal tree structure, for example in the LDS, you will have 4 components (LDS, MPT, SPT, a copy of the adapter)

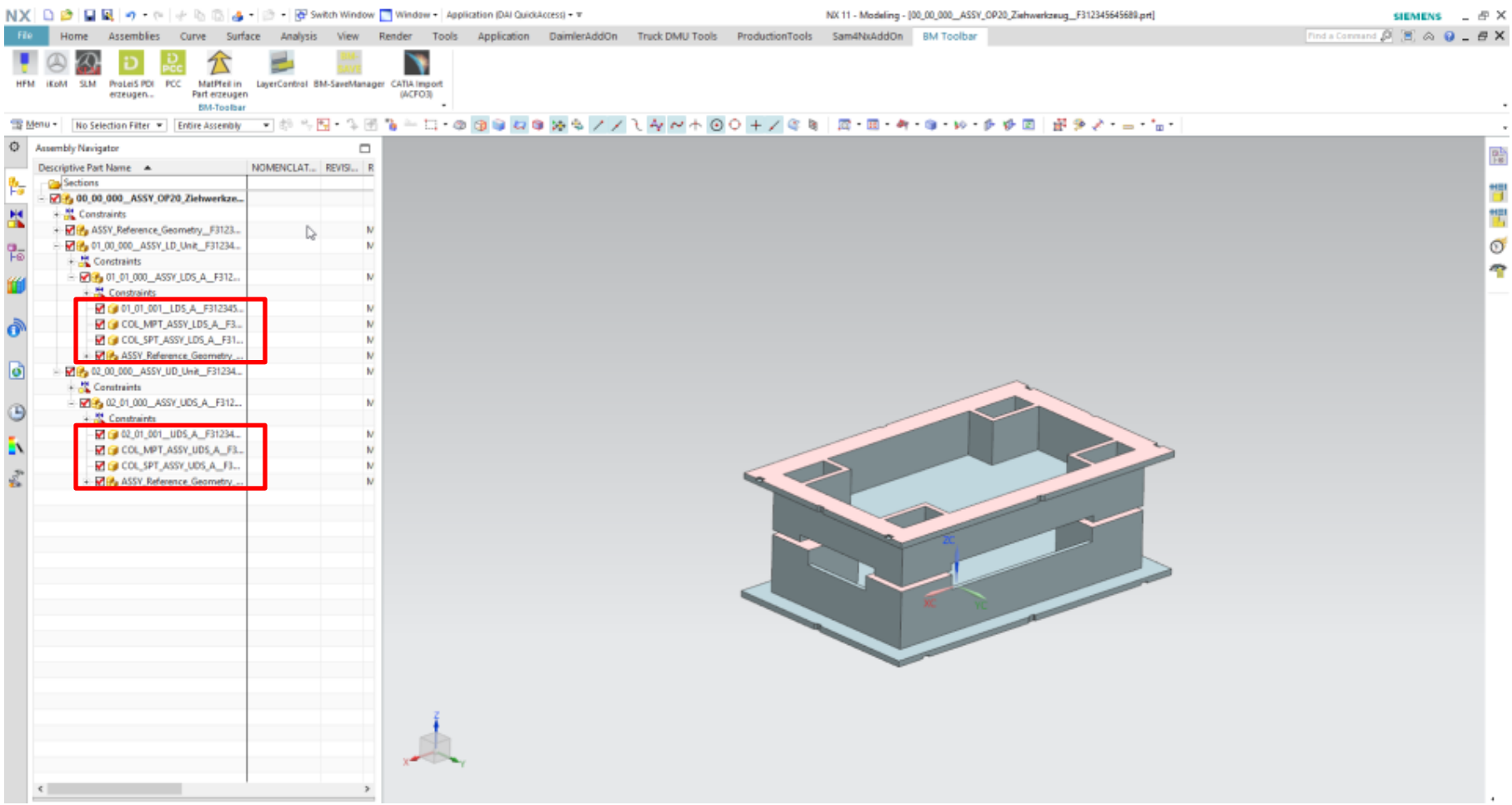

CREATING A DRAW PUNCH

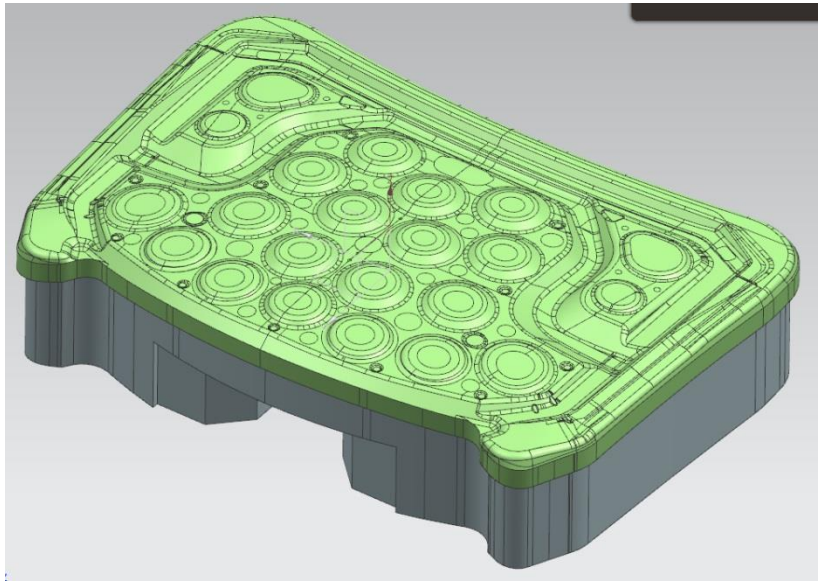

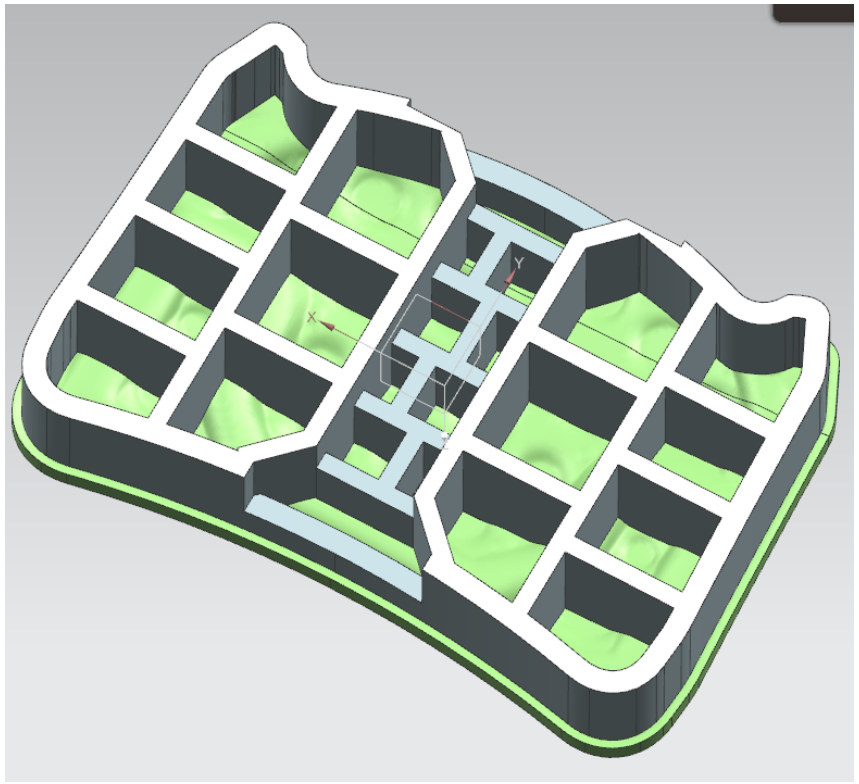

First of all you will need the surfaces and the curves that the client is going to give you in a file that it's called the method. That file is full of surfaces and curves and data, but you need to select the info you need for the opperation. In this case to generate the draw punch you will need this 3 things.

STEMPELL

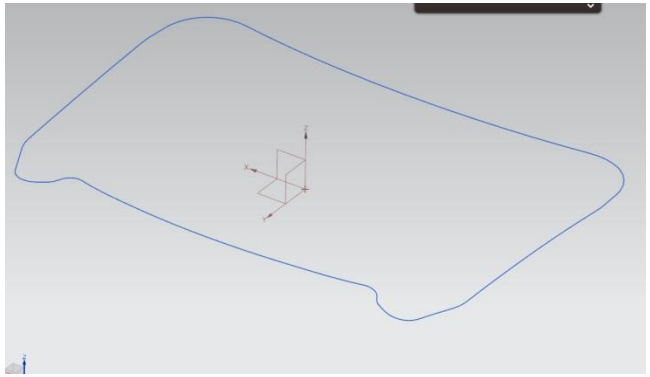

STEMPELLUMRISS

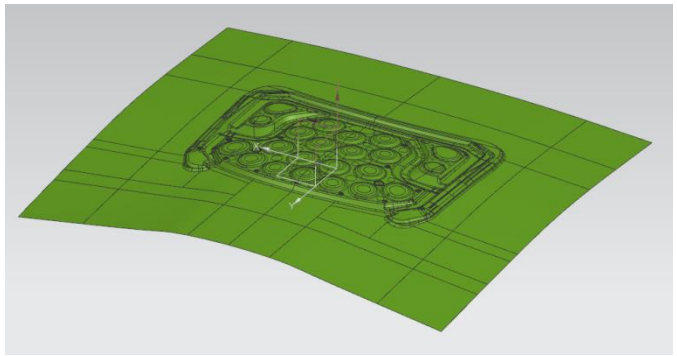

MATRIZ

First of all we will generete the head of the draw punch

We will use the stempellumriss curve provided by the client to extrude it in the Z axis, and we will trim it in the top part with the surface of the stempell.

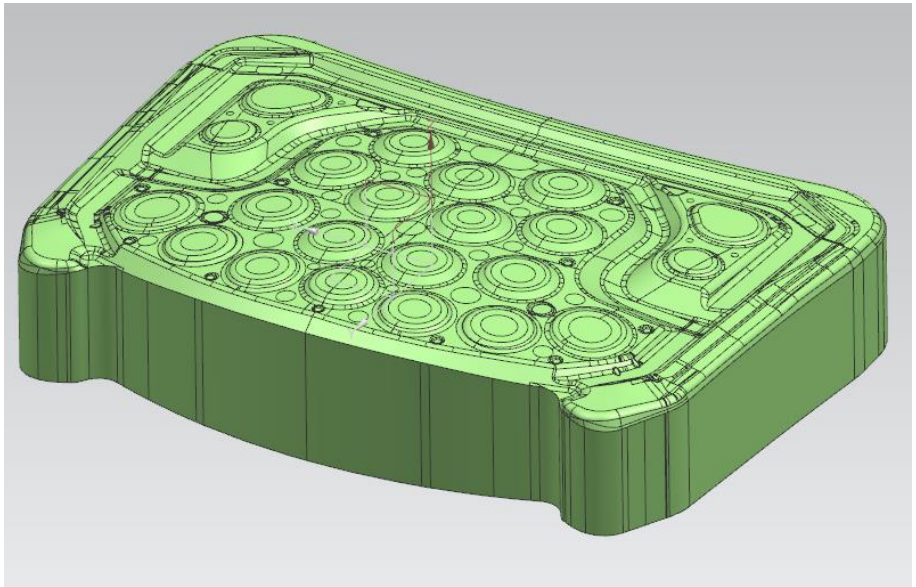

After doing that we will use the matriz surface, and we will make a rougth offset in –Z direction of -50mm, we will do that because all the elements of the die need to have a constant section, and we will trim the body that we have with the surface that we just created.

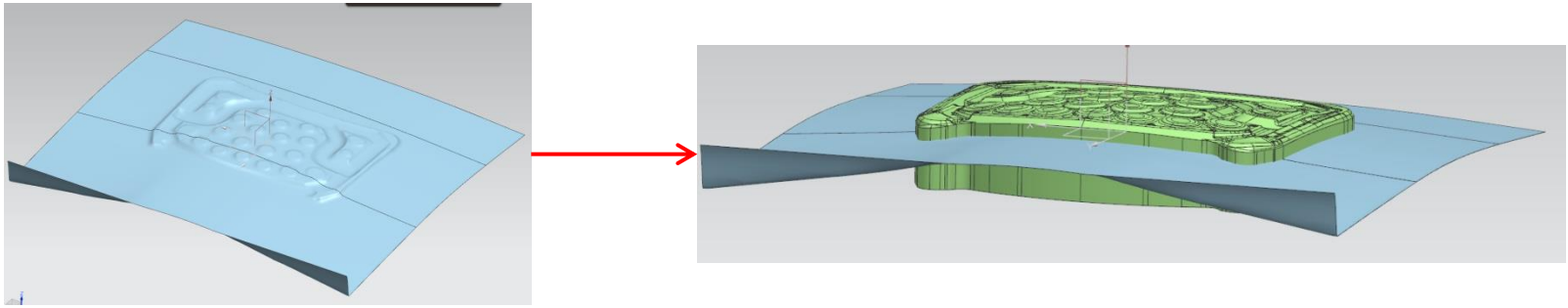

Rougth offset

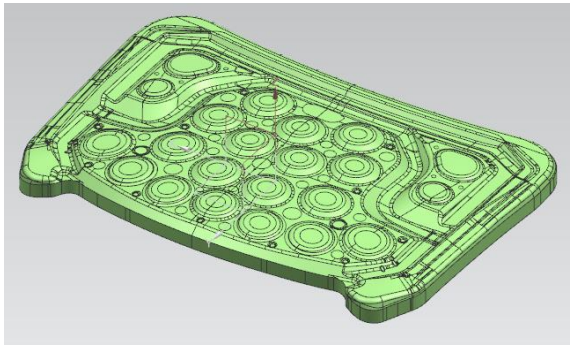

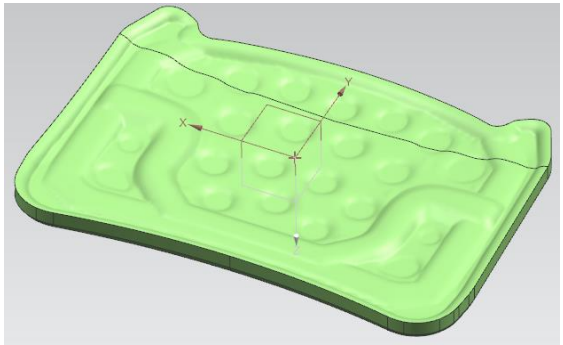

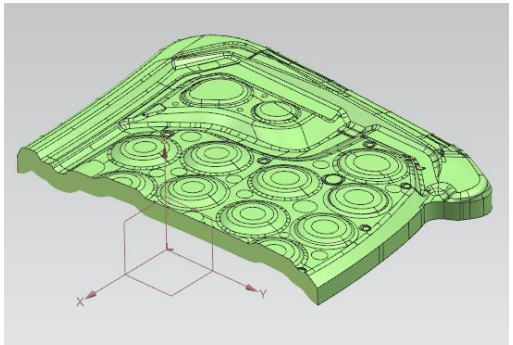

Constant section

The next step will be creating the body of the draw punch, for that we will use the stempellurmiss curve again and will extrude in the Z axis with a thikness of 50 mm like the head of the draw punch, and with an offset of the curve of 20 mm.

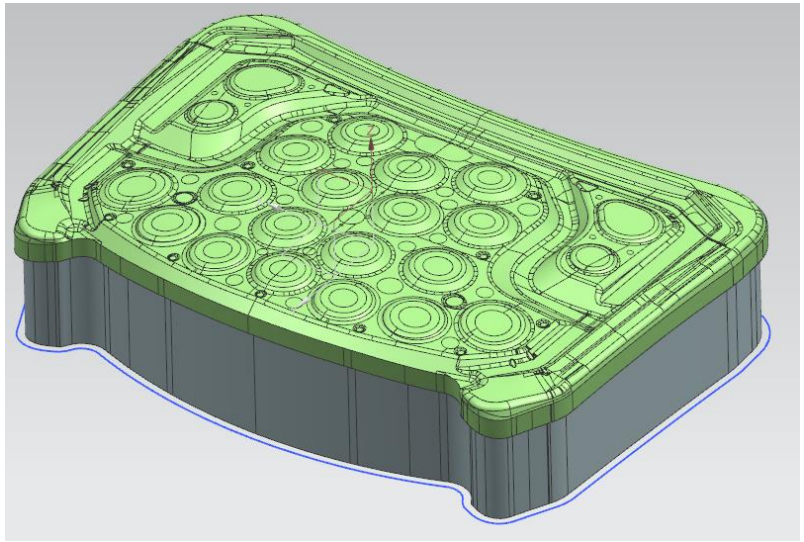

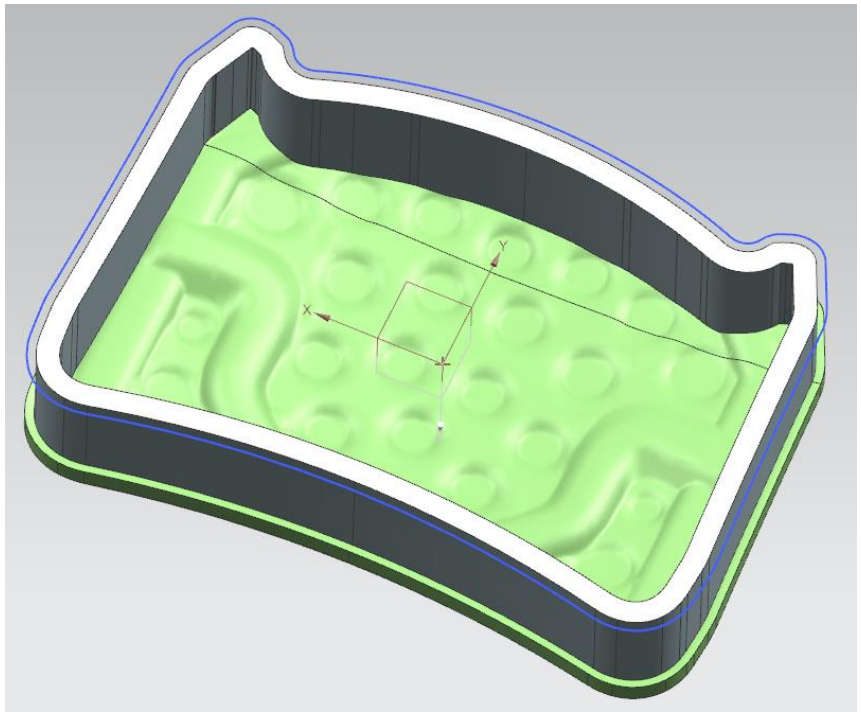

For the last step we will make the ribs inside the body of the draw punch, to do so, you just need to generete a sketch with lines and extrude thoose lines with a thickness, the position of the ribs at the begining of the design, is not clear so you make a guess, as the design develops, you start changing the position of the ribs until you get your final result.

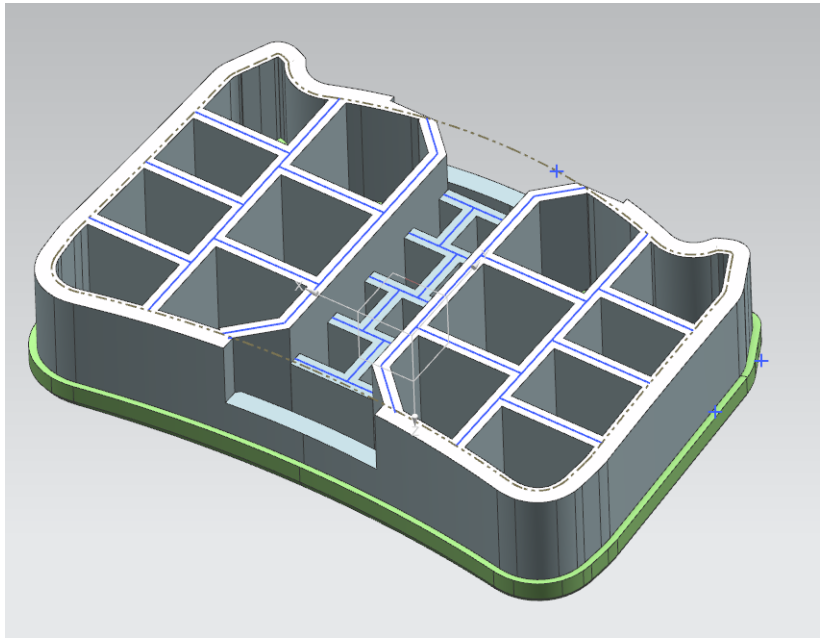

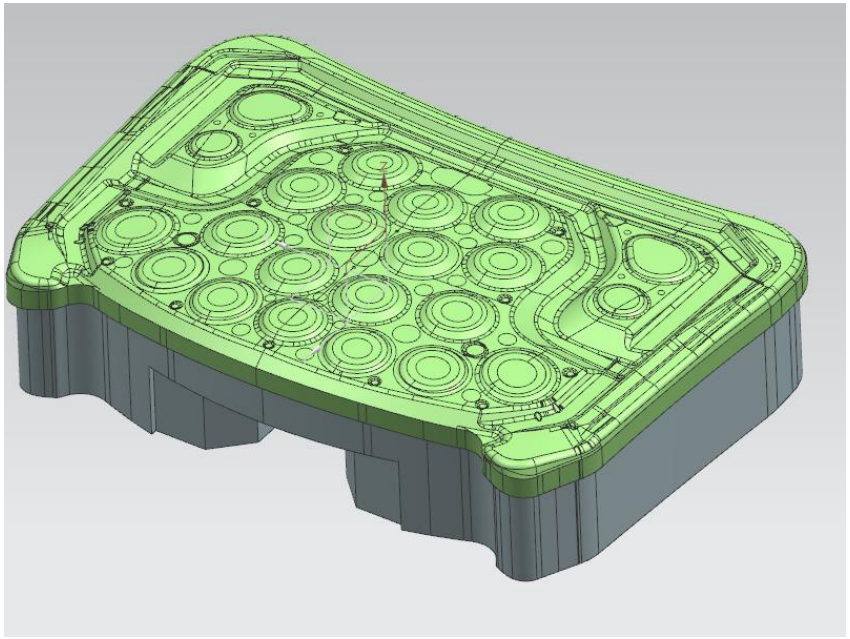

CREATING A STEEL BLADE

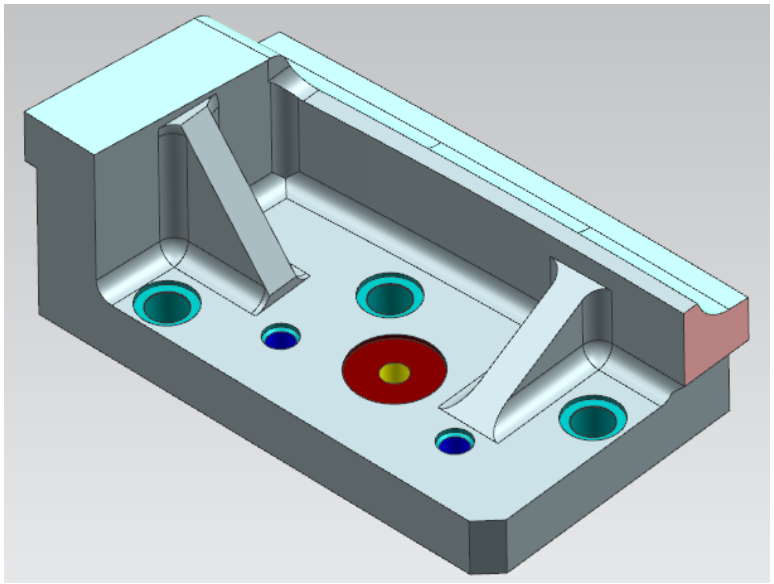

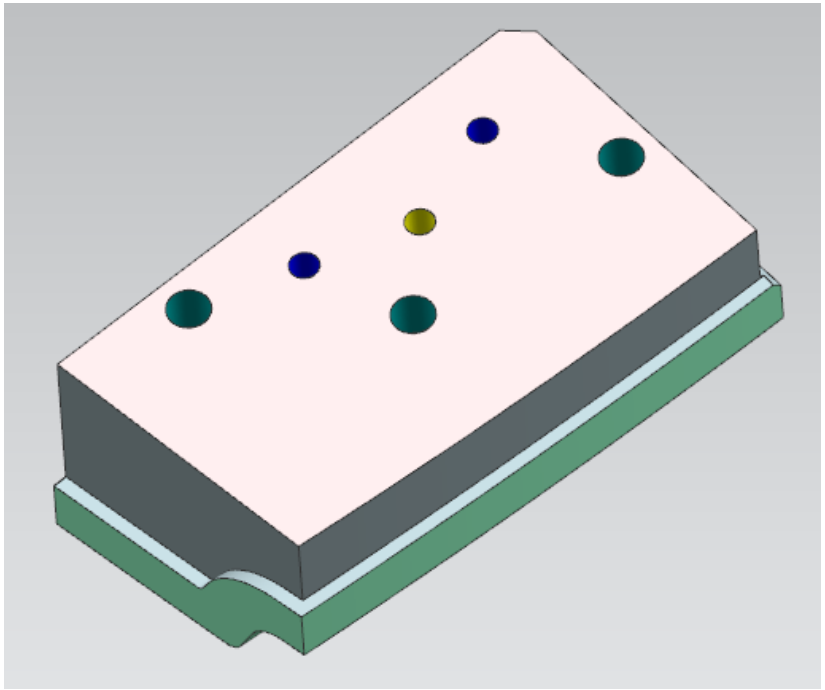

Like in the creation of the draw punch the first thing you need, are the surfaces and the curves that the client is going to give you in the method.

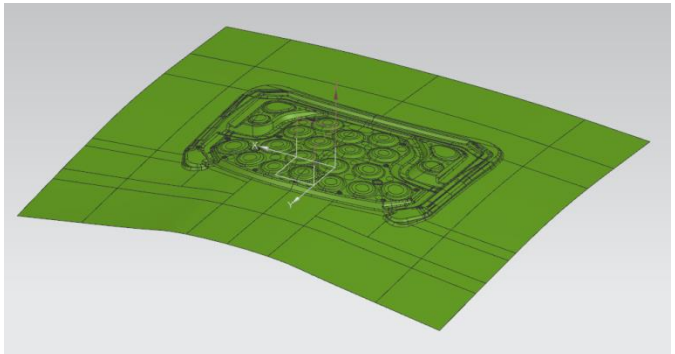

MATRIZ

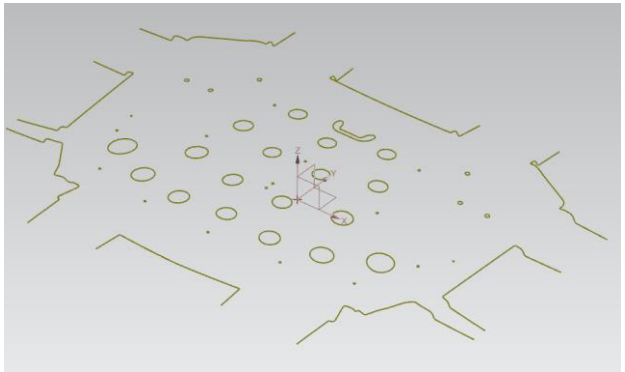

TRIMMING CURVES

First of all we will generete the basic shape of the blade

We will use a square sketch to extrude the basic shape of the blade, and we will trim it in the top part with an offset of 7mm of the surface of the matriz, and also we will trim it with the trimming curve.

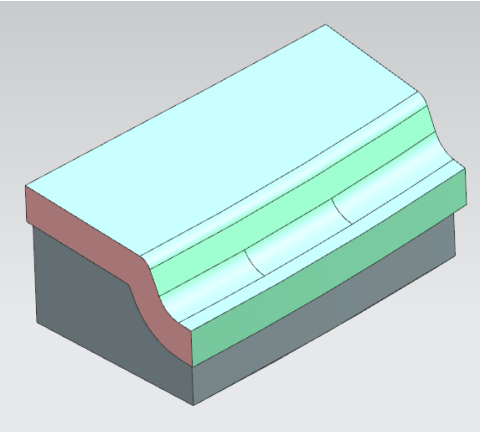

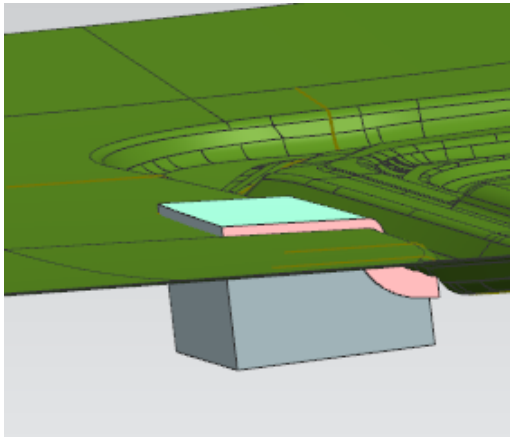

OFFSET OF THE MATRIZ

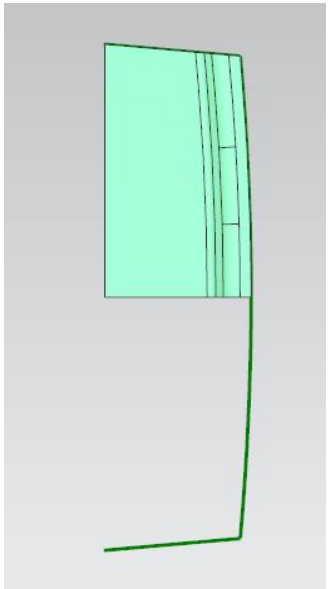

TRIMMING CURVE

After doing the basic form we will generete a pocket to the blade with another sketch, and generate a 3 edge blend to the base.

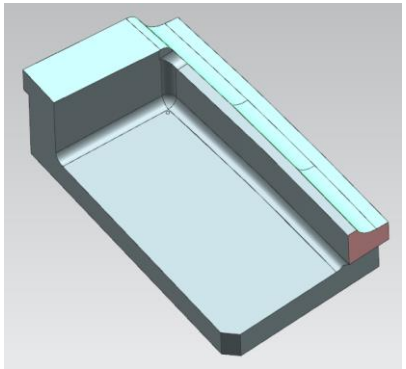

We will add some ribs to the blade to make it more rigid and stable, and also use the command edge blend.

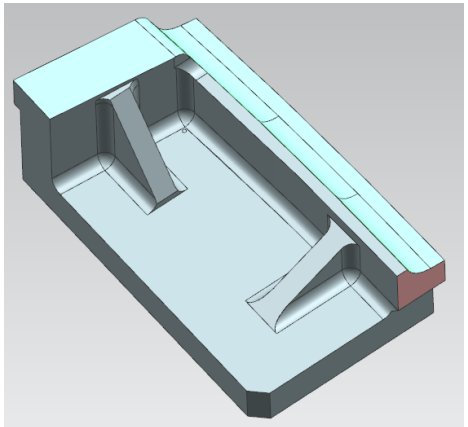

Finally we will make as many holes as we need for the blade.

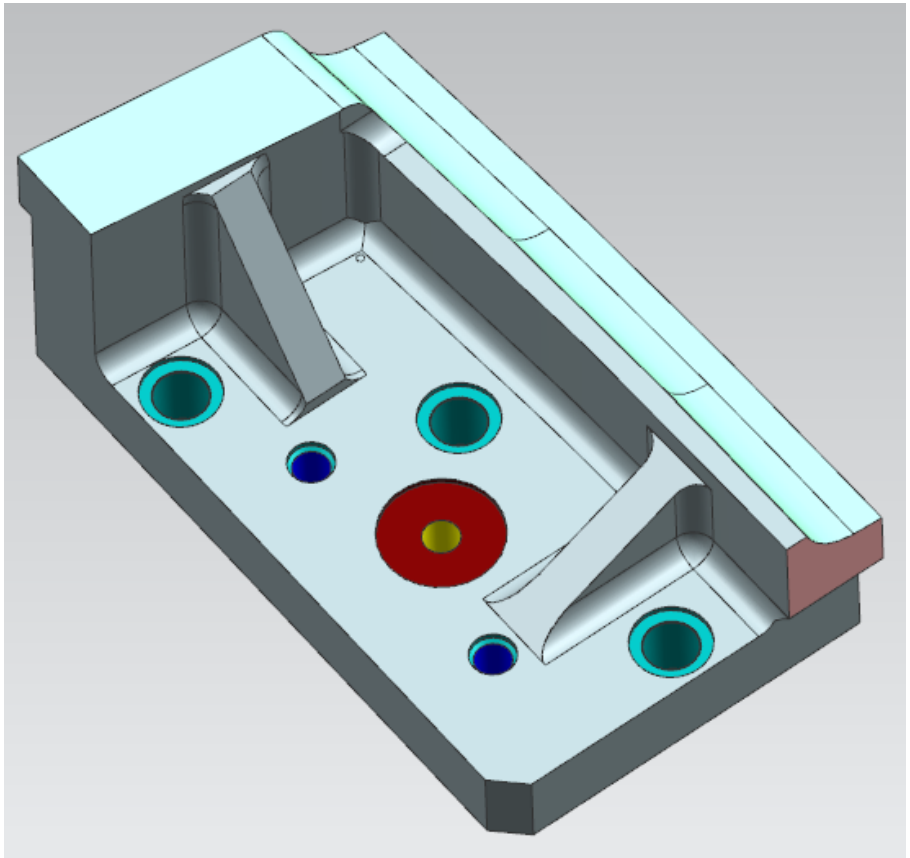

Advanced design with NX 12 (90h)

Practical exercise

UPenAUTO : 2017-1-ES01-KA203-03858

Erasmus+

UPenAUTO: UPSKILLED ENGINEERING PROFILES FOR THE AUTOMOTIVE SECTOR AND UPTAKE OF ALTERNATE SCHEME IN EUROPE´S HIGHER EDUCATION.

Gestamp

GTI
GESTAMP TECHNOLOGY INSTITUTE

FABRIKAZIOAREN ZENTRO AURRERATUA
CENTRO AVANZADO DE FABRICACIÓN

somorrostro
centro de formación / irakas-gunea

UNIVERSITATEA POLITEHNICA

1.- Ejercicio 1

A partir del método plan entregado se pide la realización de un conjunto cortante, siguiendo la estructura de conjunto y pieza mostradas durante el curso.

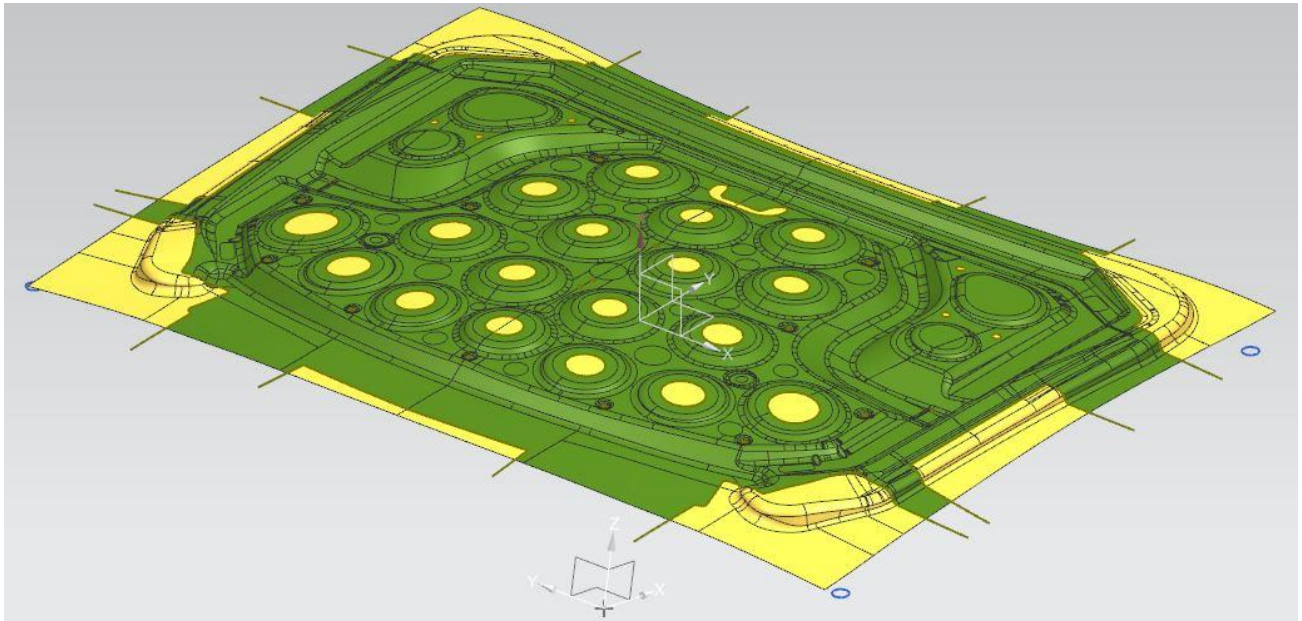

CRITERIOS DE EVALUACION

- **3 CUCHILLAS** – **1,5 puntos** por cuchilla
  - Geometría -0,5 (NO SE VALORARA QUE ESTE EXACTAMENTE IGUAL QUE EL SOLIDO DE REFERENCIA, SIMPRE Y CUANDO SE LE ASEMEJE)
  - Estructura de árbol -0,5
  - Link al body de referencia -0,5
- **3 PUNZONES** – **0,75 puntos** por punzón
  - Geometría -0,25 (NO SE VALORARA QUE ESTE EXACTAMENTE IGUAL QUE EL SOLIDO DE REFERENCIA, SIMPRE Y CUANDO SE LE ASEMEJE)
  - Estructura de árbol -0,25
  - Link al body de referencia -0,25
- **3 CALAS** – **0,25 puntos** por cala
  - Geometría -0,085 (NO SE VALORARA QUE ESTE EXACTAMENTE IGUAL QUE EL SOLIDO DE REFERENCIA, SIMPRE Y CUANDO SE LE ASEMEJE)
  - Estructura de árbol -0,085
  - Link al body de referencia -0,085
- **3 TAPAS**– **0,5 puntos** por tapa
  - Geometría -0,17 (NO SE VALORARA QUE ESTE EXACTAMENTE IGUAL QUE EL SOLIDO DE REFERENCIA, SIMPRE Y CUANDO SE LE ASEMEJE)

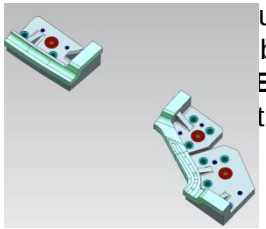

Modelo geometría de las cuchillas

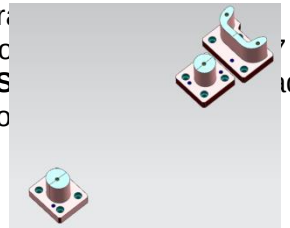

Modelo geometría de los punzones

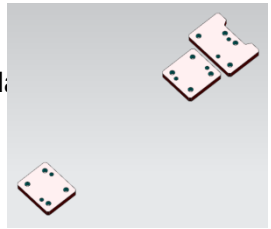

Modelo geometría de las calas

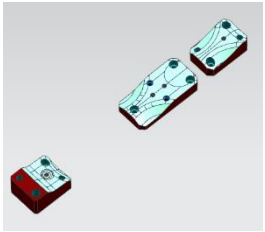

Modelo geometría de las tapas

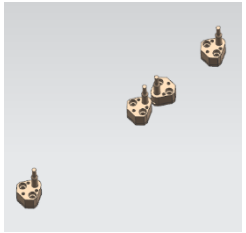

Modelo geometría estandares

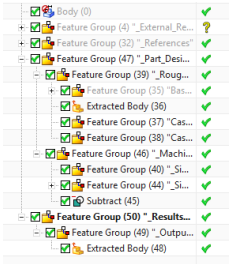

Modelo estructura correcta

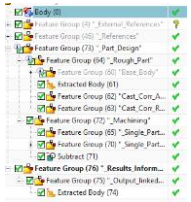

Link al solido de referencia:
- Si seleccionas el solido de referencia y se pone algo de color estaría incorrecto.