Process management
(60 h)

UPenAUTO : 2017-1-ES01-KA203-03858

Erasmus+

UPenAUTO: UPSKILLED ENGINEERING PROFILES FOR THE AUTOMOTIVE SECTOR AND UPTAKE OF ALTERNATE SCHEME IN EUROPE´S HIGHER EDUCATION.

Gestamp

GTI
GESTAMP TECHNOLOGY INSTITUTE

FABRIKAZIOAREN ZENTRO AURRERATUA
CENTRO AVANZADO DE FABRICACIÓN

somorrostro
centro de formación / irakas-gunea

UNIVERSITATEA POLITEHNICA

Table of Contents

- Project Management Processes
- Initiating Process
- Planning Process
- Executing Process
- Monitoring and controlling Process
- Closing Process
- Knowledge Areas
- Project Management Process and Knowledge Area Mapping

Project Management Processes

- **Project management processes** are grouped into five categories known as Project Management Process Groups:
  - ✓ Initiating Process
  - ✓ Planning Process
  - ✓ Executing Process
  - ✓ Monitoring and controlling Process
  - ✓ Closing Process

Project Management Processes

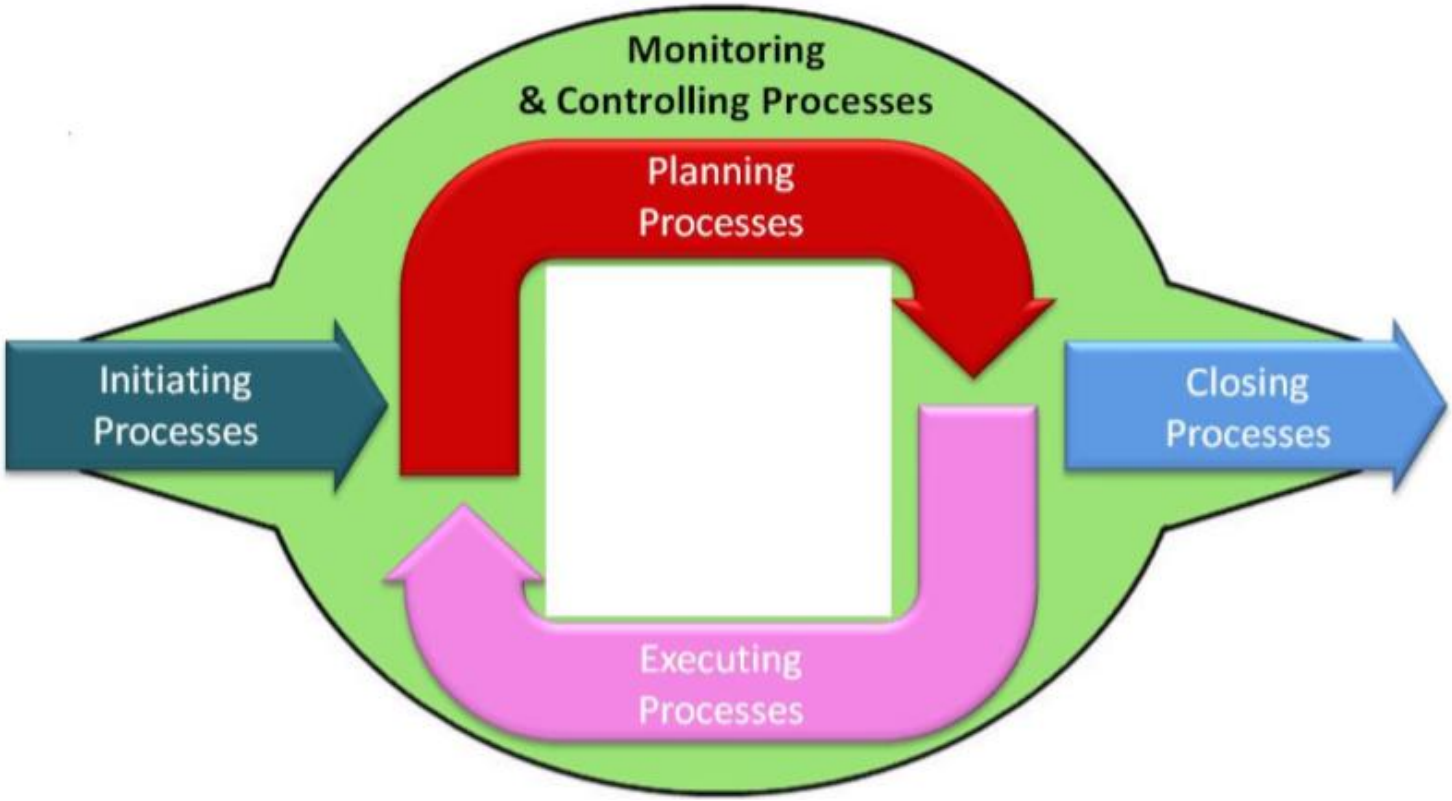

Initiating Process

- The Initiating Process is a process performed to define a new project or a new phase of an existing project by obtaining authorization to start the project or phase.

- initial scope is defied
- initial financial resources
- Internal and external stakeholders

Planning Process

- Planning Process is a process performed to establish the total scope of the effort, define and refine the objectives, and develop the course of action required to attain those objectives.

- The Planning processes develop the project management plan and the project documents that will be used to carry out the project.

Executing Process

- The Executing Process is a process performed to complete the work defined in the project management plan to satisfy the project specifications.

- During project execution, results may require planning updates and rebase lining.

Monitoring and controlling Process

- The Monitoring and Controlling Process is a process required to track, review, and orchestrate the progress and performance of the project.

Closing Process

- The Closing Process is a process performed to conclude all activities across all Project Management Process to formally complete the project, phase, or contractual obligations.

Knowledge Areas

- A Knowledge Area represents a complete set of concepts, terms, and activities that make up a professional field, project management field, or area of specialization.

- The **47** project management processes identified in the PMBOK Guide are further grouped into ten separate Knowledge Areas.

Knowledge Areas

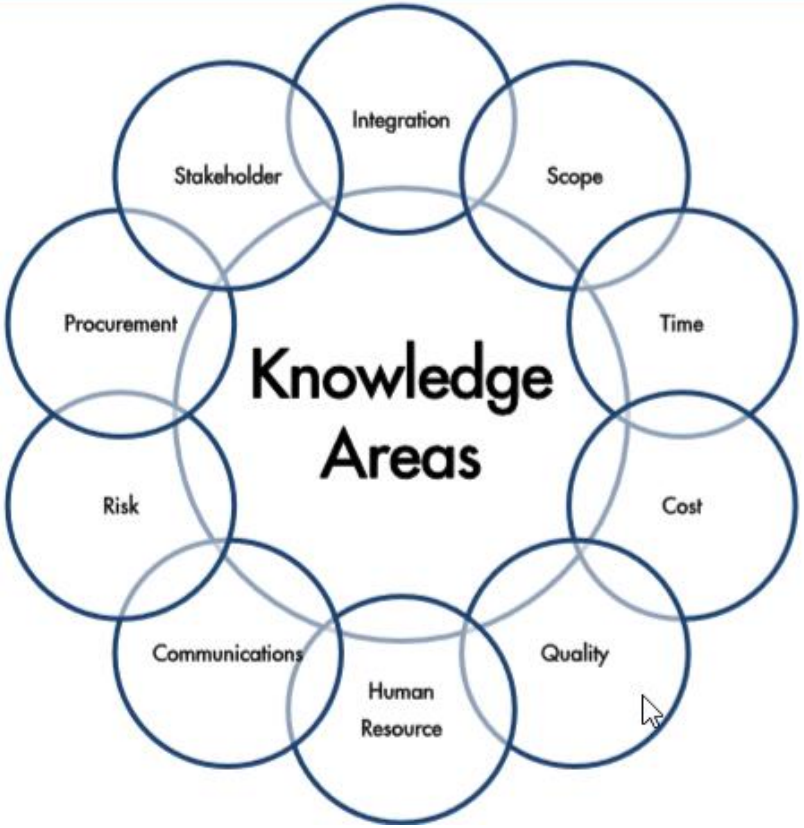

Knowledge Areas

- The Knowledge Areas are:

1) Project Integration Management
2) Project Scope Management
3) Project Time Management
4) Project Cost Management
5) Project Quality Management
6) Project Human Resource Management
7) Project Communications Management
8) Project Risk Management
9) Project Procurement Management
10) Project Stakeholder Management

Project Management Process and Knowledge Area Mapping

Knowledge Areas	Project Management Process				
	Initiating	Planning	Executing	Monitoring & Control	Closing
4. Integration	4.1 Develop Project Charter	4.2 Develop Project Management Plan	4.3 Direct and Manage Project Work	4.4 Monitor and Control Project Work 4.5 Perform Integrated Change Control	4.6 Close Project or Phase

Project Management Process and Knowledge Area Mapping

Knowledge Areas	Project Management Process				
	Initiating	Planning	Executing	Monitoring & Control	Closing
5. Scope		5.1 Plan Scope Management 5.2 Collect Requirements 5.3 Define Scope 5.4 Create WBS		5.5 Validate Scope 5.6 Control Scope	

Project Management Process and Knowledge Area Mapping

Knowledge Areas	Project Management Process				
	Initiating	Planning	Executing	Monitoring & Control	Closing
5. Scope		5.1 Plan Scope Management 5.2 Collect Requirements 5.3 Define Scope 5.4 Create WBS		5.5 Validate Scope 5.6 Control Scope	

Project Management Process and Knowledge Area Mapping

Knowledge Areas	Project Management Process				
	Initiating	Planning	Executing	Monitoring & Control	Closing
6. Time		6.1 Plan Schedule Management 6.2 Define Activities 6.3 Sequence Activities 6.4 Estimate Activity Resources 6.5 Estimate Activity Durations 6.6 Develop Schedule		6.7 Control Schedule	

Project Management Process and Knowledge Area Mapping

Knowledge Areas	Project Management Process				
	Initiating	Planning	Executing	Monitoring & Control	Closing
7. Cost		7.1 Plan Cost Management 7.2 Estimate Costs 7.3 Determine Budget		7.4 Control Costs	

Project Management Process and Knowledge Area Mapping

Knowledge Areas	Project Management Process				
	Initiating	Planning	Executing	Monitoring & Control	Closing
8. Quality		8.1 Plan Quality Management	8.2 Perform Quality Assurance	8.3 Control Quality	

Project Management Process and Knowledge Area Mapping

Knowledge Areas	Project Management Process				
	Initiating	Planning	Executing	Monitoring & Control	Closing
9. Human Resource		9.1 Plan Human Resource Management	9.2 Acquire Project Team 9.3 Develop Project Team 9.4 Manage Project Team		

Project Management Process and Knowledge Area Mapping

Knowledge Areas	Project Management Process				
	Initiating	Planning	Executing	Monitoring & Control	Closing
10. Communications		10.1 Plan Communications Management	10.2 Manage Communications	10.3 Control Communications	

Project Management Process and Knowledge Area Mapping

Knowledge Areas	Project Management Process				
	Initiating	Planning	Executing	Monitoring & Control	Closing
11. Risk		11.1 Plan Risk Management 11.2 Identify Risks 11.3 Perform Qualitative Risk Analysis 11.4 Perform Quantitative Risk Analysis 11.5 Plan Risk Responses		11.6 Control Risks	

Project Management Process and Knowledge Area Mapping

Knowledge Areas	Project Management Process				
	Initiating	Planning	Executing	Monitoring & Control	Closing
12. Risk		12.1 Plan Procurement Management	12.2 Conduct Procurements	12.3 Control Procurements	12.4 Close Procurements

Project Management Process and Knowledge Area Mapping

Knowledge Areas	Project Management Process				
	Initiating	Planning	Executing	Monitoring & Control	Closing
13. Stakeholder	13.1 Identify Stakeholders	13.2 Plan Stakeholder Management	13.3 Manage Stakeholder Engagement	13.4 Control Stakeholder Engagement	

Initiating Process

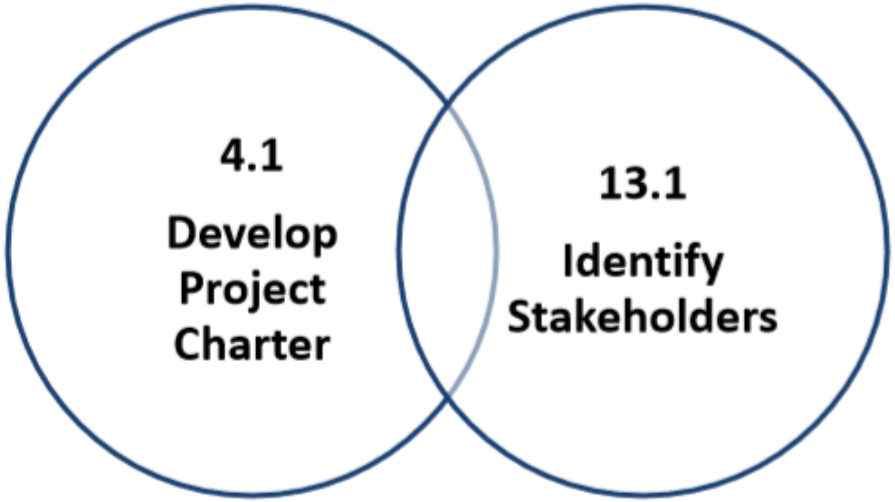

Process management

Planning Process

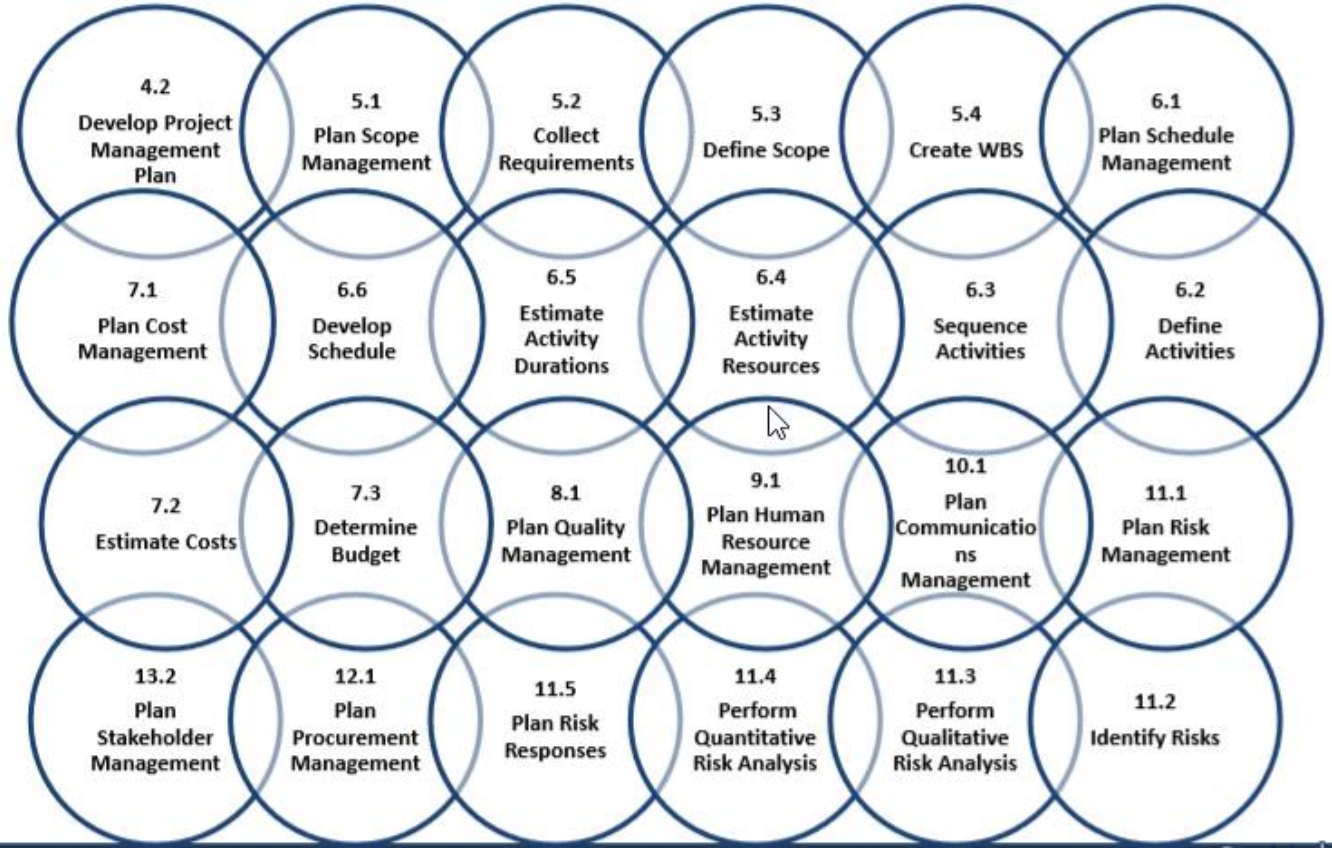

Executing Process

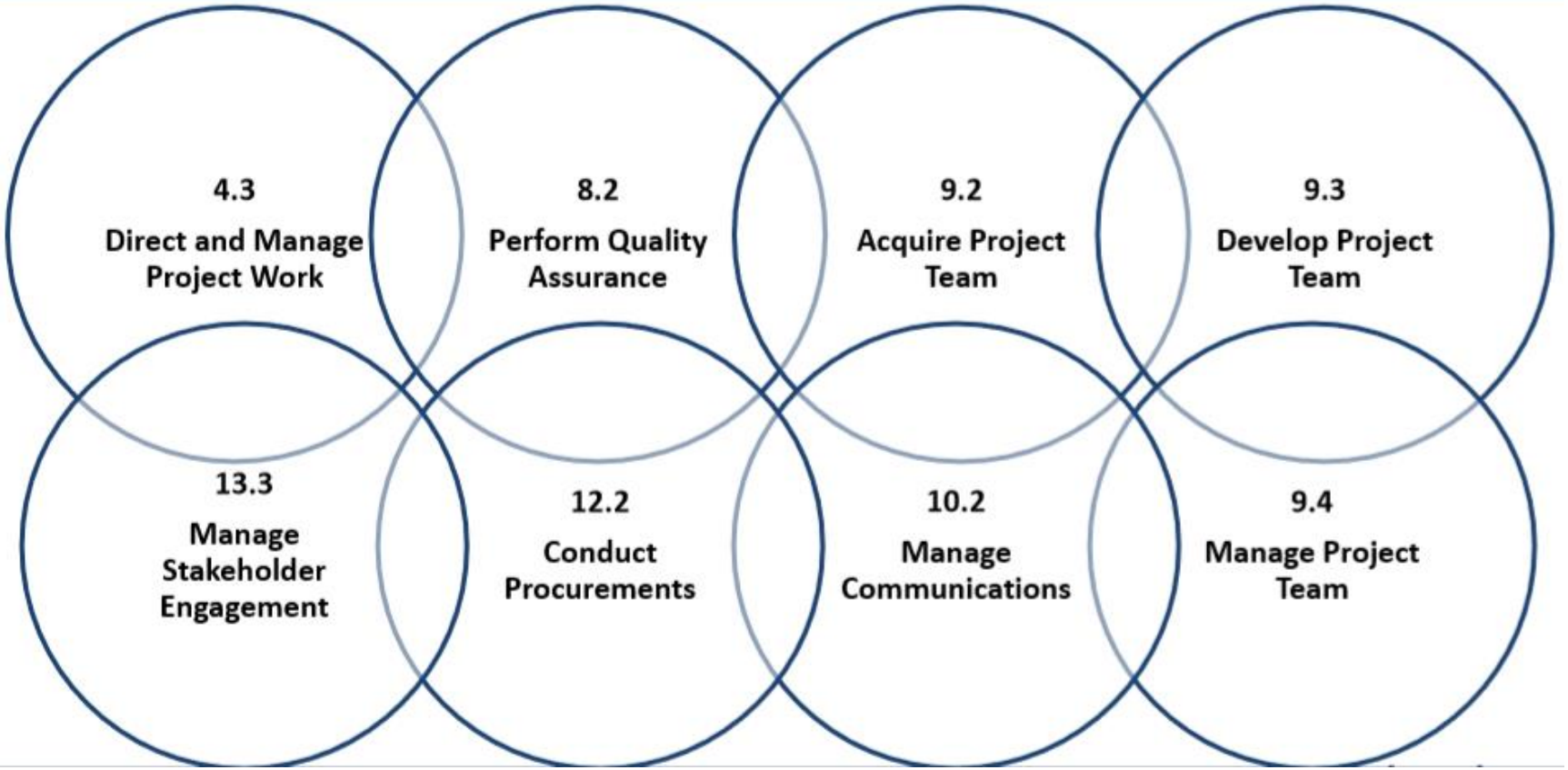

Monitoring and Controlling

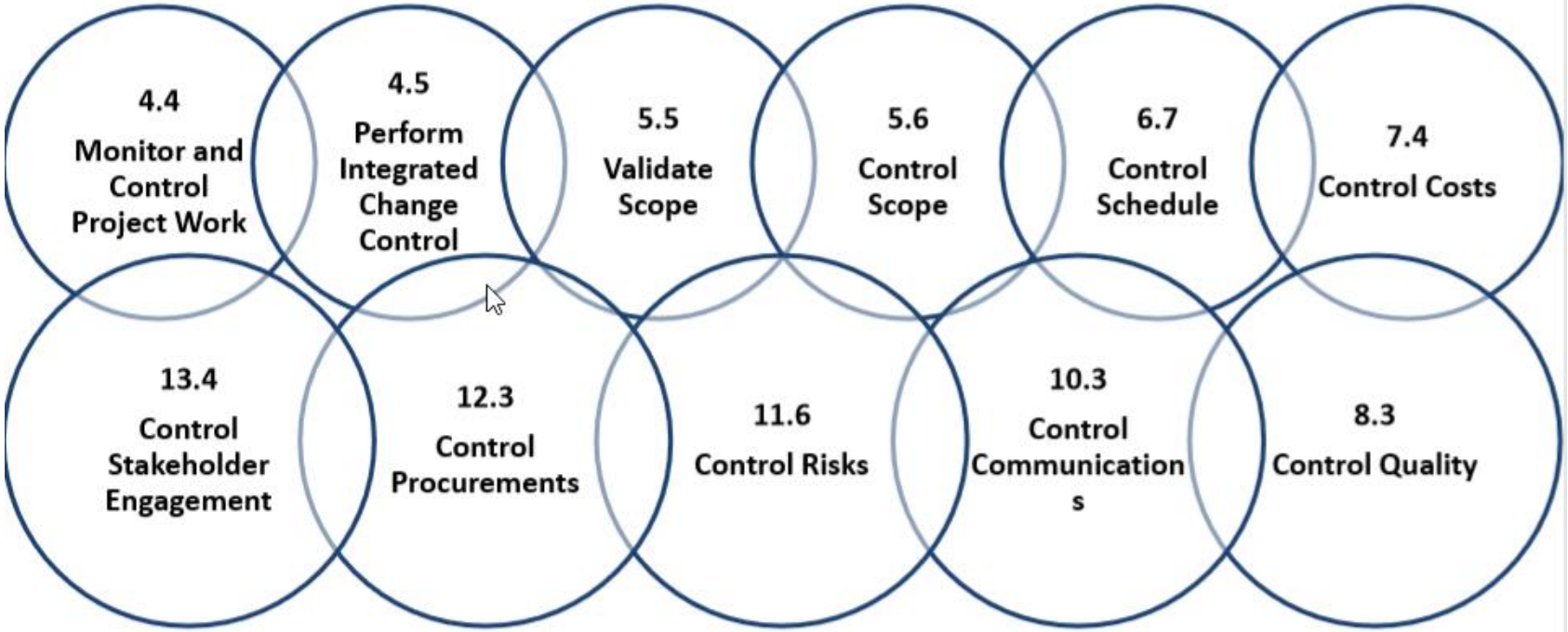

Closing Process

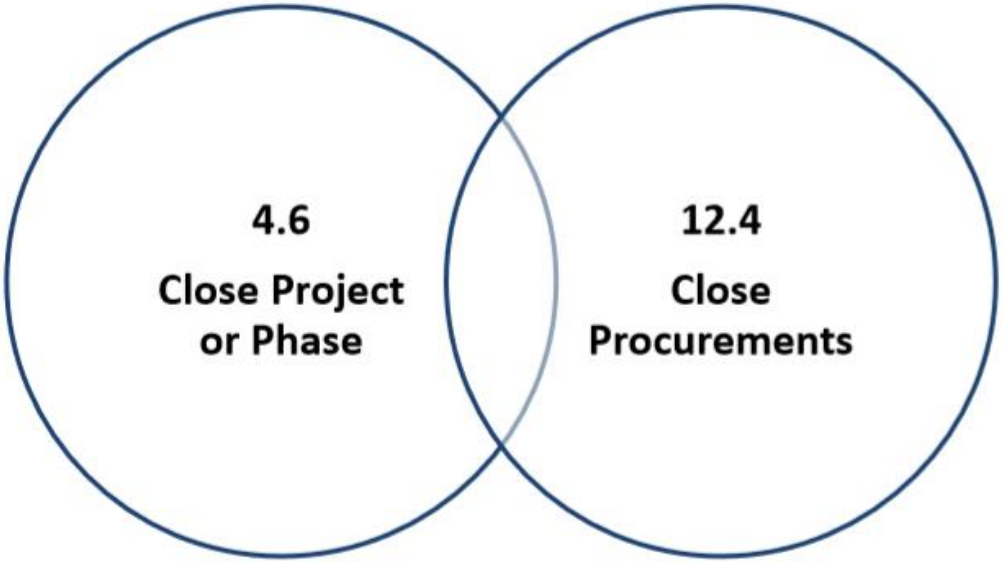

Process Management (60 h)

Practical exercise

UPenAUTO : 2017-1-ES01-KA203-03858

Erasmus+

UPenAUTO: UPSKILLED ENGINEERING PROFILES FOR THE AUTOMOTIVE SECTOR AND UPTAKE OF ALTERNATE SCHEME IN EUROPE´S HIGHER EDUCATION.

Gestamp

GTI
GESTAMP TECHNOLOGY INSTITUTE

FABRIKAZIOAREN ZENTRO AURRERATUA
CENTRO AVANZADO DE FABRICACIÓN

somorrostro
centro de formación / irakas-gunea

UNIVERSITATEA POLITEHNICA

Debe realizarse, el Método Plan y la simulación completa, de la pieza entregada en formato IGS.
Posteriormente se procederá a realizar el diseño, por ejemplo, de una parte de un troquel cortante, cuchillas, etc.
Se deberá realizar una presentación mediante un PowerPoint.

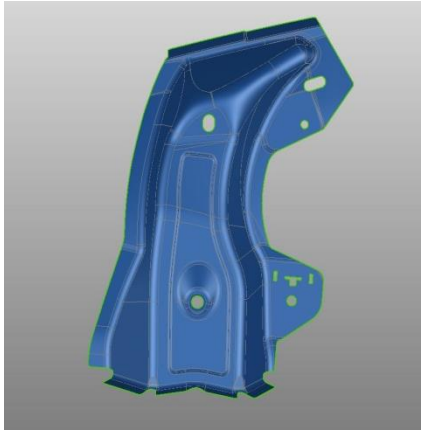

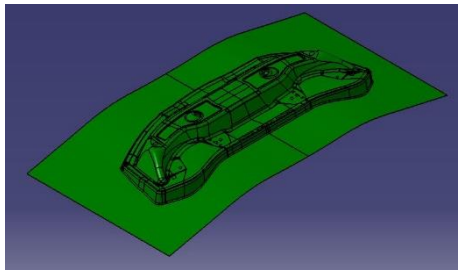

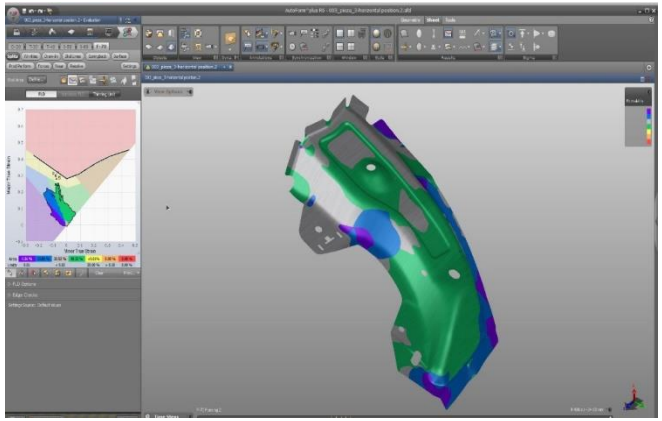

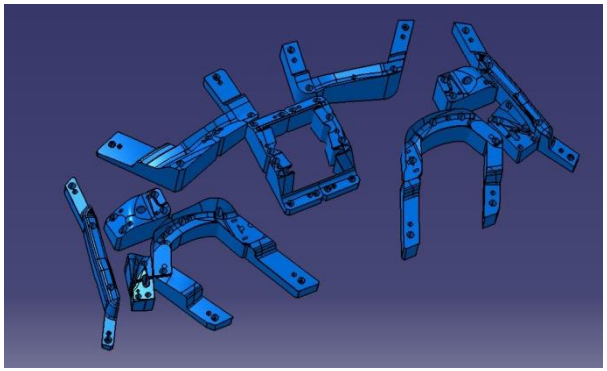

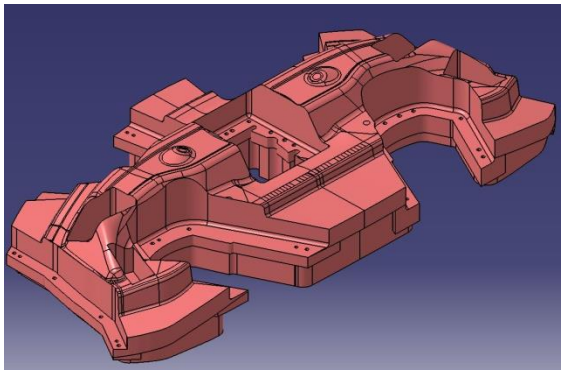

CRITERIOS DE EVALUACION

- Correct result of plane method: 3 points
- Correct simulation result: 2 points
- Full specification tree structure: 2 points
- Group work correctly presented: 1 point.
- Clear and well-explained concepts: 1 point
- Well done presentation : 1 point

To pass the exam you must obtain a minimum of 5 points.