Strength of materials (30 h)

UPenAUTO : 2017-1-ES01-KA203-03858

Erasmus+

UPenAUTO: UPSKILLED ENGINEERING PROFILES FOR THE AUTOMOTIVE SECTOR AND UPTAKE OF ALTERNATE SCHEME IN EUROPE´S HIGHER EDUCATION.

Gestamp

GTI
GESTAMP TECHNOLOGY INSTITUTE

FABRIKAZIOAREN ZENTRO AURRERATUA
CENTRO AVANZADO DE FABRICACIÓN

somorrostro
centro de formación / irakas-gunea

UNIVERSITATEA POLITEHNICA

Content

1. Strength of materials theory

General definitions
Generalized hooke´s law
Stress tensor
Mohr´s circle
Variables obtained using stress tensor
Material failure criteria

2. Finite element method
[K]{d}={F}
Stiffness matrix
Interpolation
Boundary conditions
Results visualization

3. Analysis types
Linear calculations
Non-linear calculations
Buckling calculations
Dynamic calculations

4. FEM software
Simulation process
Element types

5. Correlation
Test results vs simulation
Optimization

6. Exercises

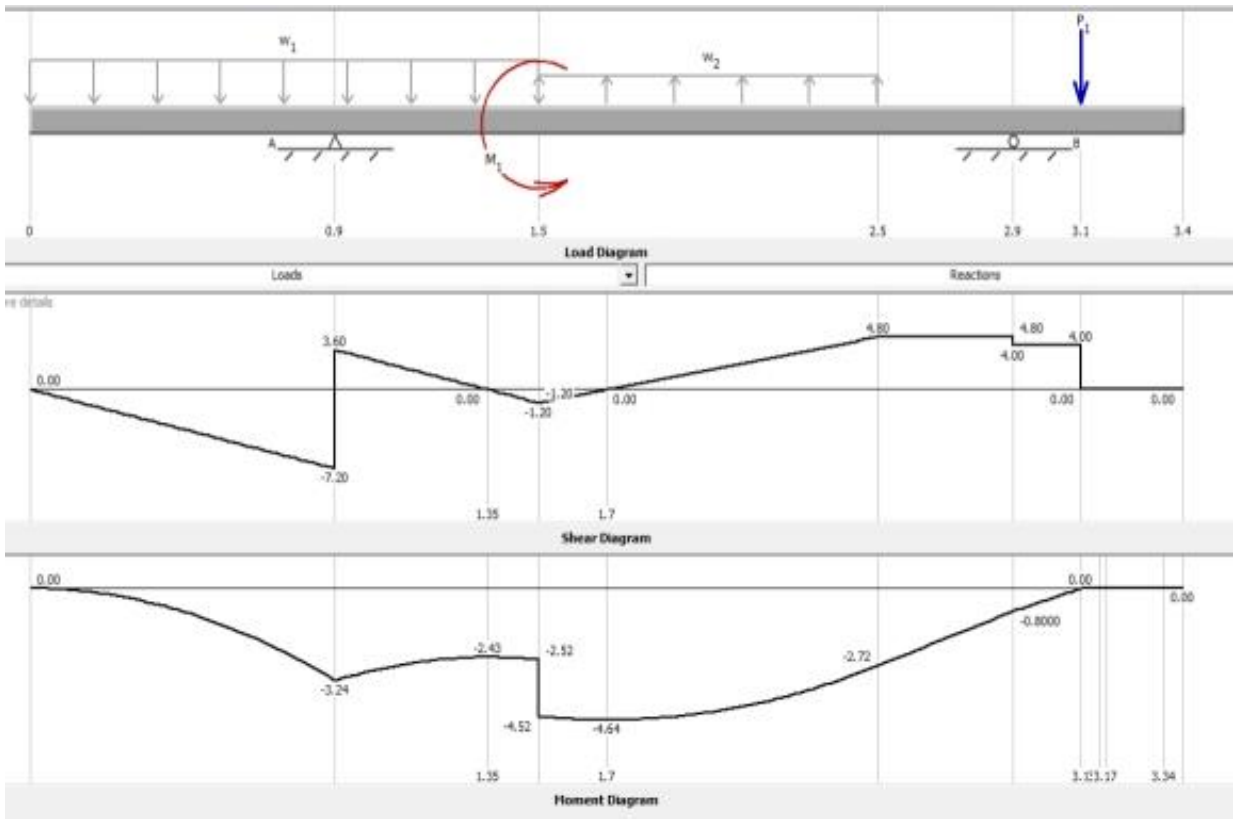

Source: [1]

1. Strength of materials theory

- General definitions
- Generalized Hooke's law
- Stress tensor
- Mohr´s circle
- Variables obtained using stress tensor
- Material failure criteria

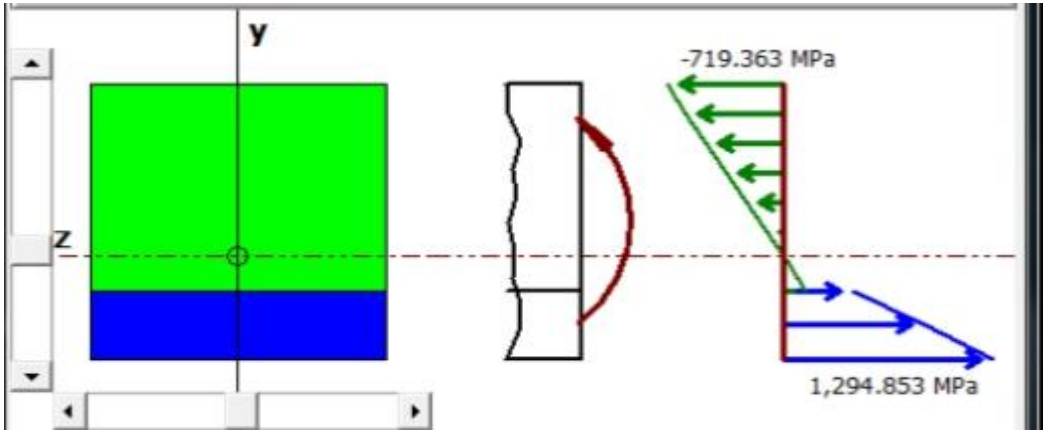

Source: [1]

General definitions

The strength of a material is its ability to withstand an applied load without failure or plastic deformation [2].

Stiffness is an indicator of the tendency for an element to return to its original form after being subjected to a force.

Strength measures how much stress can be applied to an element before it deforms permanently or fractures.

Hardness measures a material's resistance to surface deformation.

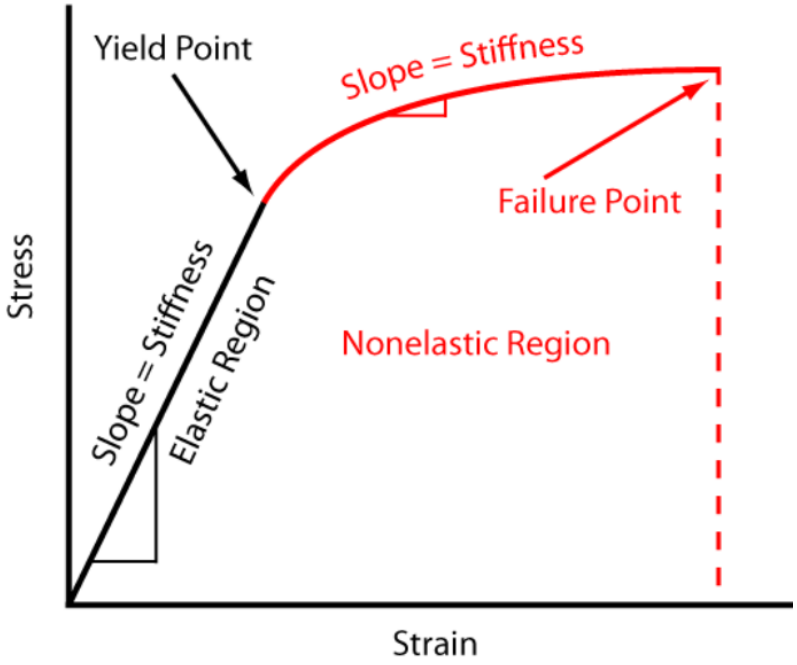

The relationship between stiffness and yield strength [3]

General definitions [3]

- **Stress** is an internal force resulting from an applied load; it acts on the cross-section of a mechanical or structural component.
- **Strain** is the change in shape or size of a body that occurs whenever a force is applied.
- **Yield strength** is used in materials that exhibit an elastic behavior. It's the maximum tensile stress the material can handle before permanent deformation occurs.
- **Ultimate strength** refers to the maximum stress before failure occurs.
- **Fracture strength** is the value corresponding to the stress at which total failure occurs.

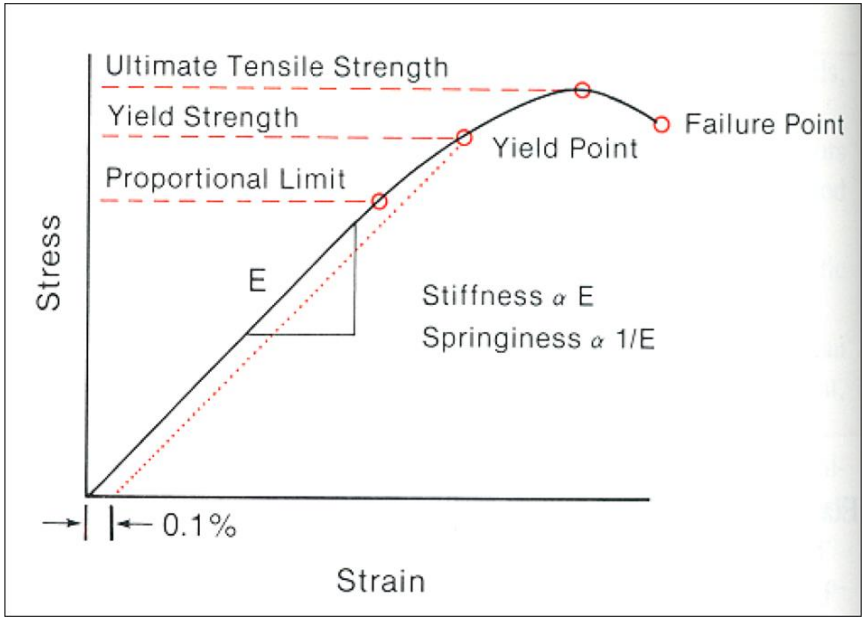

Types of loading [4]

Loading Type	Stress Type	Illustration
Axial Force	• Axial Stress (general case) • Tensile Stress (if force is tensile) • Compressive Stress (if force is compressive)	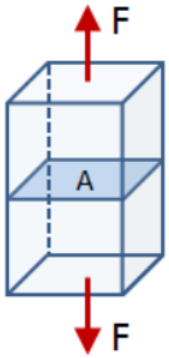
Shear Force	Transverse Shear Stress	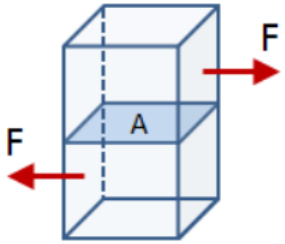
Bending Moment	Bending Stress	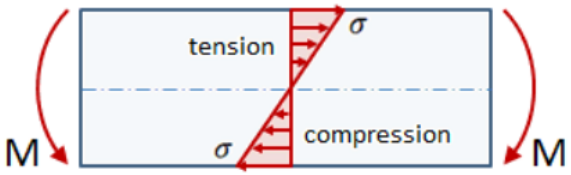
Torsion	Torsional Stress	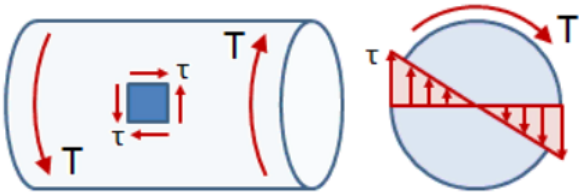

Stress terms

Compressive stress is the stress state caused by an applied load that acts to reduce the length of the material along the axis of the applied load[3].

Tensile stress is the stress state caused by an applied load that tends to elongate the material along the axis of the applied load, in other words the stress caused by pulling the material [3].

Shear stress is the stress state caused by the combined energy of a pair of opposing forces ac ting along parallel lines of action through the material, in other words the stress caused by faces of the material sliding relative to one another [3].

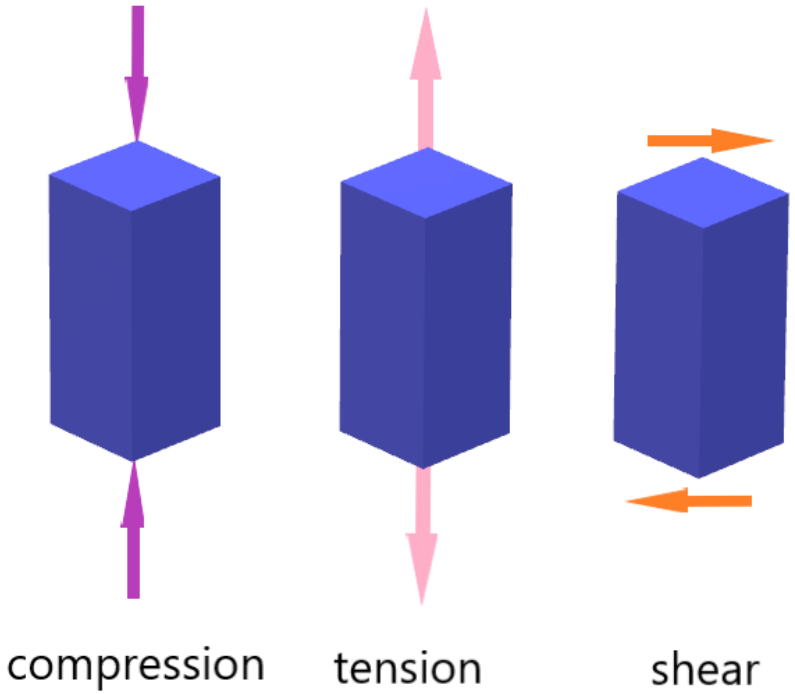

Types of Stresses

Two basic stresses exists :

- normal stress - the direction of the force is normal to the area resisting the force
- shear stress - the direction of the force is parallel to the area resisting the force.

Normal Stress	
Axial Stress:	$\sigma = \frac{F}{A}$
Bending Stress:	$\sigma_b = \frac{My}{I_c}$

Shear Stress	
Transverse Stress:	$\tau = \frac{F}{A}$
Torsional Stress:	$\tau = \frac{Tr}{J}$

Where: F is the force , A - area, M - bending moment, y - distance between the centroidal axis and the outer surface, Ic - centroidal moment of inertia of the cross section about the appropriate axis, T - torsion, r -radius, and J - polar moment of inertia of the cross section.

Strain

Strain is the ratio of the deformation to the original length of the part:

$$\varepsilon = \frac{\delta \ell}{\ell_0}$$

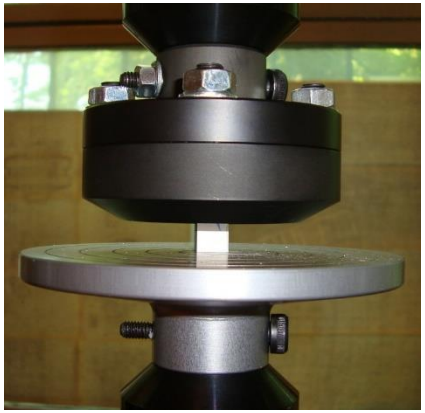

where ε is strain in measured direction, lo is the original length of the material and l is he current length of the material.

Units are: m/m, mm/m, In/in, in/ft

Strain parameters

Deformations are a direct indicator of strain.

Deformation of the material is the change in geometry created when stress is applied.

- *Elastic deformation* - the stress is a linear function of strain. The elastic deformation exists only while the tension is applied and disappears immediately after the stress is removed.
- *Plastic deformation*- beyond the linear region, stress and strain show nonlinear behaviour.

Description		Result
Width x Thickness	WxT	10.05 x 4.16 mm
Startsection	S_0	41.81 mm²
E-Modulus	E	4.00 GPa
Load max	Fm	6.11 kN
Deformation at Fmax	Agt	0.27 %
Elongation	A	4.80 %
Tensile strength	R_m	146.23 MPa

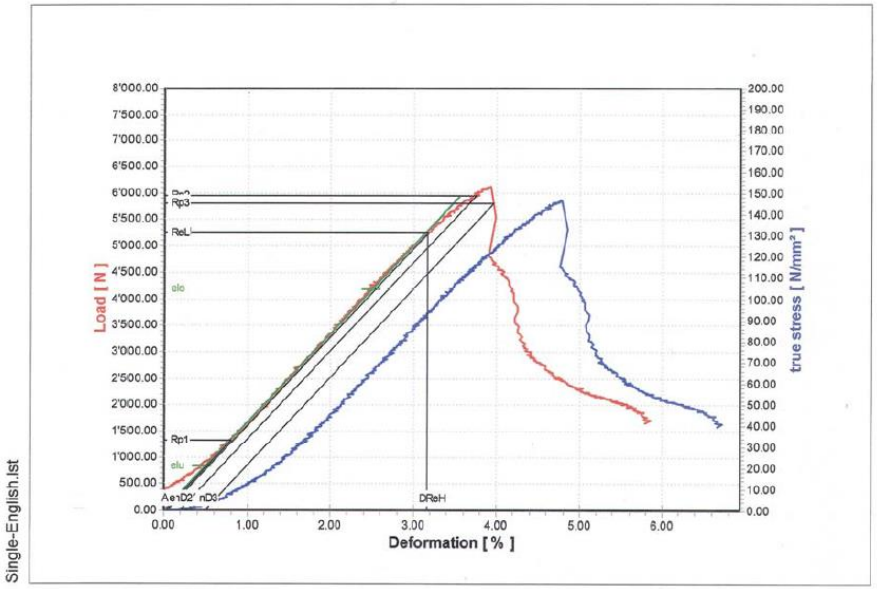

Source: [4]

Modulus of Elasticity (E)

The constant that expresses the ratio of unit stress to unit deformation for all values unit stress not exceeding the proportional limit of material.

It is also known as Young's modulus or elastic modulus.

Every material has a unique elastic modulus value. A typical value for steel is 29 x 10^6 psi (200 GPa)

Hooke's law

It was discovered by the English scientist Robert Hooke in 1660. Hooke's law, F = kx, where the applied force F equals a constant k times the displacement or change in length x.

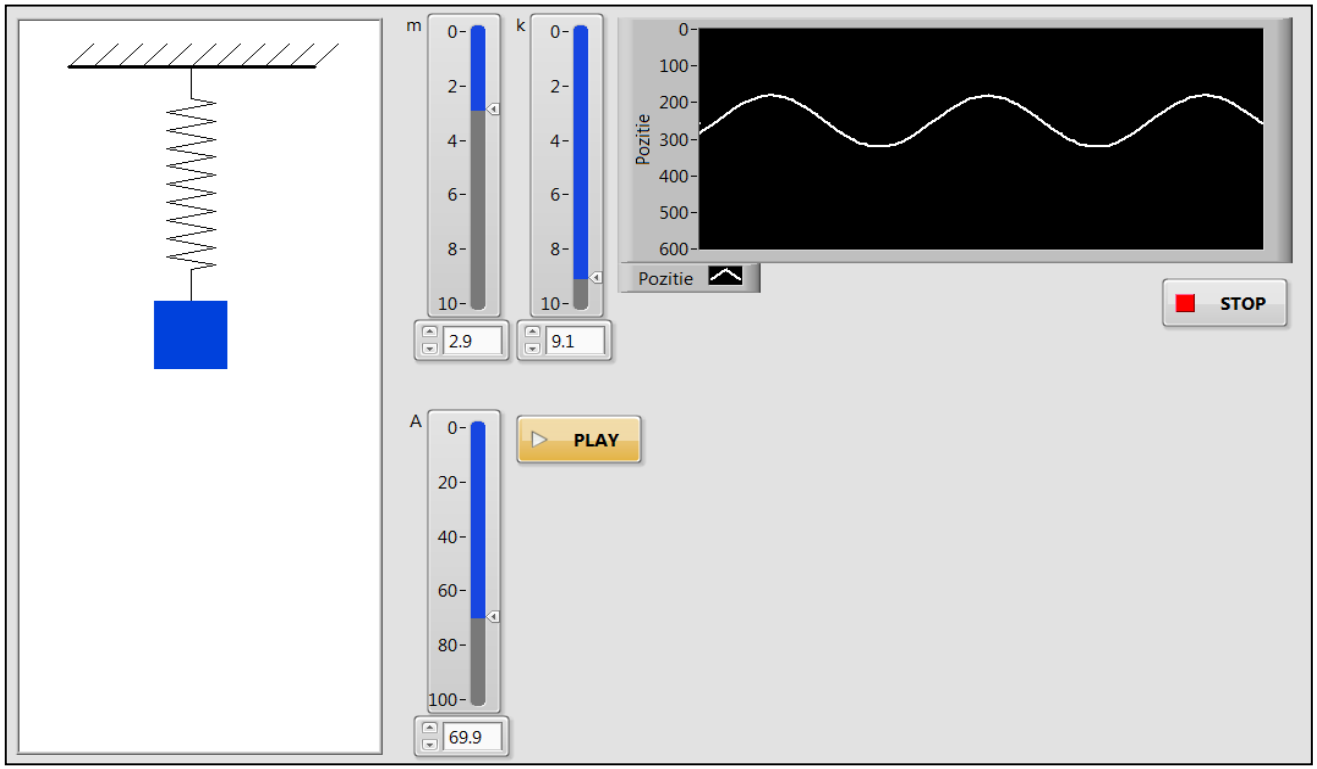

Generalized Hooke's law

The displacement or size of the deformation is directly proportional to the deforming force or load.

When the force applied is proportional to the deflection, a material is said to comply with Hooke's law. There is a linear relationship between force and displacement and thus linear elastic materials comply with this law.

It states that for materials loaded within elastic limits, the effort is proportional to the strain.

$$\varepsilon_x = \frac{1}{E}\left[\sigma_x - v\left(\sigma_y + \sigma_z\right)\right]$$

$$\varepsilon_y = \frac{1}{E}\left[\sigma_y - v\left(\sigma_x + \sigma_z\right)\right]$$

$$\varepsilon_z = \frac{1}{E}\left[\sigma_z - v\left(\sigma_x + \sigma_y\right)\right]$$

Where,

- σ is the stress
- E is the modulus of elasticity
- ε is the strain

Hooke's Law Graph

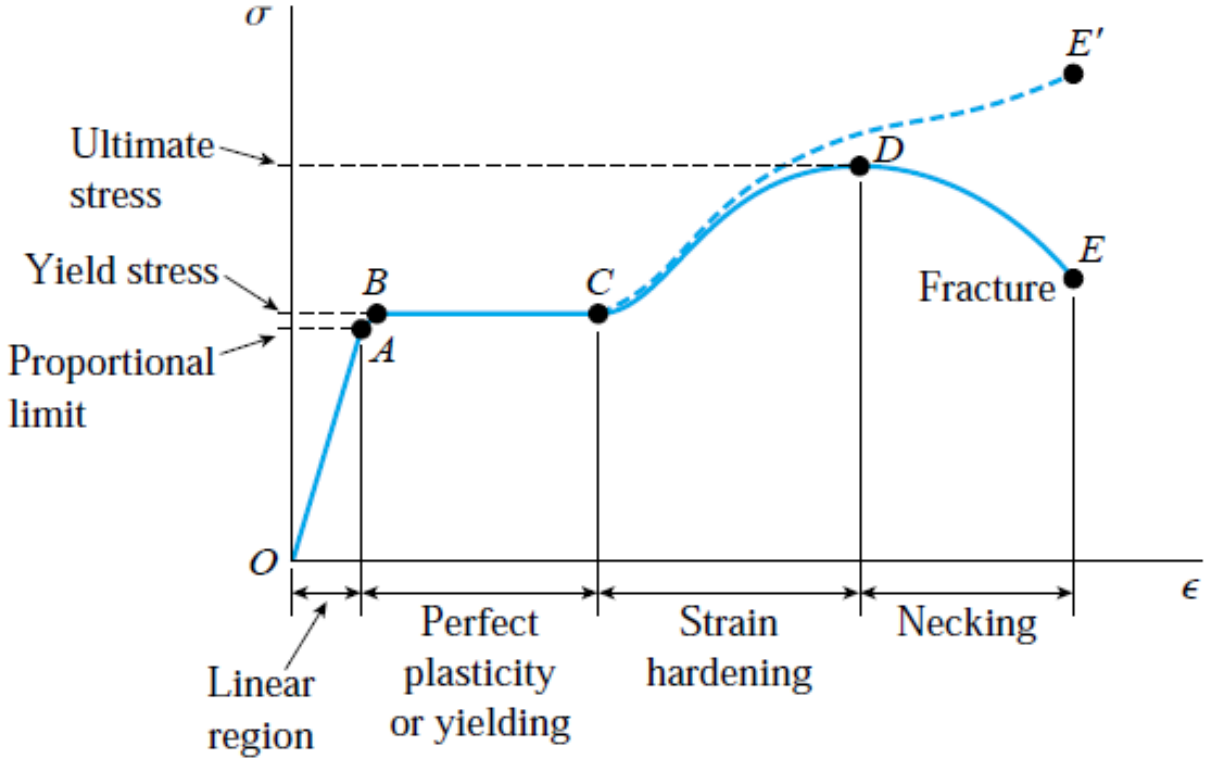

Stress-strain diagram for a typical structural steel in tension (not to scale)

Source: https://www.quora.com/What-is-Hookes-law

Stress Tensor

The stresses acting on an internal plane are decomposed into three orthogonal components:

- *normal stress* – one component normal to the surface
- *shear stresses* - two components tangential to the surface

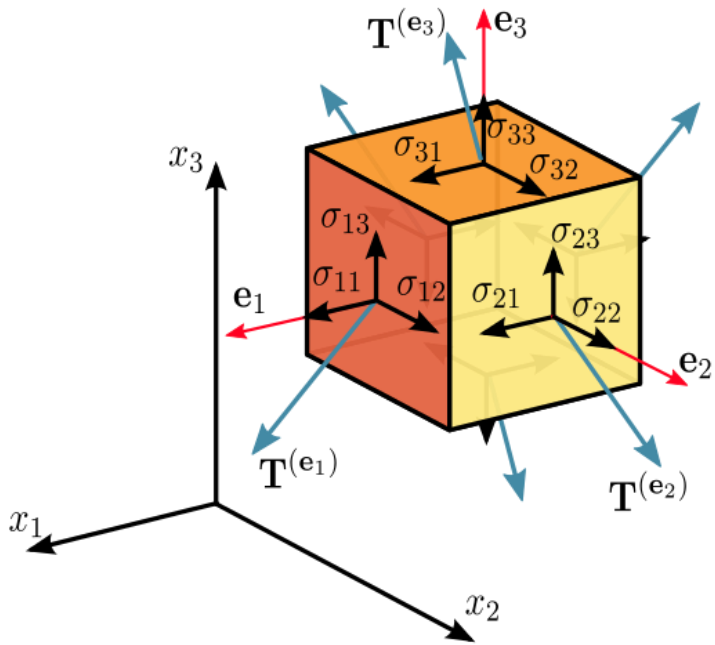

Source: https://en.wikipedia.org/wiki/Cauchy_stress_tensor

Normal and shear stresses

The magnitude of the normal stress component σ_n of any stress vector $\mathbf{T}^{(\mathbf{n})}$ acting on an arbitrary plane with normal unit vector **n** at a given point, in terms of the components σ_{ij} of the stress tensor $\boldsymbol{\sigma}$, is the dot product of the stress vector and the normal unit vector [8]:

$$\begin{aligned}\sigma_{\mathrm{n}} &= \mathbf{T}^{(\mathbf{n})} \cdot \mathbf{n} \\ &= T_i^{(\mathbf{n})} n_i \\ &= \sigma_{ij} n_i n_j .\end{aligned}$$

The magnitude of the shear stress component τ_n, acting orthogonal to the vector **n**, can then be found using the Pythagorean theorem [8]:

$$\begin{aligned}\tau_{\mathrm{n}} &= \sqrt{\left(T^{(\mathbf{n})}\right)^2 - \sigma_{\mathrm{n}}^2} \\ &= \sqrt{T_i^{(\mathbf{n})} T_i^{(\mathbf{n})} - \sigma_{\mathrm{n}}^2},\end{aligned}$$

where: $\left(T^{(\mathbf{n})}\right)^2 = T_i^{(\mathbf{n})} T_i^{(\mathbf{n})} = \left(\sigma_{ij} n_j\right)\left(\sigma_{ik} n_k\right) = \sigma_{ij}\sigma_{ik} n_j n_k$

Cauchy stress tensor

According to Cauchy, the stress at any point in an object assumed as a continuum, is completely defined by the nine stress components. **Cauchy's Law**

The tensor relates a unit-length direction vector **n** to the traction vector $\mathbf{T}^{(\mathbf{n})}$ across an imaginary surface perpendicular to **n**:

$$\mathbf{T}^{(\mathbf{n})} = \mathbf{n} \cdot \boldsymbol{\sigma} \quad \text{or} \quad T_j^{(n)} = \sigma_{ij} n_i \,.$$

Grouping of the nine stress components is known as the **stress tensor** (or stress matrix).

$$\boldsymbol{\sigma} = \begin{bmatrix} \sigma_{11} & \sigma_{12} & \sigma_{13} \\ \sigma_{21} & \sigma_{22} & \sigma_{23} \\ \sigma_{31} & \sigma_{32} & \sigma_{33} \end{bmatrix} \equiv \begin{bmatrix} \sigma_{xx} & \sigma_{xy} & \sigma_{xz} \\ \sigma_{yx} & \sigma_{yy} & \sigma_{yz} \\ \sigma_{zx} & \sigma_{zy} & \sigma_{zz} \end{bmatrix} \equiv \begin{bmatrix} \sigma_x & \tau_{xy} & \tau_{xz} \\ \tau_{yx} & \sigma_y & \tau_{yz} \\ \tau_{zx} & \tau_{zy} & \sigma_z \end{bmatrix}$$

Mohr´s circle

- It was invented by Christian Otto Mohr.
- It is a graphical method used for evaluation of principal stresses, maximum shear stress; normal and tangential stresses on any given plane.

Stress Transformation Equations

$$\sigma_{\mathrm{n}} = \frac{1}{2}(\sigma_x + \sigma_y) + \frac{1}{2}(\sigma_x - \sigma_y)\cos 2\theta + \tau_{xy}\sin 2\theta$$

$$\tau_{\mathrm{n}} = -\frac{1}{2}(\sigma_x - \sigma_y)\sin 2\theta + \tau_{xy}\cos 2\theta$$

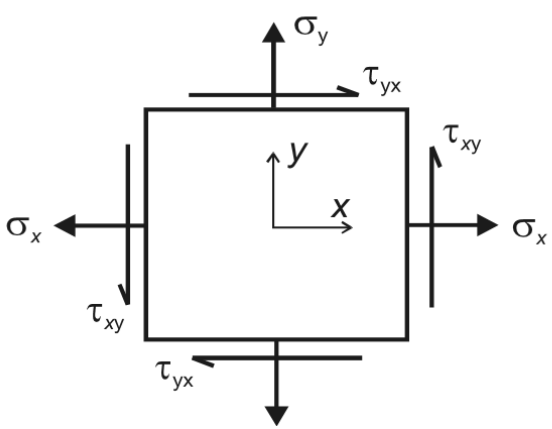

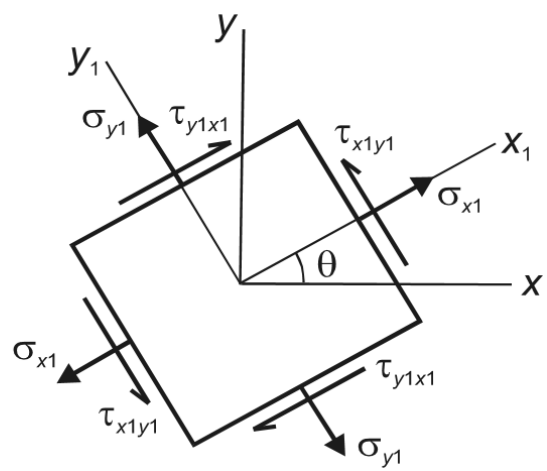

Construct Mohr's circle [9]

1. Determine the point on the body in which the principal stresses are to be determined.
2. Treating the load cases independently and calculated the stresses for the point chosen.
3. Choose a set of x-y reference axes and draw a square element centered on the axes.
4. Identify the stresses σx, σy, and $\tau xy = \tau yx$ and list them with the proper sign.
5. Draw a set of σ - τ coordinate axes with σ being positive to the right and τ being positive in the upward direction. Choose an appropriate scale for each axis.
6. Using the rules on the previous page, plot the stresses on the x face of the element in this coordinate system (point V). Repeat the process for the y face (point H).
7. Draw a line between two point V and H. The point where this line crosses the σ axis establishes the center of the circle.
8. Draw the complete circle.
9. The line from the center of the circle to point V identifies the x axis or reference axis for angle measurements

The Mohr's Circle calculator

The Mohr's Circle calculator is available here:

https://mechanicalc.com/calculators/mohrs-circle/

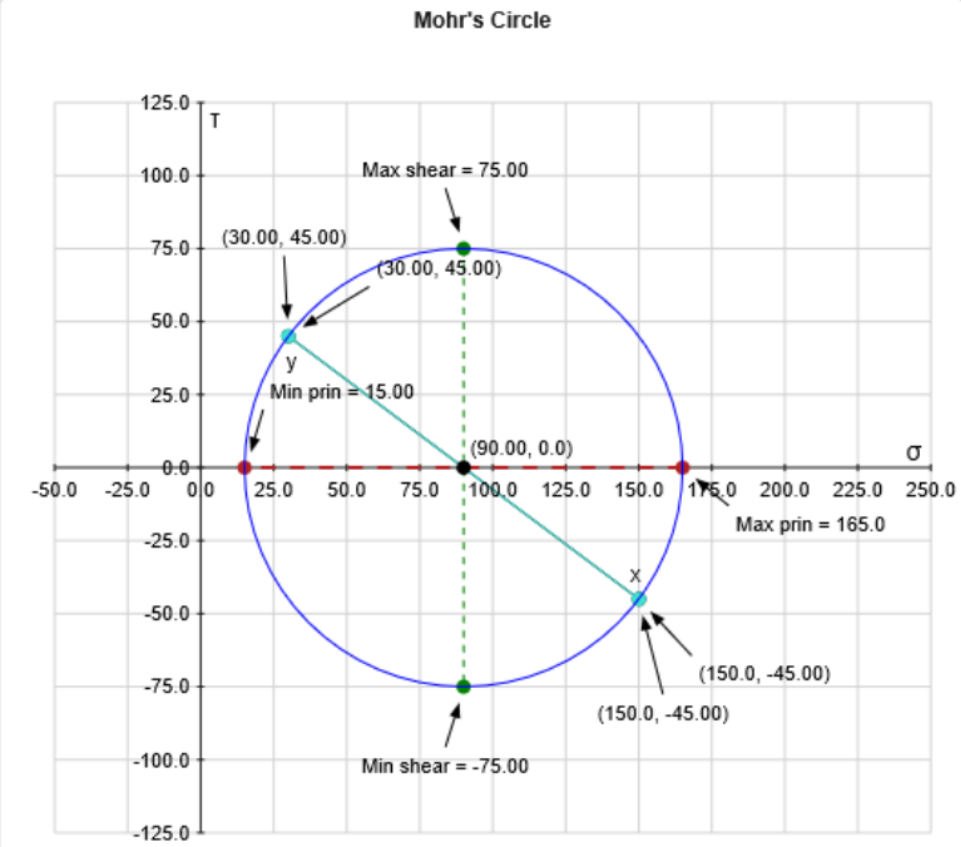

Stress On Unrotated Element

Normal Stress, X:	150
Normal Stress, Y:	30
Shear Stress on Y Face:	45

Results

	Value	Angle [deg]
Rotated Element, Normal Stress X	150.0	0.000˚
Rotated Element, Normal Stress Y	30.00	90.00˚
Rotated Element, Shear Stress	45.00	---
Max Principal Stress	165.0	18.43˚
Min Principal Stress	15.00	108.4˚
Max Extreme Shear Stress	75.00	63.43˚
Min Extreme Shear Stress	-75.00	153.4˚

Variables obtained using stress tensor

- **Maximum shear stress** is equal to one-half the difference between the largest and smallest principal stresses, and acts on the plane that bisects the angle between the directions of the largest and smallest principal stresses.

$$\tau_{\max} = \frac{1}{2}\left|\sigma_{\max} - \sigma_{\min}\right|$$

- **Piola–Kirchhoff stress tensor** express the stress relative to the reference configuration.

The 1st Piola–Kirchhoff stress tensor P relates forces in the present configuration with areas in the reference configuration

$$\boldsymbol{P} = J\,\boldsymbol{\sigma}\,\boldsymbol{F}^{-T}$$

where

F is the deformation gradient

J = det F is the Jacobian determinant.

Variables obtained using stress tensor [10]

	σ	P	S	τ	T	M
$\sigma =$	σ	$J^{-1}PF^T$	$J^{-1}FSF^T$	$J^{-1}\tau$	$J^{-1}RTF^T$	$J^{-1}F^{-T}MF^T$
$P =$	$J\sigma F^{-T}$	P	FS	τF^{-T}	RT	$F^{-T}M$
$S =$	$JF^{-1}\sigma F^{-T}$	$F^{-1}P$	S	$F^{-1}\tau F^{-T}$	$U^{-1}T$	$C^{-1}M$
$\tau =$	$J\sigma$	PF^T	FSF^T	τ	RTF^T	$F^{-T}MF^T$
$T =$	$JR^T\sigma F^{-T}$	R^TP	US	$R^T\tau F^{-T}$	T	$U^{-1}M$
$M =$	$JF^T\sigma F^{-T}$	F^TP	CS	$F^T\tau F^{-T}$	UT	M
$J = \det(F), \quad C = F^TF = U^2, \quad F = RU$						
$P = J\sigma F^{-T}, \quad \tau = J\sigma, \quad S = JF^{-1}\sigma F^{-T}, \quad T = R^TP, \quad M = CS$						

Where:
Cauchy stress tensor (σ)
First Piola-Kirchhoff stress tensor (P)
Second Piola-Kirchhoff stress tensor (S)
Kirchhoff stress tensor (τ)
Biot stress tensor (T)
Mandel stress tensor (M)
Rotation tensor (R)

Types of Failure

- Fracture via crack development and propagation (brittle, ductile, low- and high-cycle fatigue, etc.)
- Yielding via plastic (permanent) deformation of ductile materials
- Low (High) Stiffness due to softening (hardening) caused by aging (cyclic loading, cold work, environmental effects, etc.)
- Instability via buckling (abrupt decrease in stiffness with loading)
- Creep slow increase of deformation (mostly at high temperature)

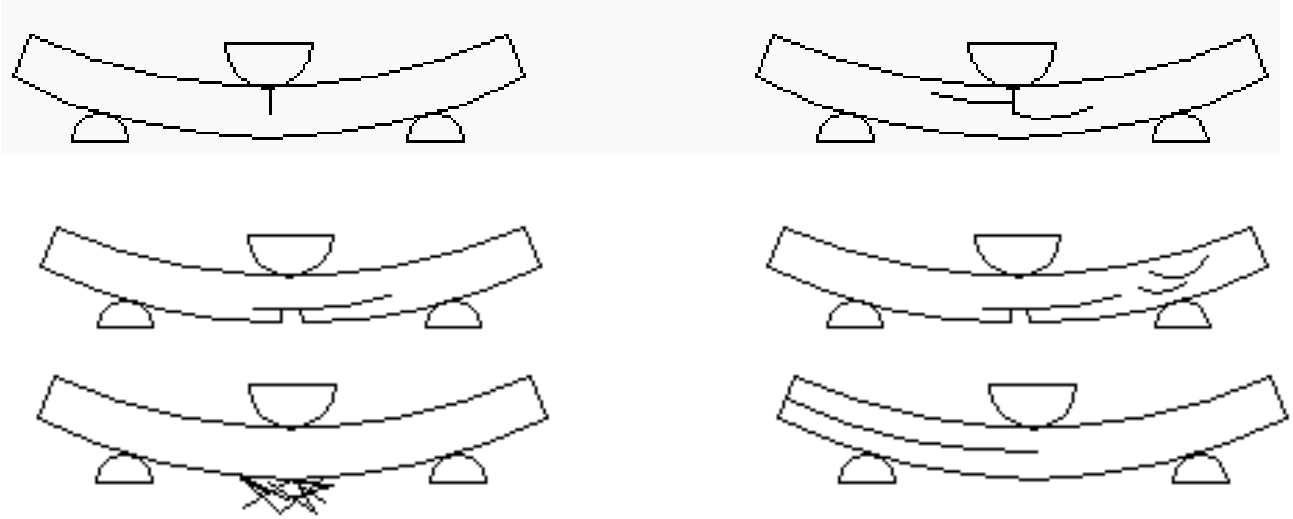

Material failure criteria

The failure of the materials are classified into:

- brittle failure
- ductile failure

Types of material failure depending on the scale in which the material is examined:

- Microscopic failure
- Macroscopic failure

Macroscopic failure

Type of macroscopic failure

- Damage failure
- Empirical failure
- Energy type failure (S-criterion, T-criterion)
- Stress or strain failure

Criteria used to predict the failure of materials

Failure of brittle materials

- Phenomenological failure criteria
- Linear elastic fracture mechanics
- Elastic-plastic fracture mechanics
- Energy-based methods
- Cohesive zone methods

Ductile material failure criteria

- the maximum shear stress criterion
- the von Mises yield criterion or distortional strain energy density criterion
- the Gurson yield criterion for pressure-dependent metals
- the Hosford yield criterion for metals
- the Hill yield criteria
- various criteria based on the invariants of the Cauchy stress tensor

UPenAUTO : 2017-1-ES01-KA203-03858 Erasmus+

Yield surface

A yield surface is a five-dimensional surface in the six-dimensional space of stresses.

Type of yield surfaces [11]

- *Tresca yield criterion* is known as the maximum shear stress

$$\frac{1}{2}\max(|\sigma_1 - \sigma_2|, |\sigma_2 - \sigma_3|, |\sigma_3 - \sigma_1|) = S_{sy} = \frac{1}{2}S_y$$

where

S_{sy} is the yield strength in shear, and S_y is the tensile yield strength.

- *von Mises yield criterion* is expressed in the principal stresses

$$(\sigma_1 - \sigma_2)^2 + (\sigma_2 - \sigma_3)^2 + (\sigma_3 - \sigma_1)^2 = 2{S_y}^2$$

where

Sy is the yield strength in uniaxial tension

Yield surface

Burzyński-Yagn criterion represents the general equation of a second order surface of revolution about the hydrostatic axis [11].

$$3I_2' = \frac{\sigma_{\text{eq}} - \gamma_1 I_1}{1-\gamma_1}\frac{\sigma_{\text{eq}} - \gamma_2 I_1}{1-\gamma_2}$$

Mohr–Coulomb yield criterion is similar to the Tresca criterion, with additional provisions for materials with different tensile and compressive yield strength [11].

$$\frac{m+1}{2}\max\Big(|\sigma_1-\sigma_2|+K(\sigma_1+\sigma_2)\,,\ |\sigma_1-\sigma_3|+K(\sigma_1+\sigma_3)\,,\ |\sigma_2-\sigma_3|+K(\sigma_2+\sigma_3)\Big) = S_{yc}$$

Drucker–Prager yield criterion is similar to the von Mises yield criterion, with provisions for handling materials with different tensile and compressive yield strengths [11].

$$\left(\frac{m-1}{2}\right)(\sigma_1+\sigma_2+\sigma_3)+\left(\frac{m+1}{2}\right)\sqrt{\frac{(\sigma_1-\sigma_2)^2+(\sigma_2-\sigma_3)^2+(\sigma_3-\sigma_1)^2}{2}} = S_{yc}$$

Yield surface

Bresler–Pister yield criterion is an extension of the Drucker Prager yield criterion that uses three parameters and has additional terms for materials that yield under hydrostatic compression [11].

$$S_{yc} = \frac{1}{\sqrt{2}}\left[(\sigma_1 - \sigma_2)^2 + (\sigma_2 - \sigma_3)^2 + (\sigma_3 - \sigma_1)^2\right]^{1/2} - c_0 - c_1\,(\sigma_1 + \sigma_2 + \sigma_3) - c_2\,(\sigma_1 + \sigma_2 + \sigma_3)^2$$

Willam–Warnke yield criterion is a three-parameter smoothed version of the Mohr–Coulomb yield criterion that has similarities in form to the Drucker–Prager and Bresler–Pister yield criteria [11].

$$f(I_1, J_2, J_3) = 0$$

Bigoni–Piccolroaz yield surface is a seven-parameter surface defined by [11]

$$f(p, q, \theta) = F(p) + \frac{q}{g(\theta)} = 0$$

2. Finite element method

- The finite element method (FEM) is a method for solving problems that divides a structure into small piece of structure that are called finite elements.
- A finite element method is characterized by a variational formulation, a discretization strategy, one or more solution algorithms and post-processing procedures.
- The FEM methods obtain only "approximate" solutions and have "inherent" errors.

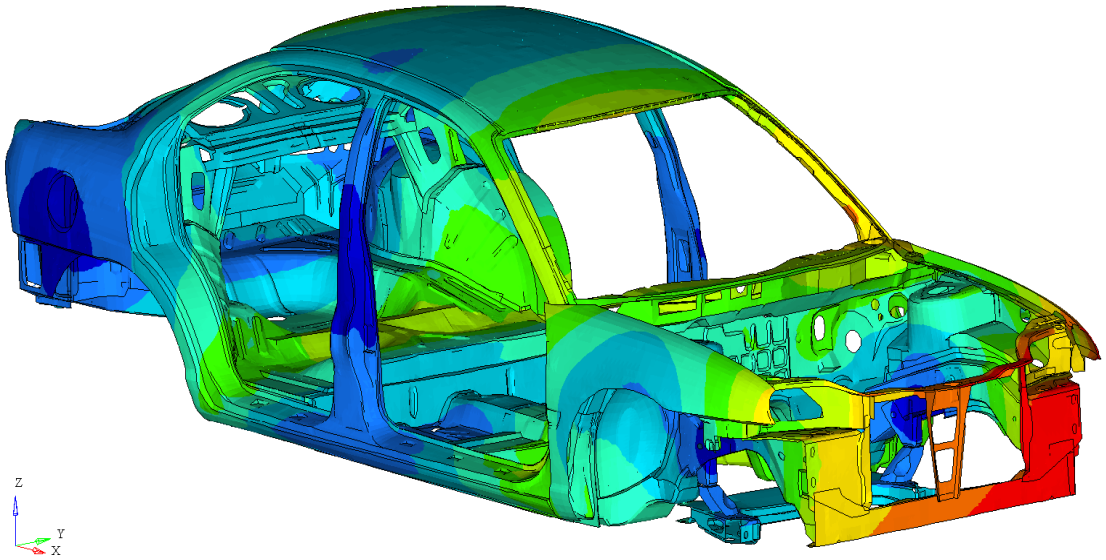

Types of Finite Element Method [12]

- **Extended Finite Element Method (XFEM) -** works through the expansion of the shape functions with Heaviside step functions.
- **Generalized Finite Element Method (GFEM) -** shape functions are primarily defined by the global coordinates and further multiplied by partition-of-unity to create local elemental shape functions.
- **Mixed Finite Element Method -** extra independent variables are introduced as nodal variables during the discretization of a partial differential equation problem.
- **hp-FEM -**is a combination of automatic mesh refinement (h-refinement) and an increase in the order of polynomial (p-refinement)
- **Discontinuous Galerkin methods** is a finite element method formulated relative to a weak formulation of a particular model system.

The global equation for element

[K]{d}={F}

[K] – Stiffness matrix

{d} - displacement

{F} – force

Obtaining unknown variables at nodes by solving the equation

$\{d\}=[K]^{-1}\{F\}$

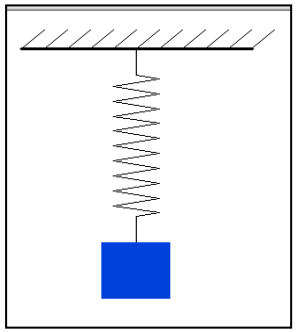

$\{d\}=[K]^{-1}\{F\}$

Stiffness matrix represents the system of linear equations that must be solved in order to ascertain an approximate solution to the differential equation.

UPenAUTO : 2017-1-ES01-KA203-03858

The Stiffness matrix calculation for the element of truss type

Direct Method

There is considered the finite element i represented by a truss, of constant stiffness for which there are permitted only the displacements along the axis Ox [14]

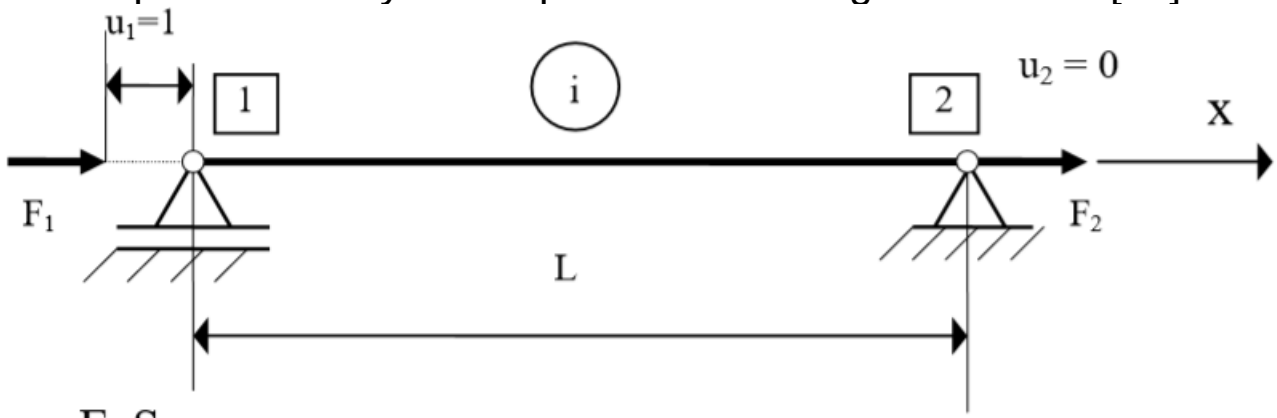

$$F_1 = K_{11} = \frac{E \cdot S}{L}; \; F_2 = K_{21} = -\frac{E \cdot S}{L}$$

$$F_1 + F_2 = 0$$

$$\{F\} = \begin{Bmatrix} F_1 \\ F_2 \end{Bmatrix} = \begin{bmatrix} K_{11} & K_{12} \\ K_{21} & K_{22} \end{bmatrix} \cdot \begin{Bmatrix} 1 \\ 0 \end{Bmatrix}$$

where:

F - axial forces

S - cross section area

The Stiffness matrix calculation for the element of truss type

Direct Method

If in the node 2 there is imposed a displacement u2 = 1, respectively, for the node 1 there is imposed u1 = 0, [14]

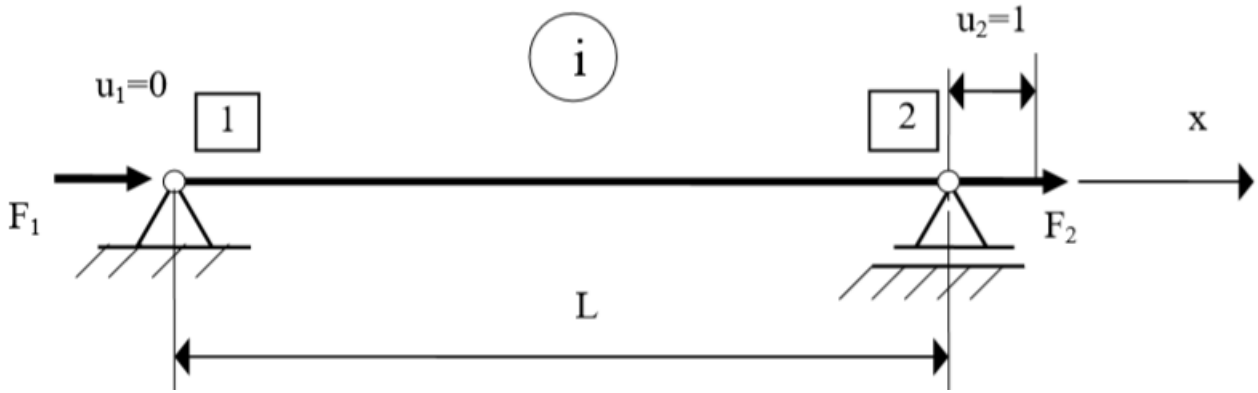

$$F_2 = K_{22} = \frac{E \cdot S}{L}; \quad F_1 = K_{12} = -\frac{E \cdot S}{L}$$

where:
F - axial forces
S - cross section area

$$[K_i] = \begin{bmatrix} K_{11} & K_{12} \\ K_{21} & K_{22} \end{bmatrix} = \frac{E \cdot S}{L} \begin{bmatrix} 1 & -1 \\ -1 & 1 \end{bmatrix}$$

The Stiffness matrix calculation for the element of truss type

Indirect Method

The displacement of an arbitrary point M on the direction of axis x, can be approximated by an interpolation polynomial of the form: [14]

$$U(x) = a_1 x + a_2$$

$$[U(x)] = [f] \cdot \{a\}$$

$$[f] = [x \quad 1]; \; \{a\} = \begin{Bmatrix} a_1 \\ a_2 \end{Bmatrix}$$

$$\begin{cases} u_1 = a_2 \\ u_2 = a_1 L + a_2 \end{cases}$$

$$\{U_e\} = \begin{Bmatrix} u_1 \\ u_2 \end{Bmatrix} = \begin{bmatrix} 0 & 1 \\ L & 1 \end{bmatrix} \cdot \begin{Bmatrix} a_1 \\ a_2 \end{Bmatrix} = [A] \cdot \{a$$

$$\begin{bmatrix} 0 & 1 \\ L & 1 \end{bmatrix} = [A]. \qquad \{a\} = [A]^{-1} \cdot \{U_e\}$$

$$[A]^{-1} = \begin{bmatrix} -\frac{1}{L} & \frac{1}{L} \\ 1 & 0 \end{bmatrix}$$

$$\{U(x)\} = [x \quad 1] \cdot \begin{bmatrix} -\frac{1}{L} & \frac{1}{L} \\ 1 & 0 \end{bmatrix} \cdot \begin{Bmatrix} u_1 \\ u_2 \end{Bmatrix} = \begin{bmatrix} 1 - \frac{x}{L} & \frac{x}{L} \end{bmatrix} \cdot \begin{Bmatrix} u_1 \\ u_2 \end{Bmatrix}$$

or: $$\{U(x)\} = [N]\{U_e\}$$

$$[N] = \begin{bmatrix} 1 - \frac{x}{L} & \frac{x}{L} \end{bmatrix}$$

Interpolation

The interpolation functions must meet the continuity conditions and the convergence conditions of the approximate solution.

The interpolation functions are most often polynomial forms of the independent variables, derived to satisfy certain required conditions at the nodes.

- For axial loaded beams – it must satisfy the continuity of the displacement function u(x).
- For the bending loaded beams - it must satisfy the continuity of the displacement function v(x) and must be secured too the continuity of the derivative dv/dx.

The continuity and convergence conditions can be wholly satisfied if the interpolation polynomials are of an order at least equal with the highest order of derivation which appears in the differential relations between deformations and displacements [15].

Lagrange generalized polynomials is recommended when the functions meet the continuity conditions.

Interpolation Polynomials from Class C^0

Tensile or Torsion Loaded Beam Type Element

It considers a beam type element of length L, for which in the nodes 1 and 2 we it knows the parameters of the nodal displacements u1 and u2 [14]

- first order interpolation polynomial of the form

$$u(x)= c_2x+ c_1$$

Tensile compression: $u(x)=N_1\, u_1+ N_2\, u_2$

Torsion: $\varphi(x)= N_1\, \varphi_1+ N_2\, \varphi_2$

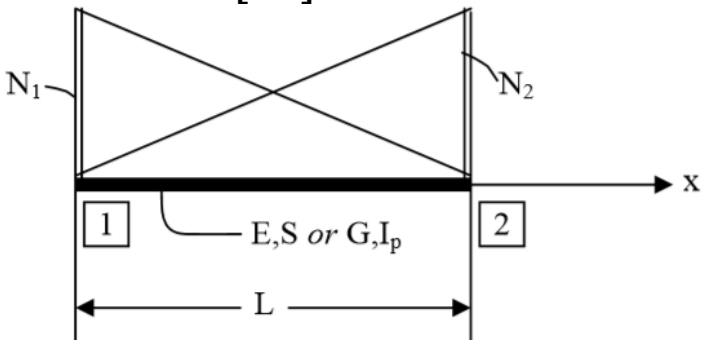

The boundary conditions for the polynomials of the form:

$$x=0,\ \Rightarrow u=u_1\ (\varphi=\varphi_1), \quad \text{and} \quad x=L,\ \Rightarrow u=u_2,\ (\varphi=\varphi_2)$$

$$\begin{cases} u_1 = c_1 \\ u_2 = c_1L + c_2 \end{cases} \qquad \begin{cases} c_1 = \dfrac{u_2}{L} - \dfrac{u_1}{L} \\ c_2 = u_1 \end{cases}$$

$$u(x)= c_2x+ c_1 = \begin{bmatrix} x & 1 \end{bmatrix} \cdot \begin{Bmatrix} c_1 \\ c_2 \end{Bmatrix}$$

$$u(x) = \left(\frac{u_2}{L} - \frac{u_1}{L}\right)x + u_1 = \left(1 - \frac{x}{L}\right)u_1 + \frac{x}{L}u_2$$

$$\begin{cases} N_1 = 1 - \dfrac{x}{L} \\ N_2 = \dfrac{x}{L} \end{cases}$$

$$u(x) = \begin{bmatrix} \left(1 - \dfrac{x}{L}\right) & \dfrac{x}{L} \end{bmatrix} \cdot \begin{Bmatrix} u_1 \\ u_2 \end{Bmatrix} = \begin{bmatrix} N_1 & N_2 \end{bmatrix} \cdot \begin{Bmatrix} u_1 \\ u_2 \end{Bmatrix}$$

Lagrange Interpolation

The discrete points are represented by the nodes situated on one of the element sides. The shape functions Ni are [14]:

$$N_i = \frac{\prod_{j=1, i\neq j,}^{m+1} (x - x_j)}{\prod_{j=1, i\neq j,}^{m+1} (x_i - x_j)}$$

$$N_1 = \frac{(x - x_2)(x - x_3)\ldots(x - x_{m+1})}{(x_1 - x_2)(x_1 - x_3)\ldots(x_1 - x_{m+1})}$$

$$N_1 = \frac{(x - x_1)(x - x_2)\ldots(x - x_{m+1})}{(x_2 - x_1)(x_2 - x_3)\ldots(x_2 - x_{m+1})}$$

.

$$N_{m+1} = \frac{(x - x_2)(x - x_3)\ldots(x - x_m)}{(x_{m+1} - x_1)(x_{m+1} - x_2)\ldots(x_{m+1} - x_m)}$$

For the one-dimensional finite element, considering the linear functions parameters u(x), (m=1), as follows: x1=0 ⇒u(x1)=u1; - x2=L ⇒u(x2)=u2,

$$u(x) = \frac{(x - L)}{-L} u_1 + \frac{x}{L} u_2 = \underbrace{\left(1 - \frac{x}{L}\right)}_{N_1} u_1 + \underbrace{\frac{x}{L}}_{N_2} u_2$$

Lagrange Interpolation

Bilinear rectangular finite element

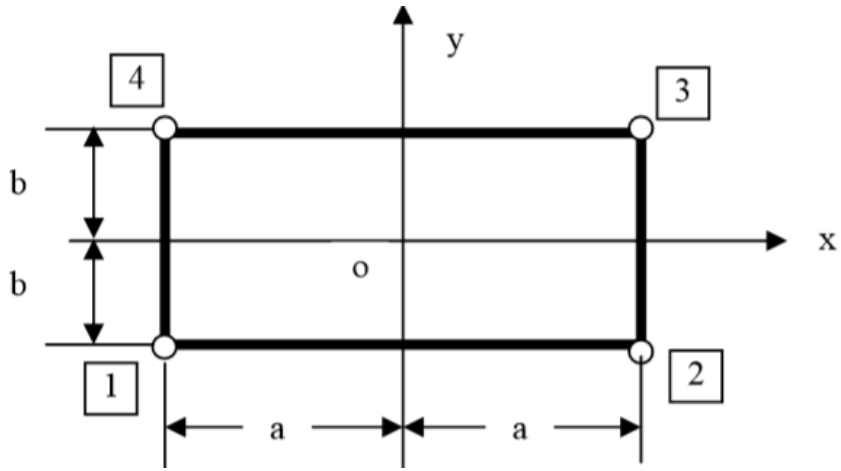

For a polynomial of the first order, m=1, on the lower side between the node 1 and 2, in which: x1=-a⇒u(x1)=u1; x2=a ⇒u(x2)=u2 [14]

$$u(x)_{1,2} = \frac{x_2 - x}{x_2 - x_1} u_1 + \frac{x_1 - x}{x_1 - x_2} u_2 = \frac{a - x}{2a} u_1 + \frac{x + a}{2a} u_2$$

On the upper side between the nodes 3 and 4, in which: x1=-a⇒u(x1)=u4; x2=a ⇒u(x2)=u3 [14];

$$u(x)_{4,3} = \frac{x_2 - x}{x_2 - x_1} u_4 + \frac{x_1 - x}{x_1 - x_2} u_3 = \frac{a - x}{2a} u_4 + \frac{x + a}{2a} u_3$$

Interpolating according to direction y on the sides 1-4 and 2-3 [14] :

$$u(x,y) = \frac{y_2 - y}{y_2 - y_1} u_{1,2} + \frac{y_1 - y}{y_1 - y_2} u_{4,3} =$$

$$= \frac{b-y}{2b}\frac{a-x}{2a} u_1 + \frac{b-y}{2b}\frac{x+a}{2a} u_2 + \frac{y+b}{2b}\frac{a-x}{2a} u_4 + \frac{y+b}{2b}\frac{x+a}{2a} u_3 =$$

$$= \frac{(a-x)(b-y)}{4ab} u_1 + \frac{(a+x)(b-y)}{4ab} u_2 + \frac{(a+x)(b+y)}{4ab} u_3 + \frac{(a-x)(b+y)}{4ab} u_4$$

Lagrange Interpolation

Trilinear rectangular solid finite element [14]

$$N_i = \frac{[a + \mathrm{sign}(x)\cdot x]\cdot[b + \mathrm{sign}(y)\cdot y]\cdot[c + \mathrm{sign}(z)\cdot z]}{8abc}$$

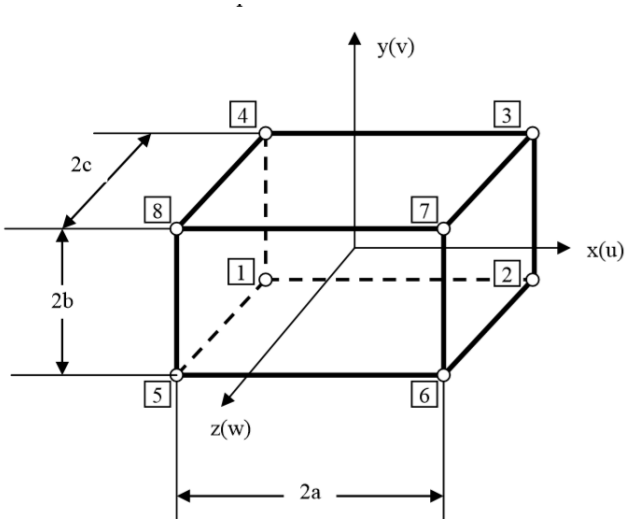

The interpolation functions for the displacement vector components are:

$$\begin{Bmatrix} u(x,y,z) \\ v(x,y,z) \\ w(x,y,z) \end{Bmatrix} = \begin{bmatrix} N_1 & 0 & 0 & N_2 & 0 & 0 & N_3 & 0 & 0 & N_4 & 0 & 0 \\ 0 & N_1 & 0 & 0 & N_2 & 0 & 0 & N_3 & 0 & 0 & N_4 & 0 \\ 0 & 0 & N_1 & 0 & 0 & N_2 & 0 & 0 & N_3 & 0 & 0 & N_4 \end{bmatrix} \cdot \begin{Bmatrix} u_1 \\ v_1 \\ w_1 \\ u_2 \\ v_2 \\ w_2 \\ u_3 \\ v_3 \\ w_3 \\ u_4 \\ v_4 \\ w_4 \end{Bmatrix}$$

Interpolation polynomials of Class C^1

The linear displacement v(x) - polynomial of the third order [14]

$$v(x) = c_1 x^3 + c_2 x^2 + c_3 x + c_4$$

$$v(x) = \underbrace{\begin{bmatrix} x^3 & x^2 & x & 1 \end{bmatrix}}_{[p]} \cdot \underbrace{\begin{Bmatrix} c_1 \\ c_2 \\ c_3 \\ c_4 \end{Bmatrix}}_{\{c\}}$$

The angular displacements function [14]

$$\varphi(x) = \frac{dv}{dx} = 3c_1 x^2 + 2c_2 x + c_3$$

The boundary conditions are:

$$x = 0, \quad v = v_1;$$

$$x = L, \quad v = v_2;$$

$$x = 0, \quad \varphi = \varphi_1 = \frac{dv}{dx};$$

$$x = L, \quad \varphi = \varphi_2 = \frac{dv}{dx}$$

After imposing the conditions:

$$\underbrace{\begin{Bmatrix} v_1 \\ \varphi_1 \\ v_2 \\ \varphi_2 \end{Bmatrix}}_{\{U_e\}} = \underbrace{\begin{bmatrix} 0 & 0 & 0 & 1 \\ 0 & 0 & 1 & 0 \\ L^3 & L^2 & L & 1 \\ 3L^2 & 2L & 1 & 0 \end{bmatrix}}_{[A]} \cdot \underbrace{\begin{Bmatrix} c_1 \\ c_2 \\ c_3 \\ c_4 \end{Bmatrix}}_{c}$$

$$[A]^{-1} = \frac{1}{L^3} \begin{bmatrix} 2 & L & -2 & L \\ -3L & -2L^2 & 3L & -L^2 \\ 0 & L^2 & 0 & 0 \\ L^3 & 0 & 0 & 0 \end{bmatrix}$$

Interpolation Functions for the Triangular Finite Element

Interpolation function of the form [14]:

$$\Phi = \sum N_i \Phi_i$$

where: Φ_i- is the nodal displacement on the direction of the degree of freedom i;

$N_i = N_i(L_1, L_2, L_3)$ shape functions;

L_1, L_2, L_3 are the triangular coordinates

The interpolation functions

$$\Phi = \sum_{i=1}^{n} c_i \left(L_1^q, L_2^r, L_3^s\right)$$

where:
q, r, s - are arrangements for n possible combinations which respect the condition q + r +s =p, and p represents the order of the interpolation polynomial;
c_i - represents the polynomial coefficients

Boundary conditions

Boundary conditions are used to specify the loading applied to a solid.

- *Displacement boundary conditions* - it may prescribe u 1 , u 2 , u 3 , or all three. If only the u 1 component of displacement is prescribed, then the force will act in the e 1 direction. If u 2 is prescribed, the force acts in direction e 2, and so on.
- *Symmetry conditions* - finite element codes can automatically enforce symmetry and anti-symmetry boundary conditions
- *Prescribed forces* - any node in a finite element mesh may be subjected to a prescribed force.
- *Distributed loads* - a solid may be subjected to distributed pressure or traction acting on its boundary.
- *Default boundary condition at boundary nodes* - if no displacements or forces are prescribed at a boundary node, and no distributed loads act on any element faces connected to that node, then the node is assumed to be free of external force.

Boundary conditions

Problems with boundary solutions

- Equilibrium problems - must find the displacement in the equilibrium state or the stress distribution
- Eigenvalue problems - must determine the critical values of certain parameters which appear in their formulation and natural frequencies.
- Problems of propagation - appears in finding the response of the solid body which is subject under variable loads in time.

The basic types of boundary conditions [15]

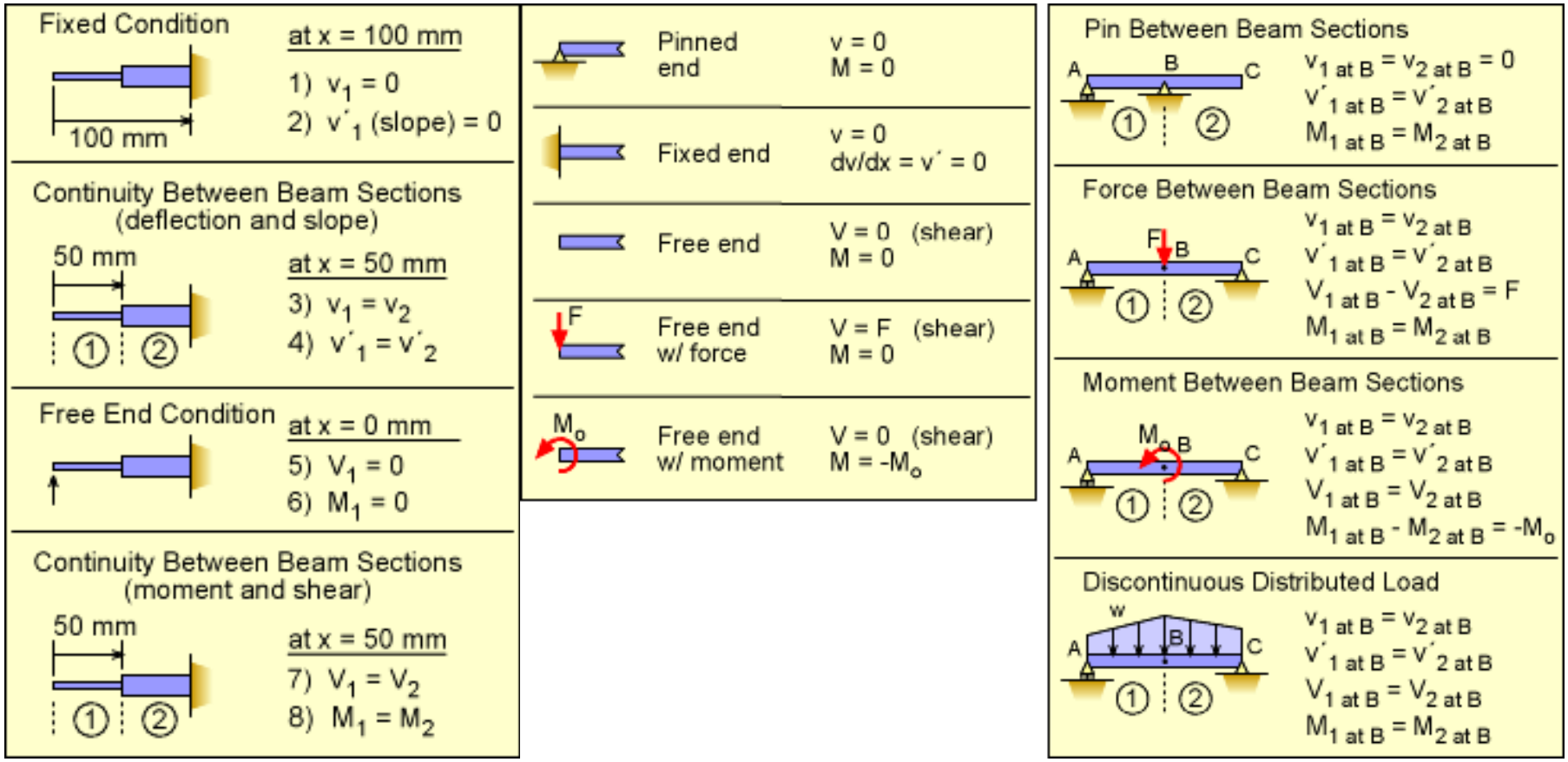

Constraints

Constraints are boundary conditions that represent physical characteristics such as connections, surfaces, and thermal boundaries.

Type of constrains:

- ✓ Structural
  - Fixed
  - No Translation
  - No Rotation
  - Free
- ✓ Pin
- ✓ Frictionless
- ✓ Response Spectrum
- ✓ Thermal

FEA Mesh [17]

A mesh consisting of nodes and elements based on the supplied geometry

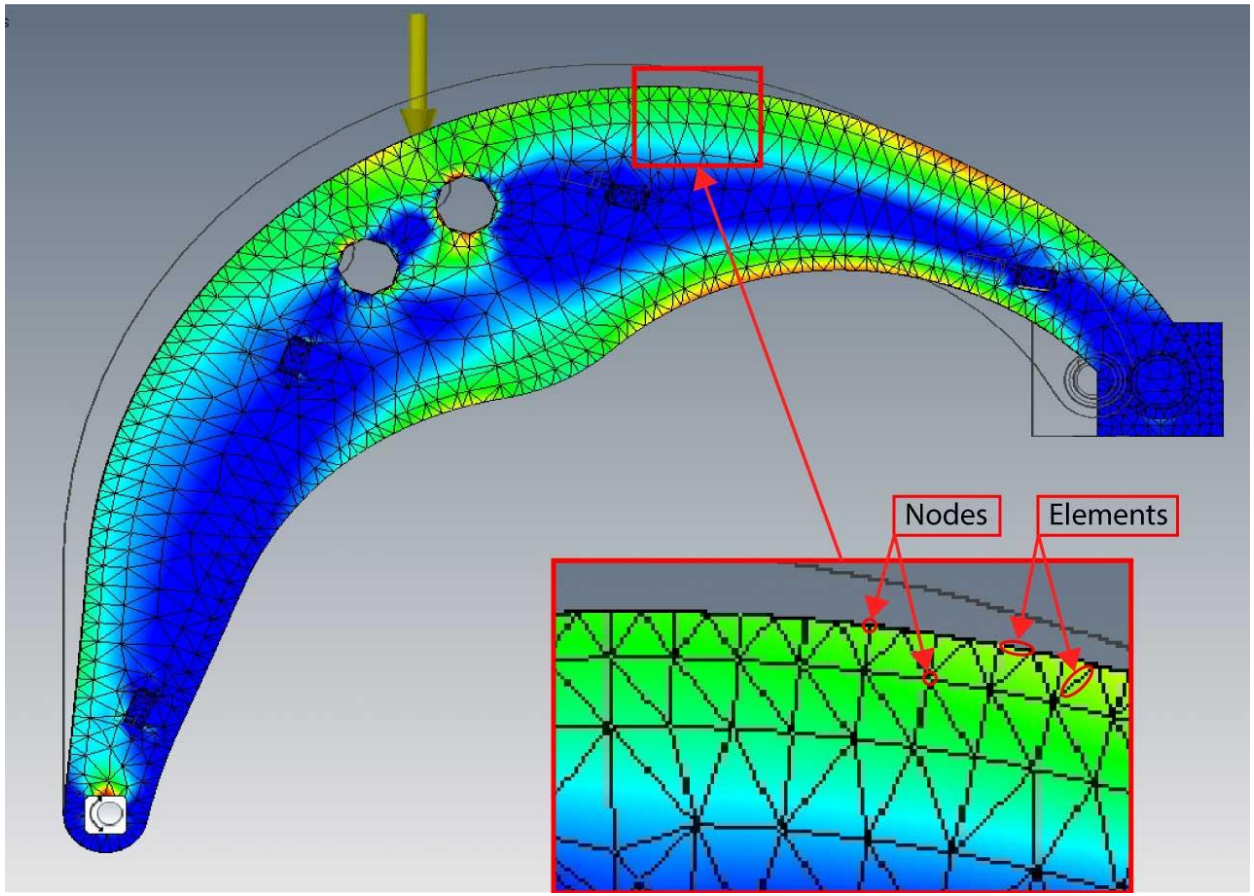

Analysis types of FEA

Types of analysis supported by the finite element method

Linear static analysis

Non-linear static analysis

Linear dynamic

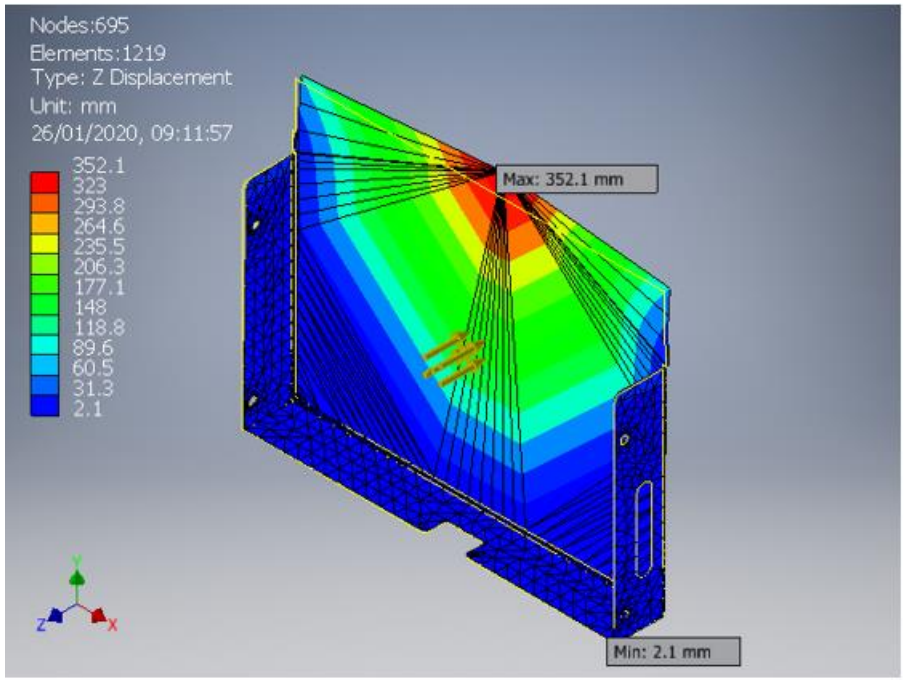

Linear static structural capabilities [16]

- homogeneous/non-homogeneous materials
- isotropic/orthotropic/anisotropic materials
- temperature-dependent material properties
- spring supports
- support displacements: point, line, pressure loads
- body forces (accelerations)
- initial strains (e.g. concrete prestressing tension)
- expansion
- fracture mechanics
- stress stiffening.

Non-linear static structural capabilities

- material non-linearities (e.g. plasticity, creep)
- large strain (gross changes in structure shape)
- large displacements
- gaps (compression only interfaces)
- cables (tension only members)
- friction
- metal forming.

Linear dynamic capabilities

- natural frequencies and modes of vibration
- response to harmonic loading
- general dynamic loading
- response spectrum loading
- power spectral density loading
- spin softening.

Non-linear dynamic capabilities

- time history response of non-linear systems
- large damping effects
- impact with plastic deformation.

Linear steady-state thermal capabilities

- homogeneous/non-homogeneous materials
- isotropic/orthotropic/anisotropic materials
- temperature-dependent material properties
- conduction
- isothermal boundaries
- convection
- heat fluxes
- internal heat generation.

Non-linear thermal capabilities

- radiation (steady state)
- phase change (transient

Results from finite element analysis

Stress analysis results

- ✓ deflections
- ✓ reactions at supports
- ✓ stress components
- ✓ principal stresses
- ✓ equivalent stresses (Tresca, von Mises
- ✓ strains
- ✓ strain energies
- ✓ path integrals and stress intensity for f
- ✓ linearised stresses
- ✓ buckling loads
- ✓ buckling mode shapes.

⊟ Static Analysis:1

General objective and settings:

Design Objective	Parametric Dimension
Study Type	Static Analysis
Last Modification Date	26/01/2020, 09:10
Detect and Eliminate Rigid Body Modes	Yes

Mesh settings:

Avg. Element Size (fraction of model diameter)	0.1
Avg. Element Size in Shells	0.05
Min. Element Size (fraction of avg. size)	0.2
Grading Factor	1.5
Max. Turn Angle	60 deg
Create Curved Mesh Elements	Yes

⊟ Material(s)

Name	Aluminum 6061	
General	Mass Density	0.0975437 lbmass/in^3
	Yield Strength	39885.4 psi
	Ultimate Tensile Strength	44961.7 psi
Stress	Young's Modulus	9993.1 ksi
	Poisson's Ratio	0.33 ul
	Shear Modulus	3756.8 ksi
Part Name(s)	108-4-1-1.ipt	

Results from dynamic analysis [15]

- ✓ natural frequencies
- ✓ natural mode shapes
- ✓ phase angles
- ✓ participation factors
- ✓ dynamic analysis
- ✓ responses to loading
- ✓ displacements
- ✓ velocities
- ✓ accelerations
- ✓ reactions
- ✓ stresses
- ✓ strains.

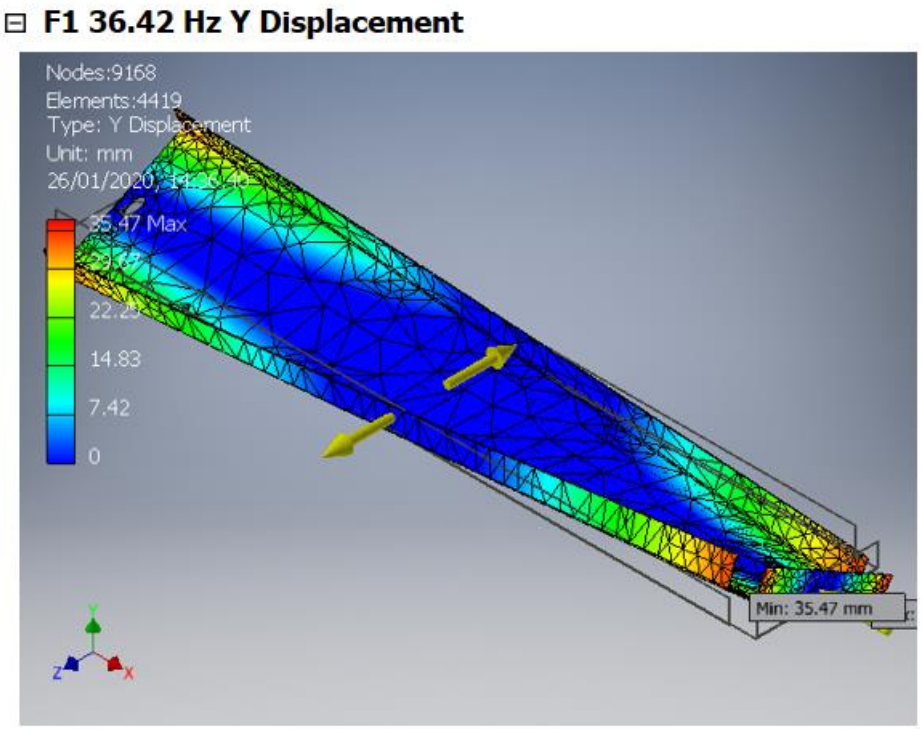

Results for thermal stress analysis

- temperatures
- heat fluxes.

General information generated by a thermal stress analysis

- displaced shape plots
- symbols showing the magnitude of reaction forces, heat fluxes
- contour plots of stresses, strains, displacements, temperatures,
- vector plots showing the direction and magnitude of principal stresses

Buckling Analysis

Buckling refers to the loss of stability of a component and is usually independent of material strength.

Long columns can be analysed with the Euler column formula

$$F = n \pi^2 E I / L^2$$

where

F = allowable load (lb, N)

n = factor accounting for the end conditions

E = modulus of elasticity (lb/in^2, Pa (N/m^2))

L = length of column (in, m)

I = Moment of inertia (in^4, m^4)

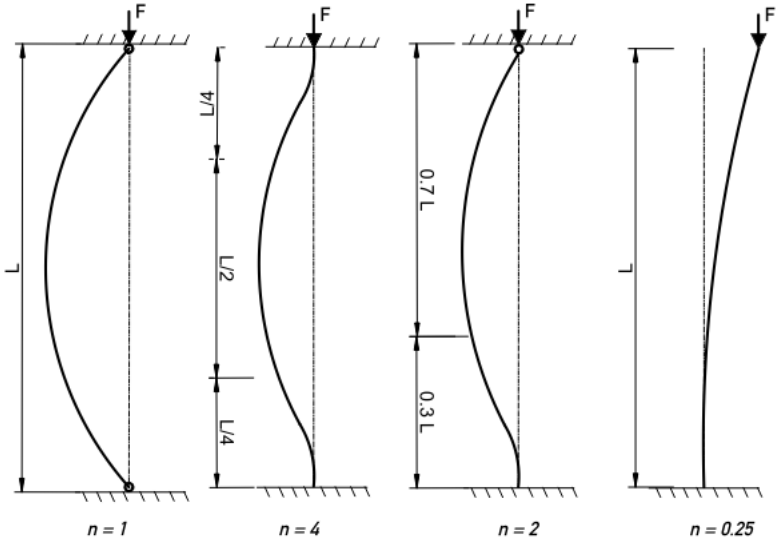

Buckling Analysis

The critical stress

$$\sigma_{cr} = \frac{P_{cr}}{A} = \frac{\pi^2 E}{\left(K\frac{L}{r}\right)^2}$$

Where:

- σ_{cr} is the critical stress (the average stress at which the column will buckle),
- P_{cr} is the critical force (the applied force at which the column will buckle)
- A is the cross-sectional area,
- L is the unsupported length of the column,
- r is the radius of gyration of the cross section,
- E is the elastic modulus of the material
- K is the effective length factor and accounts for the end conditions of the column

End Condition:	Pinned-Pinned	Fixed-Fixed	Fixed-Pinned	Fixed-Free
Illustration:				
Theoretical Effective Length Factor, K:	1	0.5	0.699	2
Recommended Effective Length Factor, K:	1	0.9	0.9	2.1

$$\sigma_c = \pi^2 E \left(\frac{r}{L}\right)^2 \quad \text{circular cross section}$$

$$\sigma_c = \frac{\pi^2 E}{12}\left(\frac{h}{L}\right)^2 \quad \text{rectangular cross section}$$

UPenAUTO : 2017-1-ES01-KA203-03858

Erasmus+

Steps for Finite Element analysis using software

1. Select analysis type
2. Select element type
3. Specify material properties
4. Make nodes
5. Build elements by assigning connectivity
6. Apply boundary conditions and loads
7. Solve the boundary value problems
8. Display the results

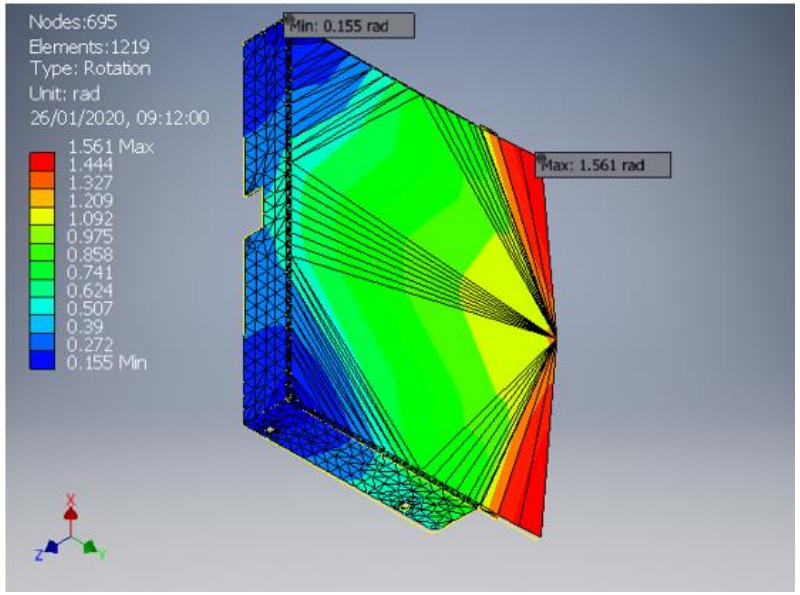

Steps for finite element calculation

1. The geometry of the solid. This is done by generating a finite element **mesh for the solid**.

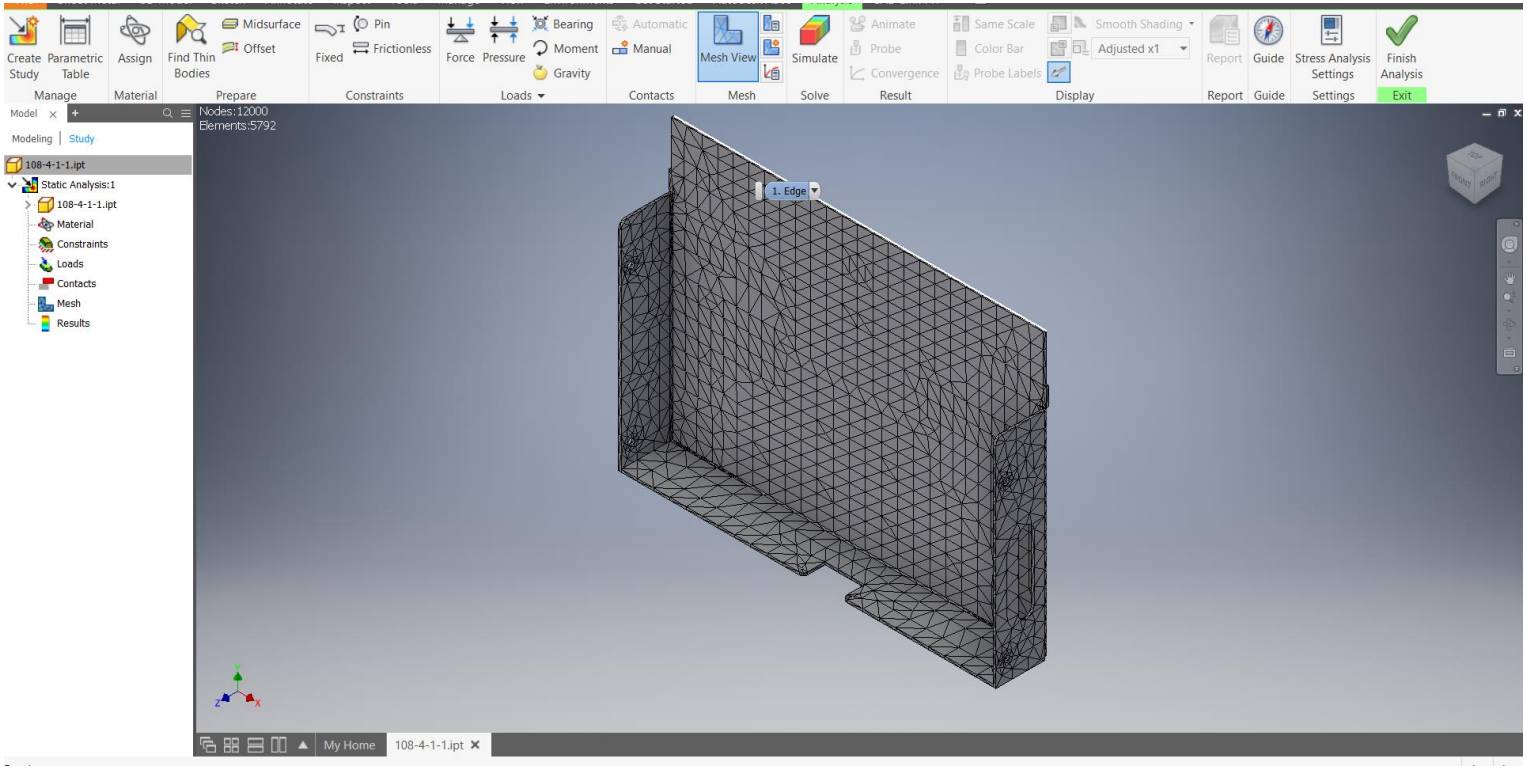

Steps for finite element calculation

2. The **properties of the material**. This is done by specifying a constitutive law for the solid.

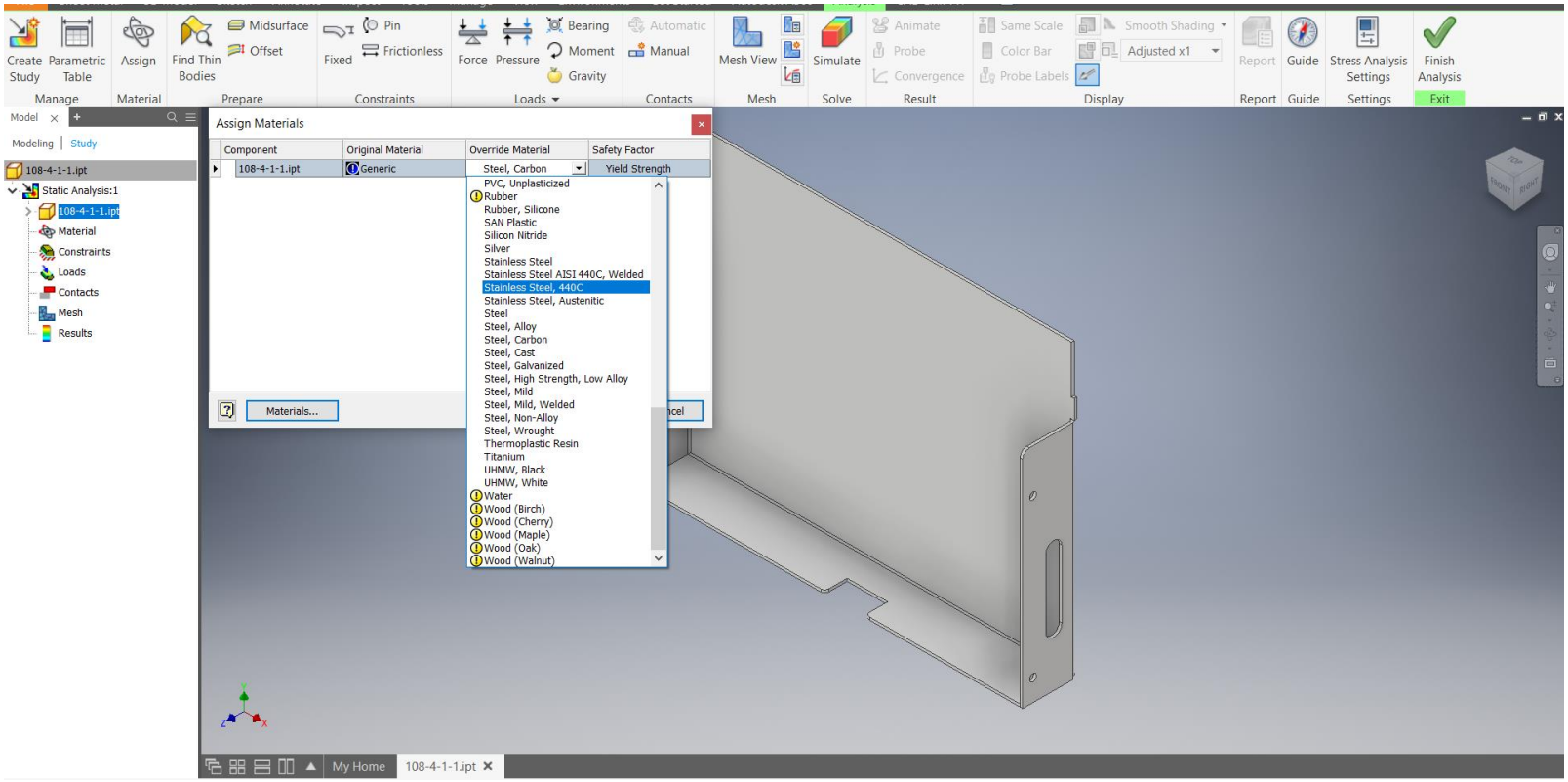

Steps for finite element calculation

3. The **nature of the loading applied** to the solid. This is done by specifying the boundary conditions

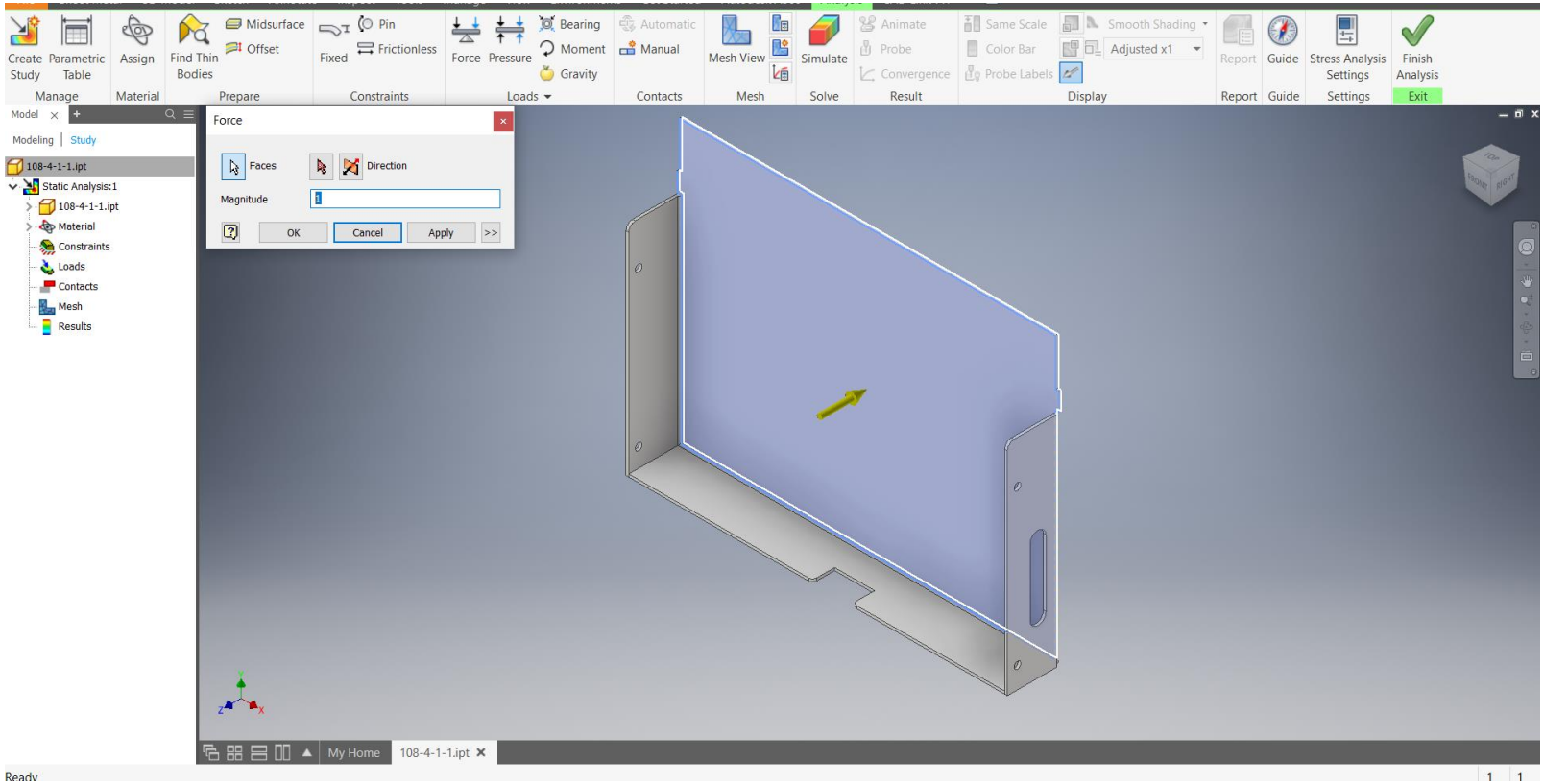

Steps for finite element calculation

4. Simulate and run

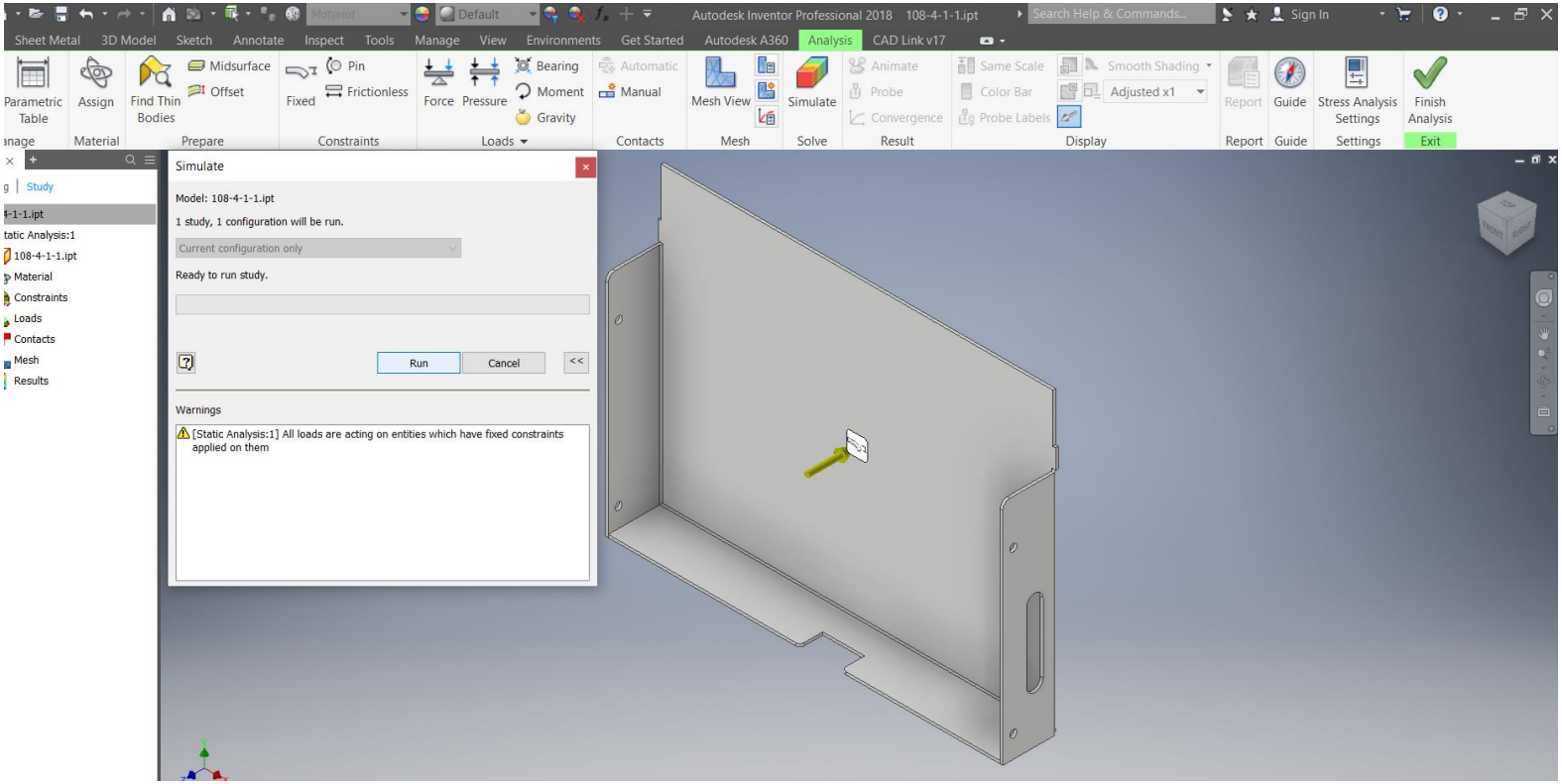

Steps for finite element calculation

4. Generate the report

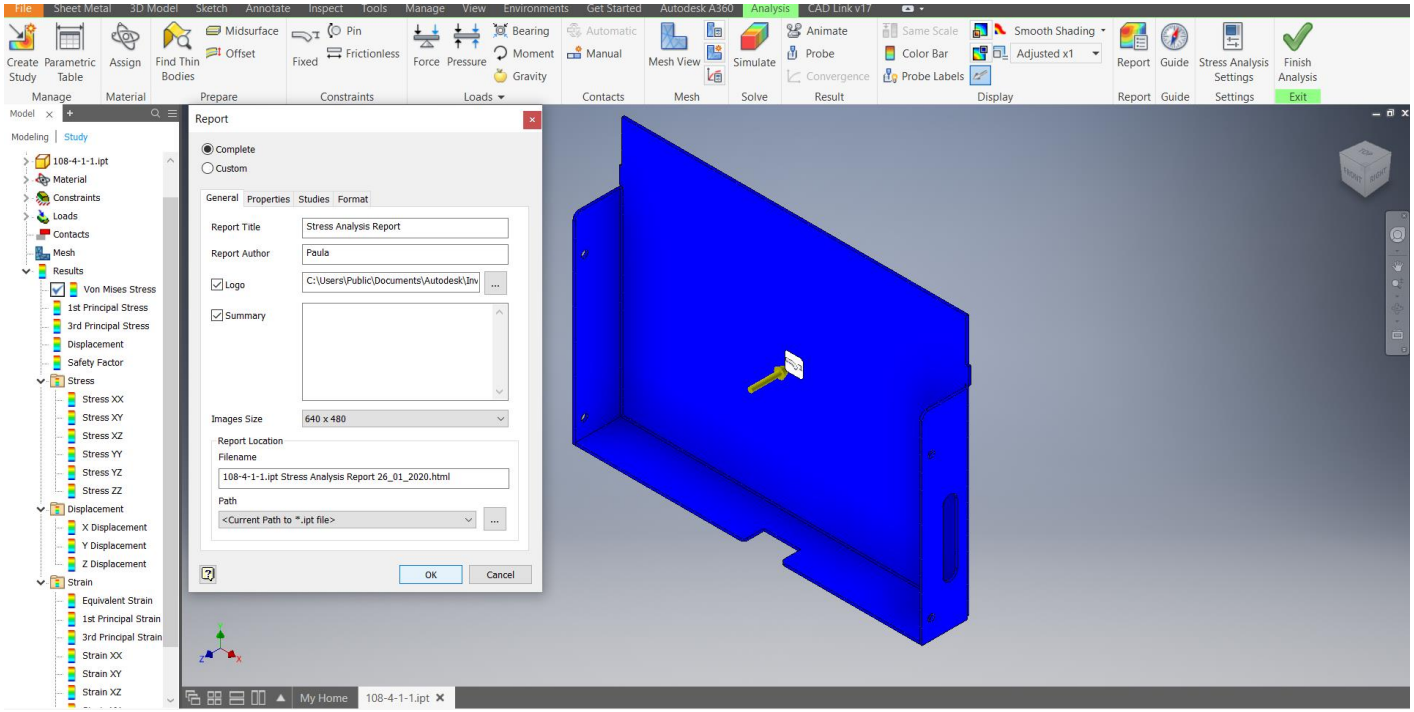

Steps for finite element calculation

5. Report

Image Width (pixels): 320 | 400 | 640 | 800 | 1024 | 1280 | Fit Width | Original

Stress Analysis Report

Analyzed File:	108-4-1-1.ipt
Autodesk Inventor Version:	2018 (Build 220112000, 112)
Creation Date:	26/01/2020, 15:21
Study Author:	Paula
Summary:	

Project Info (iProperties)

Summary

Title	E:/Tests/Unfolder/108-4-1-1.stp
Author	
Company	

Project

Part Number	108-4-1-1
Description	STEP AP203
Revision Number	NONE
Designer	Paula
Authority	
Cost	£0.00
Date Created	08/03/2006

Status

Design Status	WorkInProgress

Static Analysis:1

General objective and settings:

Design Objective	Single Point
Study Type	Static Analysis
Last Modification Date	26/01/2020, 15:15
Detect and Eliminate Rigid Body Modes	No

Mesh settings:

Avg. Element Size (fraction of model diameter)	0.1
Min. Element Size (fraction of avg. size)	0.2
Grading Factor	1.5
Max. Turn Angle	60 deg
Create Curved Mesh Elements	Yes

Material(s)

Name	Stainless Steel, 440C	
General	Mass Density	0.279986 lbmass/in^3
	Yield Strength	99931 psi
	Ultimate Tensile Strength	124914 psi
Stress	Young's Modulus	29979.3 ksi
	Poisson's Ratio	0.27 ul
	Shear Modulus	11802.9 ksi
Part Name(s)	108-4-1-1.ipt	

4. Finite element analysis software

Autodesk, Inc.

https://www.autodesk.com/

AUTOCAD

https://www.autodesk.com/products/autocad/free-trial

INVENTOR

https://www.autodesk.com/products/inventor/free-trial

MOLDFLOW

https://www.autodesk.com/products/moldflow/free-trial

FUSION 360

https://www.autodesk.com/products/fusion-360/free-trial

INVENTOR NASTRAN

https://www.autodesk.com/products/inventor-nastran/overview

ANSYS

ANSYS, Inc. https://www.ansys.com/products/structures

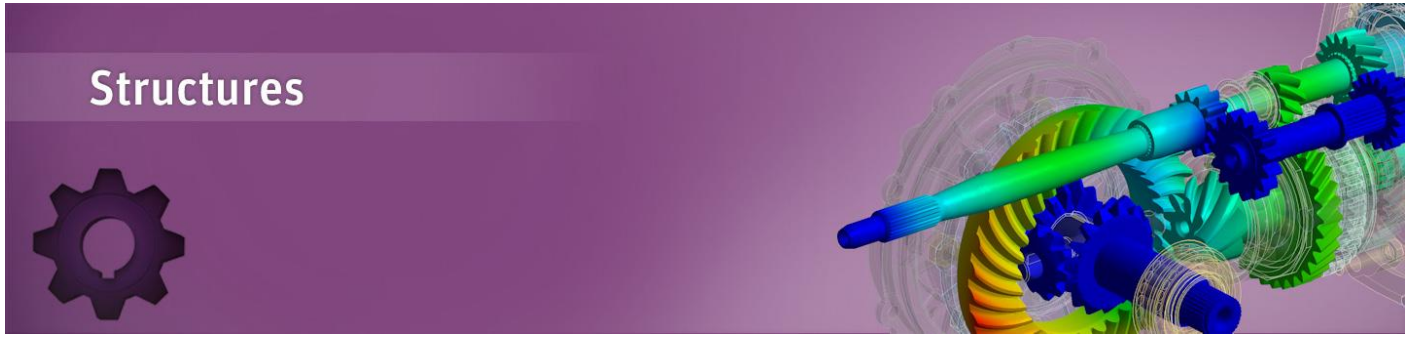

- ANSYS is a Finite Element Modelling Package for numerically solving a variety of mechanical problems: static and dynamic structural analysis (both linear and non linear), steady state and transient heat transfer problems, mode-frequency and buckling analyses, acoustic and electromagnetic problems and various types of field and coupled-field applications.
- The program contains many special features which allow nonlinearities or secondary effects to be included in the solution such as plasticity, large strain, hyper elasticity, creep, swelling, large deflections, contact, stress stiffening, temperature dependency, material anisotropy and radiation.

MSC CO-SIMULATION

- MSC Software Corporation
  https://www.mscsoftware.com/product/co-simulation

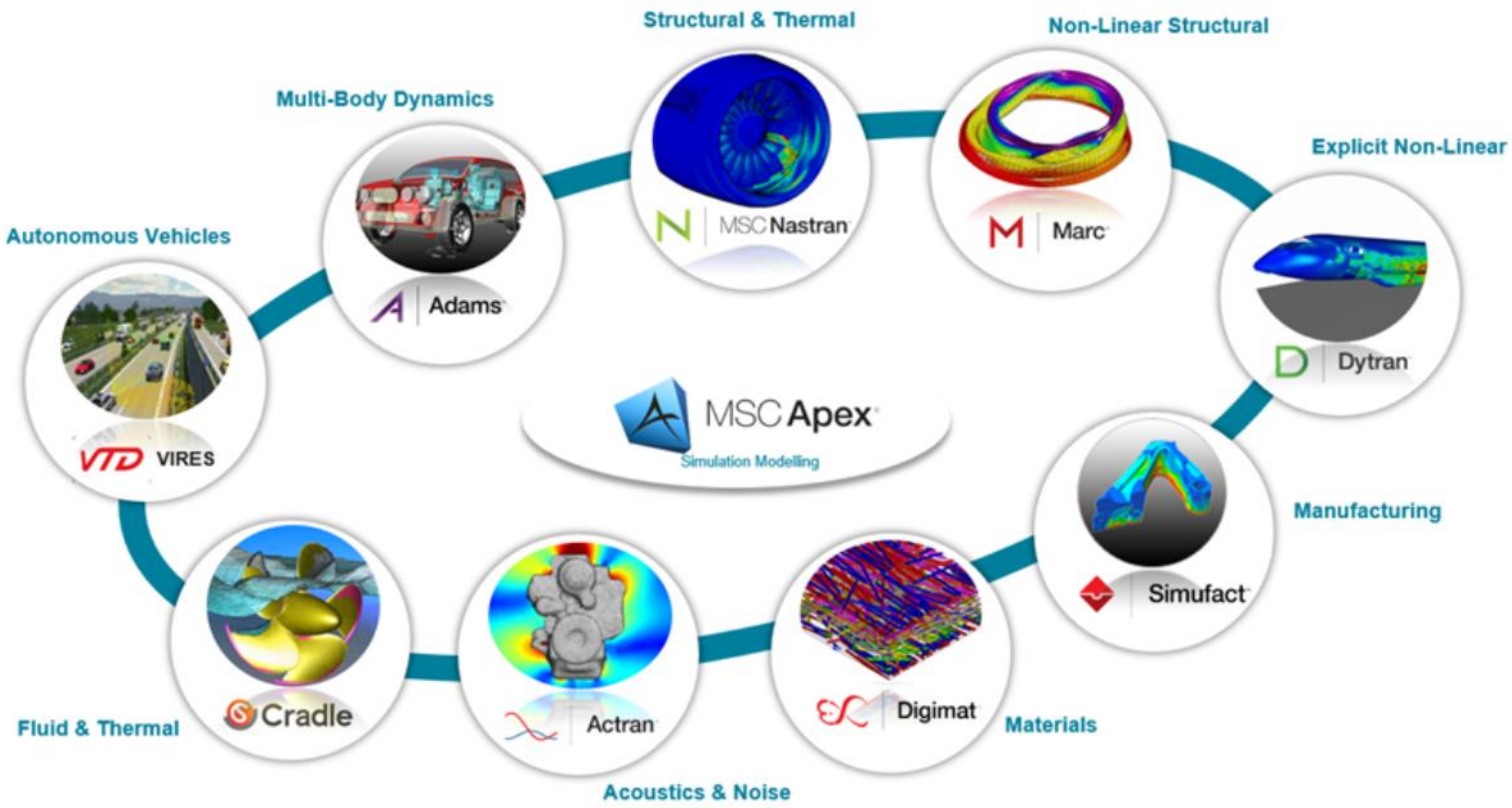

COMSOL Multiphysics® FEA software

COMSOL, Inc.

https://www.comsol.com/

The *Solid Mechanics* interfaces, available in 3D; 2D (plane stress, plane strain, and generalized plane strain); and 2D axial symmetry, provide the most general approach to analyzing solid structures. By using a geometrically nonlinear formulation, it can analyze situations with arbitrarily large rotations and strains.

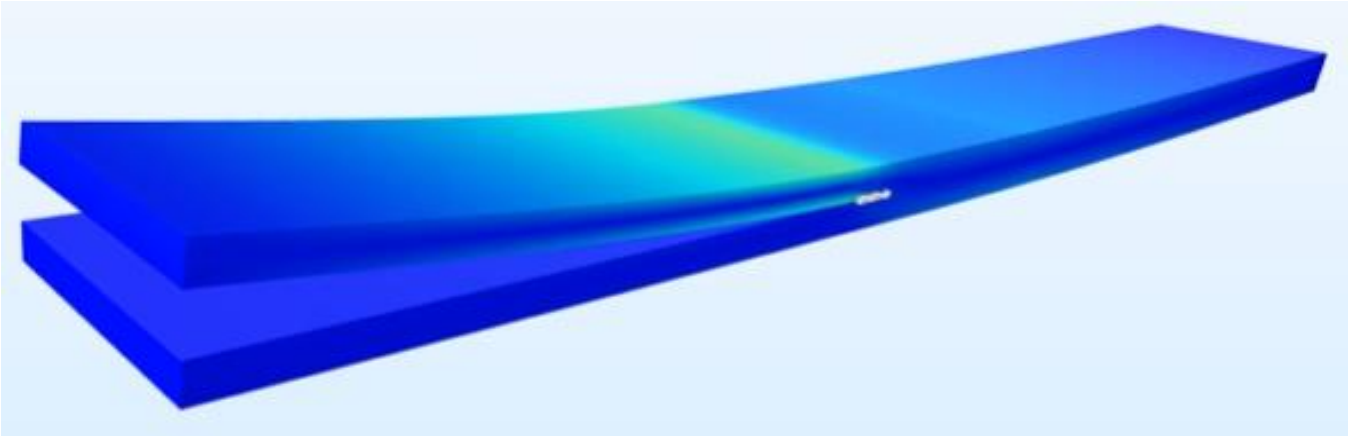

5. Correlation

Correlation analysis quantitatively and qualitatively compares 2 sets of analysis results data. Usually this is a FEA and a test database that are imported in the FEM tools database [17].

- **Spatial correlation** - Compares location in space between response locations resulting in a table with mapped degrees-of-freedom. This may require changing orientation and scaling of the models, which can be done in a manual way or using automatic tools.
- **Visual shape correlation** - Visually compare shapes (static displacement shapes, mode shapes and operational shapes) using side-by-side, overly and animated displays.
- **Global shape correlation** - Globally compares shapes using various criteria. The result is used for shape pairing.
- **Local shape correlation** - analyzes local spatial correlation between shapes. Results can be interpreted to localize modeling deficiencies and serve as guideline for selecting model updating parameters.
- **Shape pairing** - Creates a table of shape pairs (static, modal or operational).
- **FRF pairing** - Creates a table of FRF pairs.
- **FRF correlation** - Analyzes correlation between FRF functions, either globally between 2 functions or shape and amplitude correlation functions for a set of FRF pairs as function of frequency.
- **Correlation coefficients** - Calculates values of error functions from a selection of reference responses. These functions are used in model updating to monitor the distance between the updated model and a reference.

Optimization

FEM tools Optimization is a toolbox for solving general and structural design optimization problems [18].

FEM tools Optimization contains functions for:

- **Sensitivity Analysis** - Analyses how changes of parameters influences the structural responses.
- **General Non-Linear Optimization** - For solving arbitrary non-linear optimization problems.
- **Size Optimization** - For optimizing component parameters such as cross-section and thickness.
- **Shape Optimization** - For optimizing the shape of existing components.
- **Topometry Optimization** - Optimizing component parameters on an element-by-element basis.
- **Topology Optimization** - Creating new designs with a layout optimized for a given load.
- **Design of Experiments and Response Surface Modeling** - Efficient sampling of the design space and create an approximate model.

Exercises for finite element calculation

Upload the part

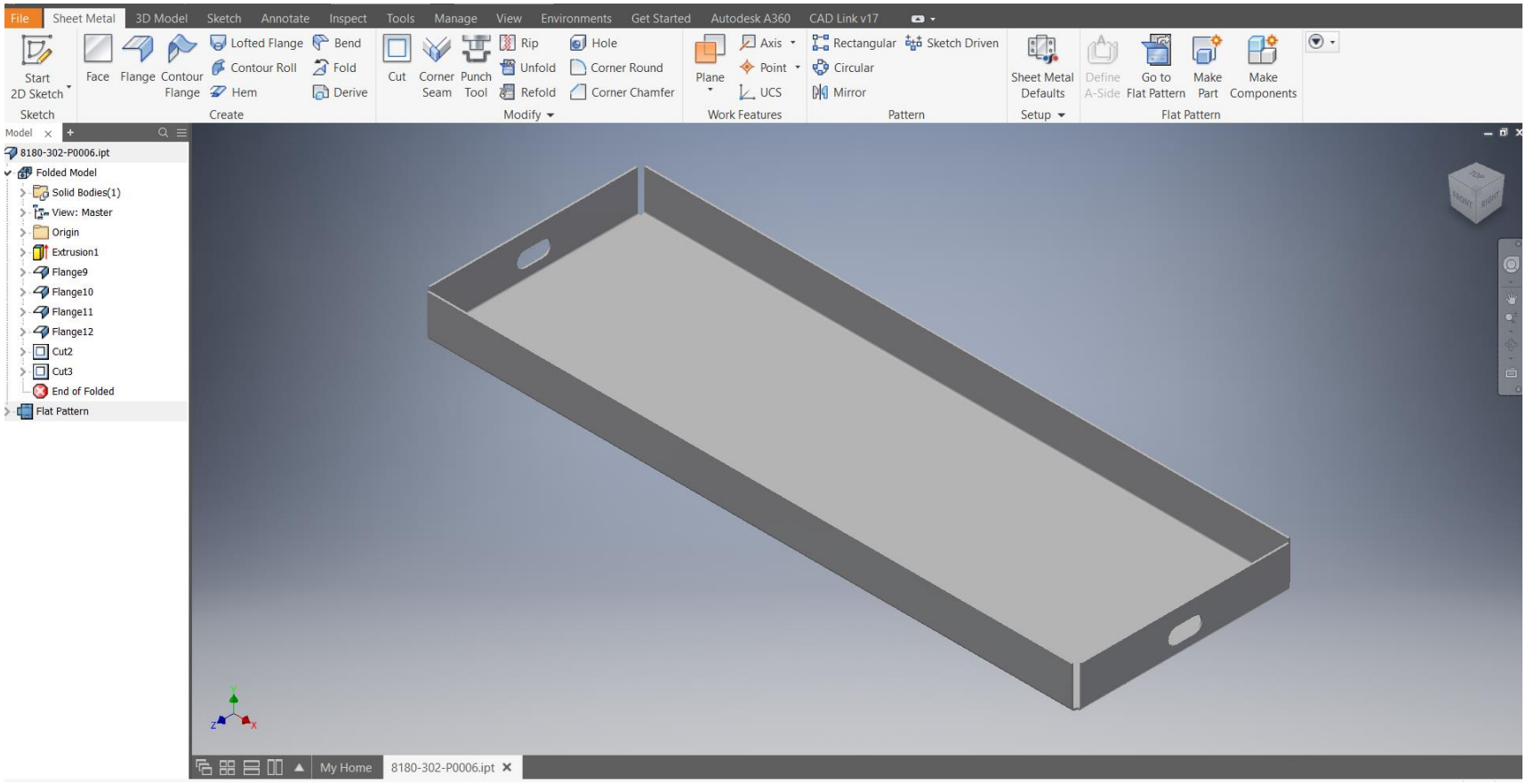

Create the simulation

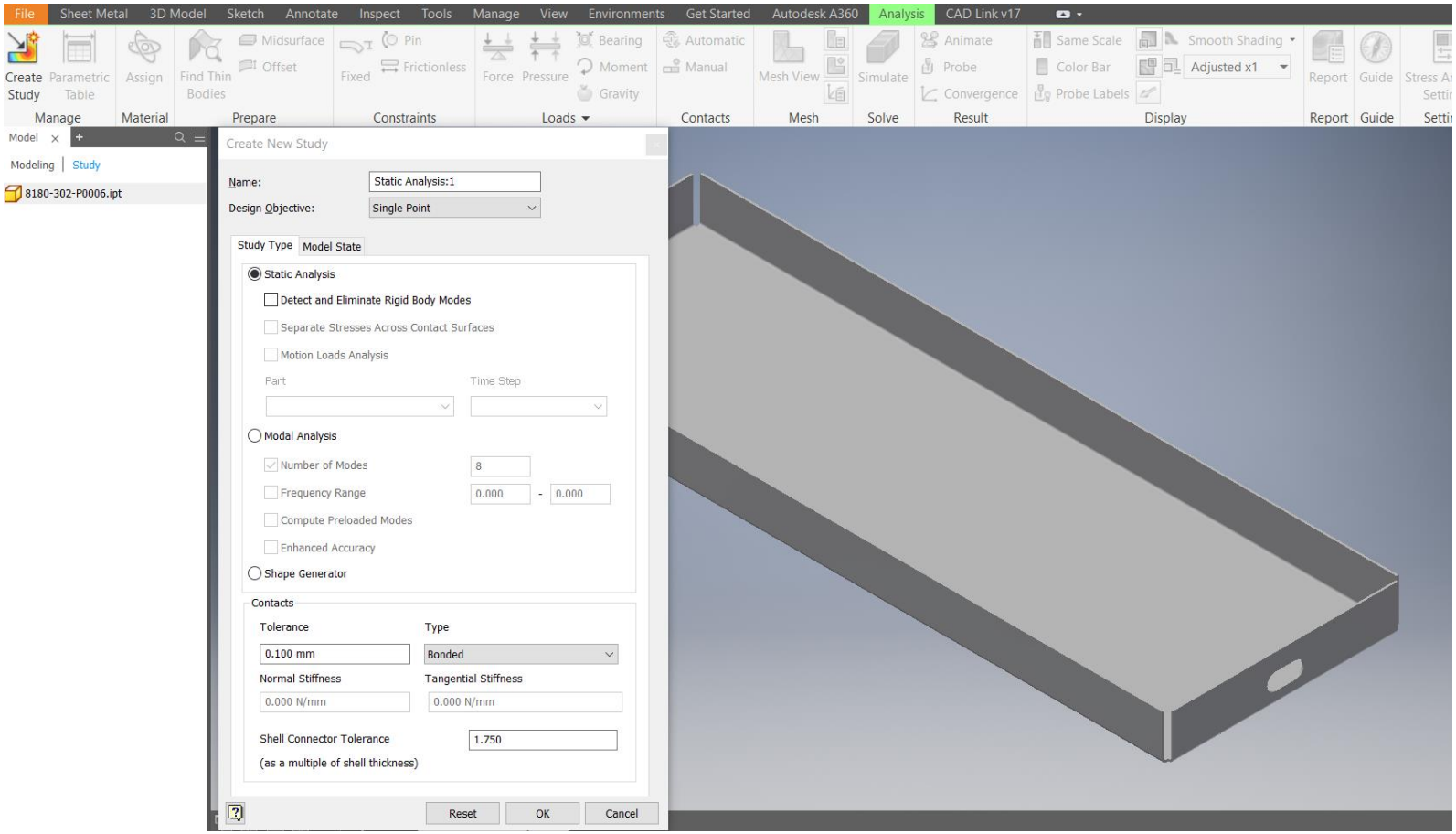

Loads

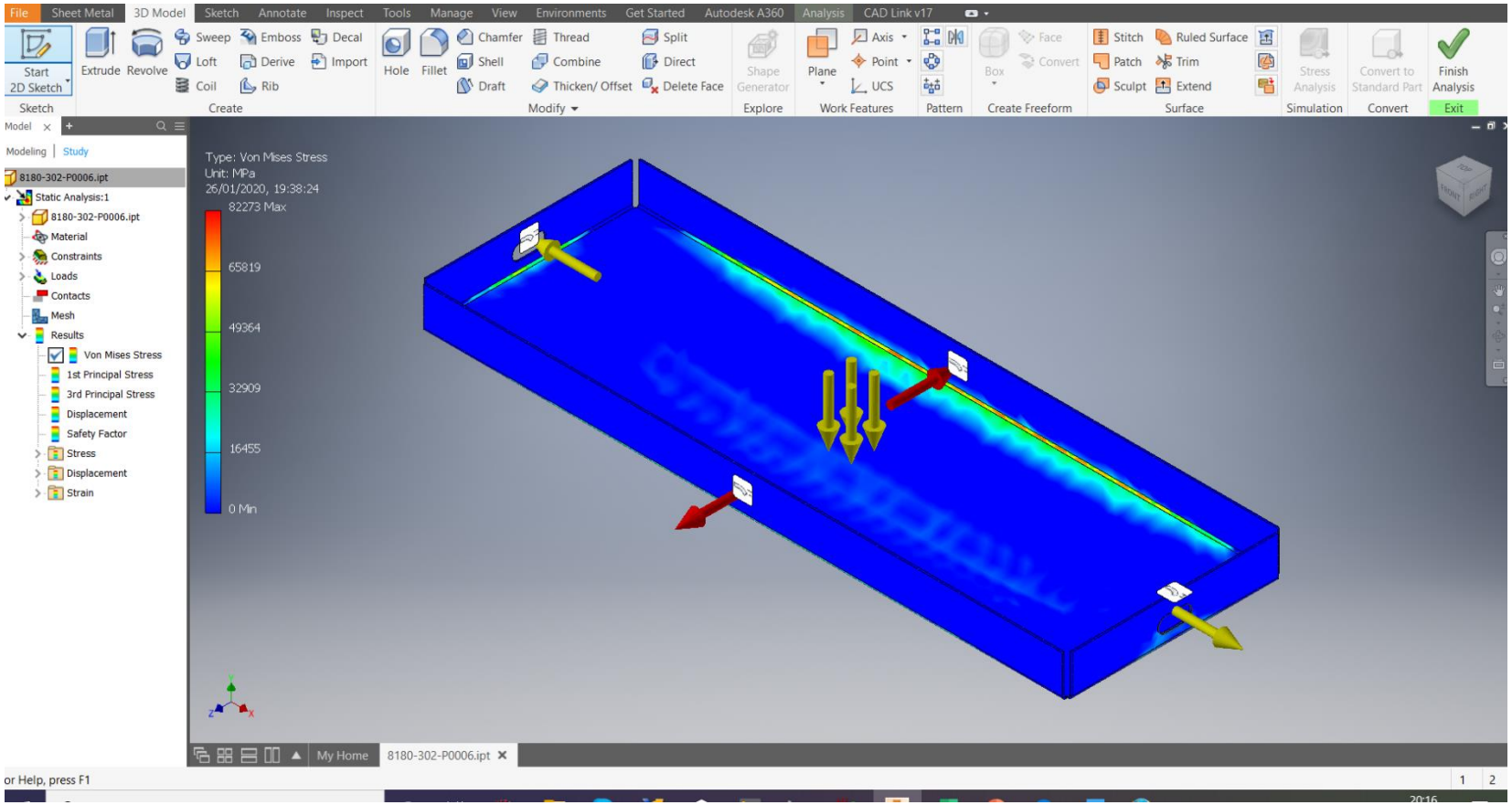
File
Sheet Metal
3D Model
Sketch
Annotate
Inspect
Tools
Manage
View
Environments
Get Started
Autodesk A360
Analysis
CAD Link v17
Start 2D Sketch
Extrude
Revolve
Sweep
Loft
Coil
Emboss
Derive
Rib
Decal
Import
Hole
Fillet
Chamfer
Shell
Draft
Thread
Combine
Thicken/ Offset
Split
Direct
Delete Face
Shape Generator
Plane
Axis
Point
UCS
Box
Face
Convert
Stitch
Patch
Sculpt
Ruled Surface
Trim
Extend
Stress Analysis
Convert to Standard Part
Finish Analysis
Sketch
Create
Modify
Explore
Work Features
Pattern
Create Freeform
Surface
Simulation
Convert
Exit
Model
Modeling
Study
8180-302-P0006.ipt
Static Analysis:1
8180-302-P0006.ipt
Material
Constraints
Loads
Contacts
Mesh
Results
Von Mises Stress
1st Principal Stress
3rd Principal Stress
Displacement
Safety Factor
Stress
Displacement
Strain
Type: Von Mises Stress
Unit: MPa
26/01/2020, 19:38:24
82273 Max
65819
49364
32909
16455
0 Min
My Home
8180-302-P0006.ipt
or Help, press F1

Exercises – Generate the report

Physical

Material	Steel, Mild
Density	7.85 g/cm^3
Mass	0.804099 kg
Area	172434 mm^2
Volume	102433 mm^3
Center of Gravity	x=0 mm y=4.99822 mm z=0 mm

Note: Physical values could be different from Physical values used by FEA reported below.

Static Analysis:1

General objective and settings:

Design Objective	Single Point
Study Type	Static Analysis
Last Modification Date	26/01/2020, 19:38
Detect and Eliminate Rigid Body Modes	No

Mesh settings:

Avg. Element Size (fraction of model diameter)	0.1
Min. Element Size (fraction of avg. size)	0.2
Grading Factor	1.5
Max. Turn Angle	60 deg
Create Curved Mesh Elements	Yes

Material(s)

Name	Steel, Mild	
General	Mass Density	7.85 g/cm^3
	Yield Strength	207 MPa
	Ultimate Tensile Strength	345 MPa
Stress	Young's Modulus	220 GPa
	Poisson's Ratio	0.275 ul
	Shear Modulus	86.2745 GPa
Part Name(s)	8180-302-P0006.ipt	

Operating conditions

Force:1

Load Type	Force
Magnitude	50.000 N
Vector X	-50.000 N
Vector Y	-0.000 N
Vector Z	0.000 N

Reaction Force and Moment on Constraints

Constraint Name	Reaction Force		Reaction Moment	
	Magnitude	Component (X,Y,Z)	Magnitude	Component (X,Y,Z)
Fixed Constraint:1	558620 N	0 N	14350.7 N m	0 N m
		558620 N		0 N m
		0 N		14350.7 N m

Result Summary

Name	Minimum	Maximum
Volume	102433 mm^3	
Mass	0.804099 kg	
Von Mises Stress	0.177403 MPa	82273.3 MPa
1st Principal Stress	-13035.7 MPa	89040.9 MPa
3rd Principal Stress	-55124.6 MPa	13954.1 MPa
Displacement	0 mm	284.306 mm
Safety Factor	0.00251601 ul	15 ul
Stress XX	-29779.8 MPa	47166.3 MPa
Stress XY	-35072.7 MPa	24715.3 MPa
Stress XZ	-10479.9 MPa	10775.3 MPa
Stress YY	-42125.4 MPa	63469.8 MPa
Stress YZ	-44211.1 MPa	46088.4 MPa
Stress ZZ	-49769.1 MPa	77226.5 MPa
X Displacement	-10.7613 mm	2.07592 mm
Y Displacement	-284.306 mm	1.02251 mm
Z Displacement	-4.29886 mm	4.2763 mm
Equivalent Strain	0.000000704015 ul	0.334825 ul
1st Principal Strain	-0.00752167 ul	0.379675 ul
3rd Principal Strain	-0.229712 ul	0.00436758 ul
Strain XX	-0.12328 ul	0.187292 ul
Strain XY	-0.203263 ul	0.143237 ul
Strain XZ	-0.0607358 ul	0.0624476 ul
Strain YY	-0.154375 ul	0.238996 ul
Strain YZ	-0.256223 ul	0.267103 ul

3rd Principal Stress

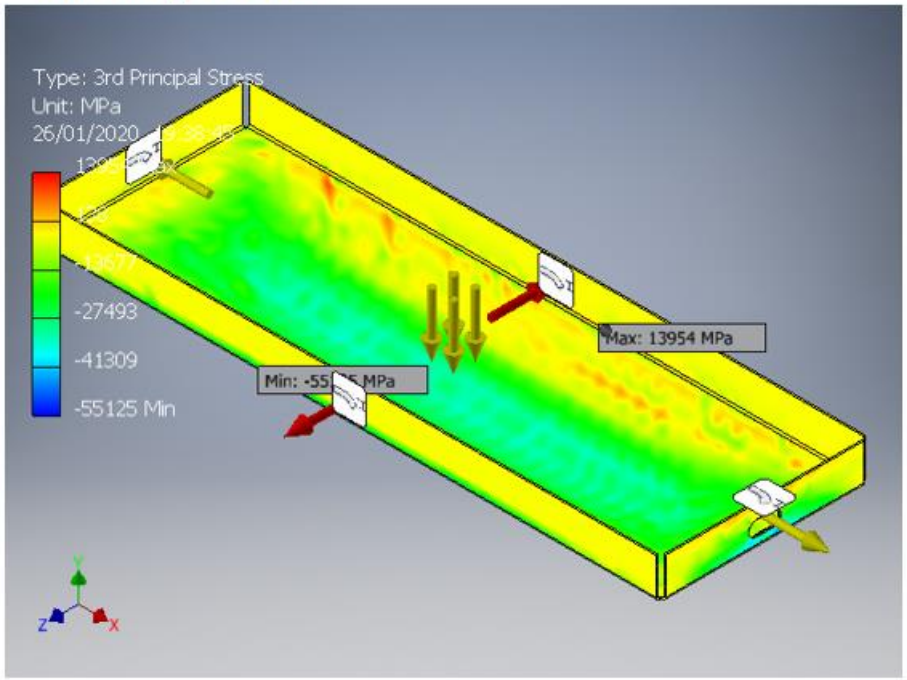

Strength of materials

Displacement

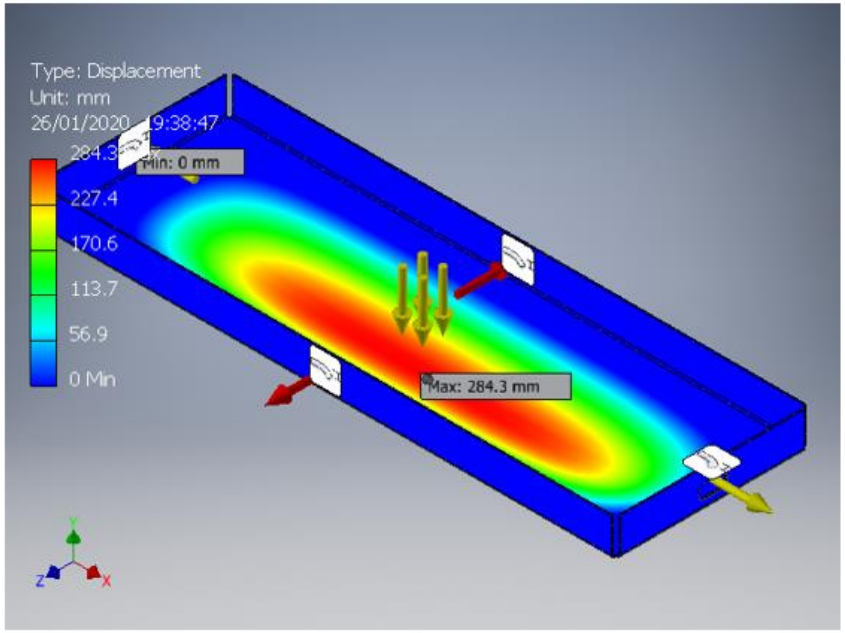

Safety Factor

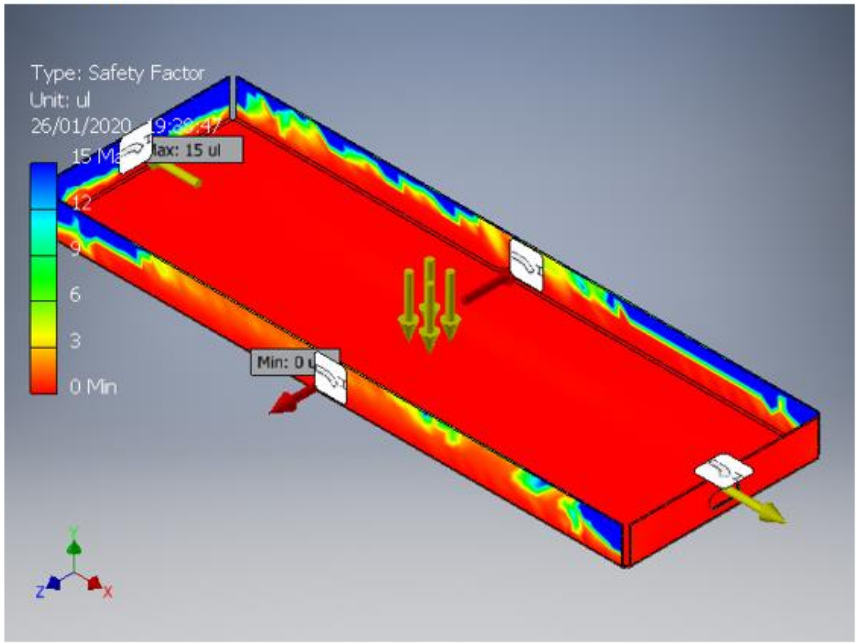

Stress XX

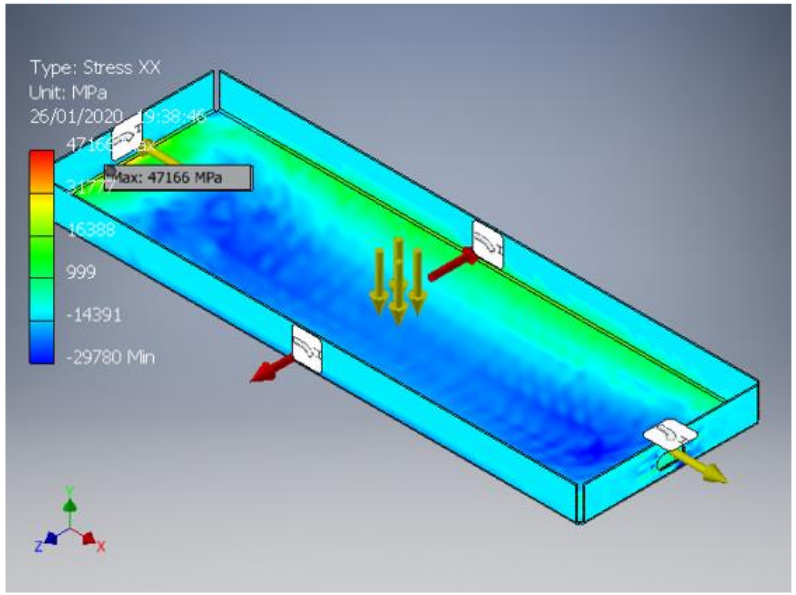

Y Displacement

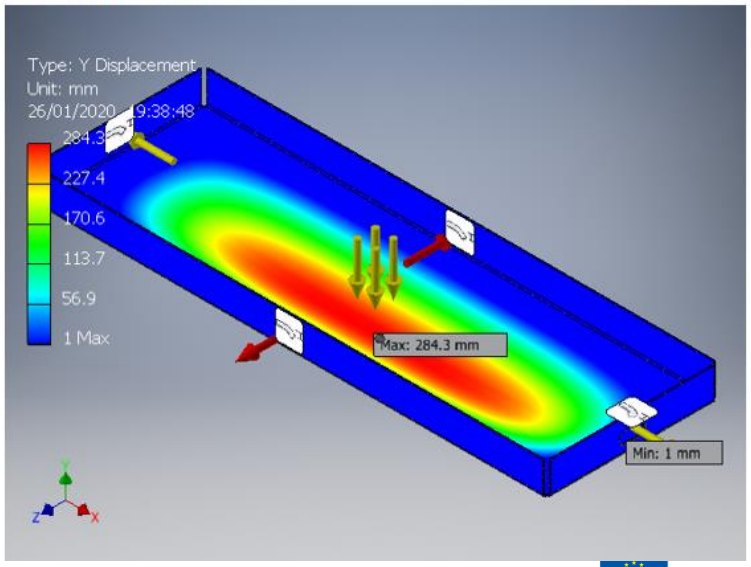

Exercises [7]

Normal Stresses

A hollow steel tube with an inside diameter of 100 mm must carry a tensile load of 400 kN. Determine the outside diameter of the tube if the stress is limited to 120 MN/m^2.

$$P = \sigma A$$

where:

$$P = 400\,\text{kN} = 400\,000\text{N}$$

$$\sigma = 120\,\text{MPa}$$

$$A = \tfrac{1}{4}\pi D^2 - \tfrac{1}{4}\pi(100^2)$$

$$A = \tfrac{1}{4}\pi(D^2 - 10\,000)$$

$$400\,000 = 120\,[\,\tfrac{1}{4}\pi(D^2 - 10\,000)\,]$$

$$400\,000 = 30\pi D^2 - 300\,000\pi$$

$$D^2 = \frac{400\,000 + 300\,000\pi}{30\pi}$$

$$D = 119.35\ \text{mm} \qquad \textit{answer}$$

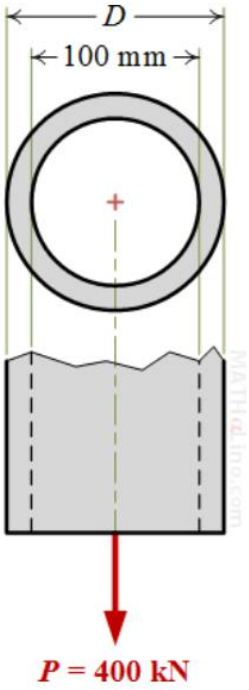

Exercises [7]

Shear Stress

What force is required to punch a 20-mm-diameter hole in a plate that is 25 mm thick? The shear strength is 350 MN/m^2.

$$V = \tau A$$

$$P = 350\,[\,\pi(20)(25)\,]$$

$$P = 549\,778.7\,\mathrm{N}$$

$$P = 549.8\,\mathrm{kN} \qquad \textit{answer}$$

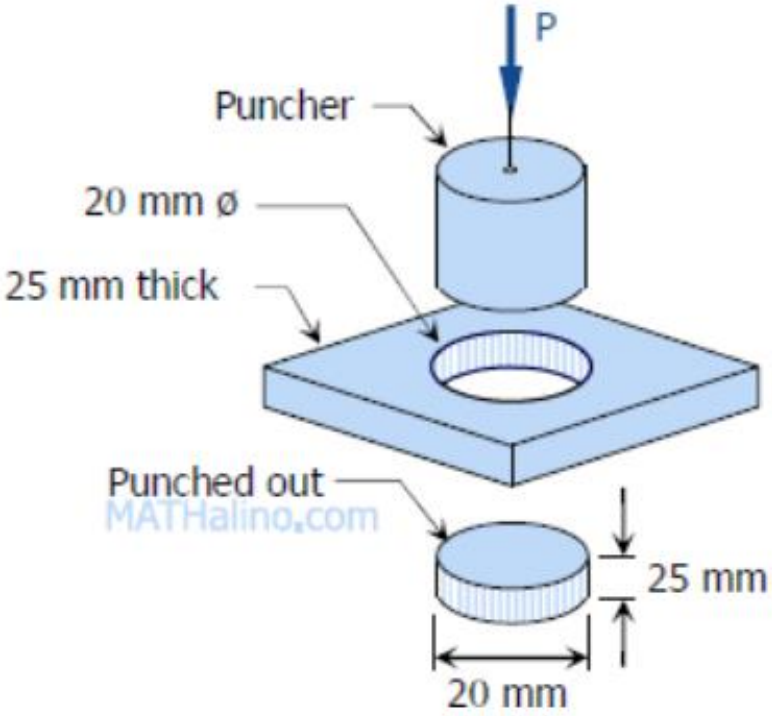

Exercises [7]

Deflection

For the beam shown in Fig. P-673, show that the midspan deflection is δ = (Pb/48EI) ($3L^2$ - $4b^2$).

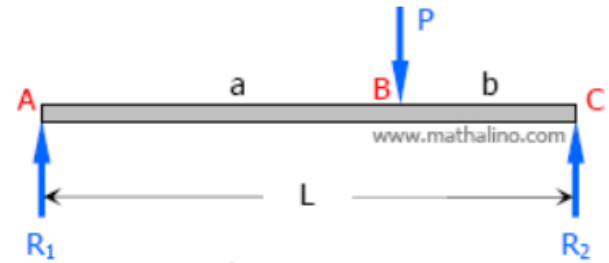

Figure P-673

$$EI\,t_{A/M} = (Area_{AM})\,\bar{X}_A$$

$$EI\,t_{A/M} = \tfrac{1}{2}(\tfrac{1}{2}L)(\tfrac{1}{2}PL)[\tfrac{2}{3}(\tfrac{1}{2}L)] - \tfrac{1}{2}(\tfrac{1}{2}L - b)P(\tfrac{1}{2}L - b)[b + \tfrac{2}{3}(\tfrac{1}{2}L - b)]$$

$$EI\,t_{A/M} = \tfrac{1}{24}PL^3 - \tfrac{1}{2}Pb(\tfrac{1}{2}L - b)^2 - \tfrac{1}{3}P(\tfrac{1}{2}L - b)^3$$

$$EI\,t_{A/M} = \tfrac{1}{24}PL^3 - \tfrac{1}{2}Pb\left(\frac{L-2b}{2}\right)^2 - \tfrac{1}{3}P\left(\frac{L-2b}{2}\right)^3$$

$$EI\,t_{A/M} = \tfrac{1}{24}PL^3 - \tfrac{1}{8}Pb(L-2b)^2 - \tfrac{1}{24}P(L-2b)^3$$

$$EI\,t_{A/M} = \tfrac{1}{24}PL^3 - \tfrac{1}{8}Pb(L^2 - 4Lb + 4b^2) - \tfrac{1}{24}P(L^3 - 6L^2b + 12Lb^2 - 8b^3)$$

$$EI\,t_{A/M} = \tfrac{1}{24}PL^3 - \tfrac{1}{8}PL^2b + \tfrac{1}{2}PLb^2 - \tfrac{1}{2}Pb^3 - \tfrac{1}{24}PL^3 + \tfrac{1}{4}PL^2b - \tfrac{1}{2}PLb^2 + \tfrac{1}{3}$$

$$EI\,t_{A/M} = \tfrac{1}{8}PL^2b - \tfrac{1}{6}Pb^3$$

$$EI\,t_{A/M} = \tfrac{1}{24}Pb(3L^2 - 4b^2)$$

$$t_{A/M} = \frac{Pb}{24EI}(3L^2 - 4b^2)$$

$$\delta_{midspan} = \tfrac{1}{2}t_{A/M}$$

$$\delta_{midspan} = \frac{Pb}{48EI}(3L^2 - 4b^2) \qquad (okay!)$$

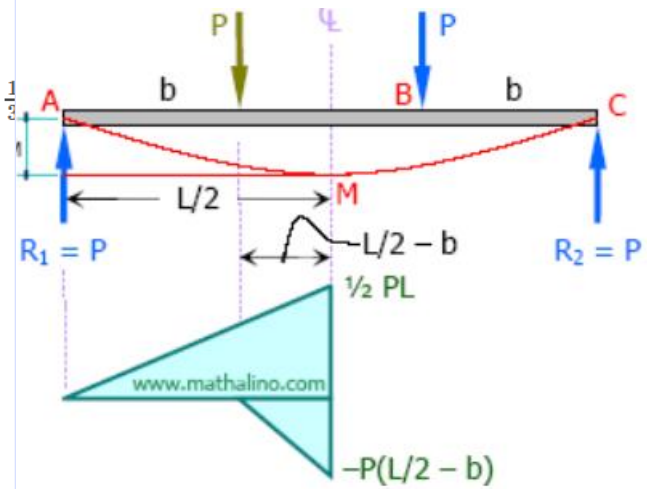

Exercises [7]

Continuous Beam by Three-Moment Equation

Determine the moment over the support R_2 of the beam shown in Fig. P-813.

$$M_1L_1 + 2M_2(L_1 + L_2) + M_3L_2 + \frac{6A_1\bar{a}_1}{L_1} + \frac{6A_2\bar{b}_2}{L_2} = 0$$

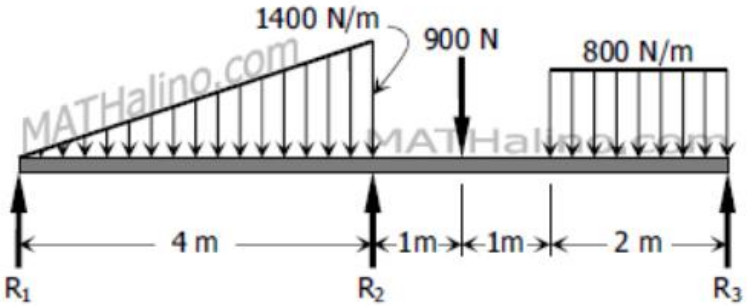

Figure P-813

Where

$M_1 = M_3 = 0$

$L_1 = L_2 = 4\ \text{m}$

$$\frac{6A_1\bar{a}_1}{L_1} = \frac{8w_oL^3}{60} = \frac{8(1400)(4^3)}{60}$$

$$\frac{6A_1\bar{a}_1}{L_1} = 11\,946.67\ \text{N}\cdot\text{m}^2$$

$$\frac{6A_2\bar{b}_2}{L_2} = \frac{Pb}{L}(L^2 - b^2) + \frac{w_od^2}{4L}(2L^2 - d^2)$$

$$\frac{6A_2\bar{b}_2}{L_2} = \frac{900(3)}{4}(4^2 - 3^2) + \frac{800(2^2)}{4(4)}[2(4^2) - 2^2]$$

$$\frac{6A_2\bar{b}_2}{L_2} = 10\,325\ \text{N}\cdot\text{m}^2$$

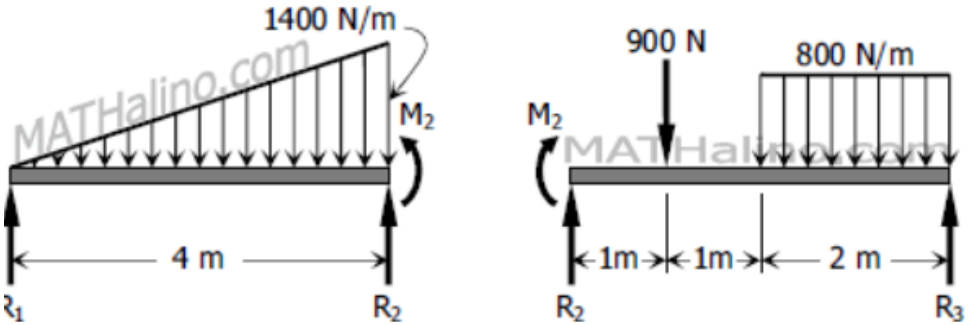

Thus,

$0 + 2M_2(4 + 4) + 0 + 11\,946.67 + 10\,325$

$M_2 = -1391.98\ \text{N}\cdot\text{m}$ *answer*

Exercises [7]

Combined Axial and Bending

A cast iron link is 40 mm wide by 200 mm high by 500 mm long. The allowable stresses are 40 MPa in tension and 80 MPa in compression. Compute the largest compressive load P that can be applied to the ends of the link along a longitudinal axis that is located 150 mm above the bottom of the link.

Original Loading

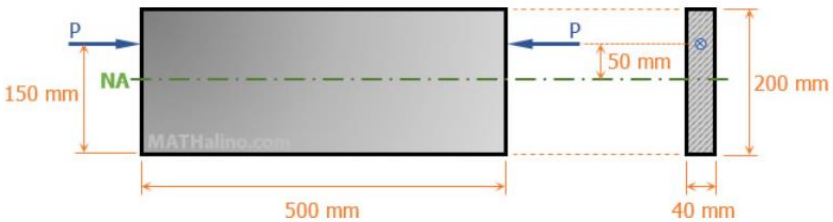

$M = 50P \text{ N} \cdot \text{mm}$

Equivalent Loading

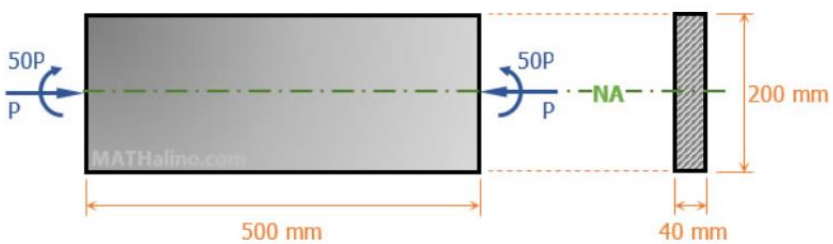

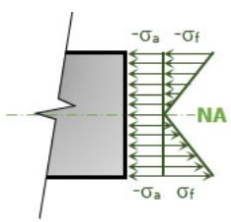

Top fiber (σ = 80 MPa compression)

$$\sigma_{top} = -\sigma_a - \sigma_f$$

$$\sigma_{top} = -\frac{P}{A} - \frac{6M}{bd^2}$$

$$-80 = -\frac{P}{40(200)} - \frac{6(50P)}{40(200d^2)}$$

$$-80 = -\frac{P}{3,200}$$

$$P = 256,000 \text{ N} = 256 \text{ kN}$$

Check the bottom fiber

$$\sigma_{bottom} = -\sigma_a + \sigma_f$$

$$\sigma_{bottom} = -\frac{P}{A} + \frac{6M}{bd^2}$$

$$\sigma_{bottom} = -\frac{256(1000)}{40(200)} + \frac{6(50 \times 256)(1000)}{40(200^2)}$$

$$\sigma_{bottom} = 16 \text{ MPa tension} < 40 \text{ MPa} \quad (okay)$$

Thus,

$P = 256 \text{ kN} \quad answer$

Erasmus+

References

1. Paulina SPÂNU, Gabriel JIGA, Mihai RĂDULESCU, *LabVIEW Application for the Strength Calculus of an Unhomogeneous Beam,* 29th International Business Information Management Association Conference, pag. 4024-4034, ISBN: 978-0-9860419-7-6, 2017

2. https://en.wikipedia.org/wiki/Strength_of_materials.

3. https://www.fictiv.com/hwg/design/engineering-fundamentals-refresh-strength-vs-stiffness-vs-hardness

4. https://mechanicalc.com/reference/strength-of-materialsPaulina SPÂNU**,** Cătălin Gheorghe AMZA, Bogdan ABAZA, *Study Redarding the Compressive Properties of Glass Fiber Reinforced Composites,* Revista MATERIALE PLASTICE, vol. 55, nr. 4/2018

5. Paulina SPÂNU**,** Cătălin Gheorghe AMZA, Gabriela DINU, *Statistical Analysis of Some Mechanical Characteristics of Glass Fiber Reinforced Composites,* Revista MATERIALE PLASTICE, vol. 54, nr. 4/2017

6. https://nptel.ac.in/courses/112107146/

7. https://www.mathalino.com/reviewer/mechanics-and-strength-of-materials/normal-stresses

8. https://en.wikipedia.org/wiki/Cauchy_stress_tensor

9. https://wp.optics.arizona.edu/optomech/wp-content/uploads/sites/53/2016/10/OPTI_222_W21.pdf

10. https://en.wikipedia.org/wiki/Stress_measures#Kirchhoff_stress

11. https://en.wikipedia.org/wiki/Yield_surface

12. https://www.simscale.com/blog/2016/10/what-is-finite-element-method/

13. https://www.simscale.com/simulations/

14. Nicolae Faur, *Elementary Finite Element*, Publish house: ``Politehnica`` Timisoara, 2008

15. http://e-bahan2.blogspot.com/2011/07/intergration-of-load-equation.html

References

16. https://www.open.edu/openlearn/science-maths-technology/introduction-finite-element-analysis/content-section-0?active-tab=content-tab

17. https://asrengineering.com/2019/05/09/what-is-finite-element-analysis-fea/

18. https://www.femtools.com/products/ftopt.htm