Advanced Processing Technology (40 h)

UPenAUTO : 2017-1-ES01-KA203-03858

Erasmus+

UPenAUTO: UPSKILLED ENGINEERING PROFILES FOR THE AUTOMOTIVE SECTOR AND UPTAKE OF ALTERNATE SCHEME IN EUROPE´S HIGHER EDUCATION.

Gestamp

GTI
GESTAMP TECHNOLOGY INSTITUTE

FABRIKAZIOAREN ZENTRO AURRERATUA
CENTRO AVANZADO DE FABRICACIÓN

somorrostro
centro de formación / irakas-gunea

UNIVERSITATEA POLITEHNICA

PRESENT AND FUTURE

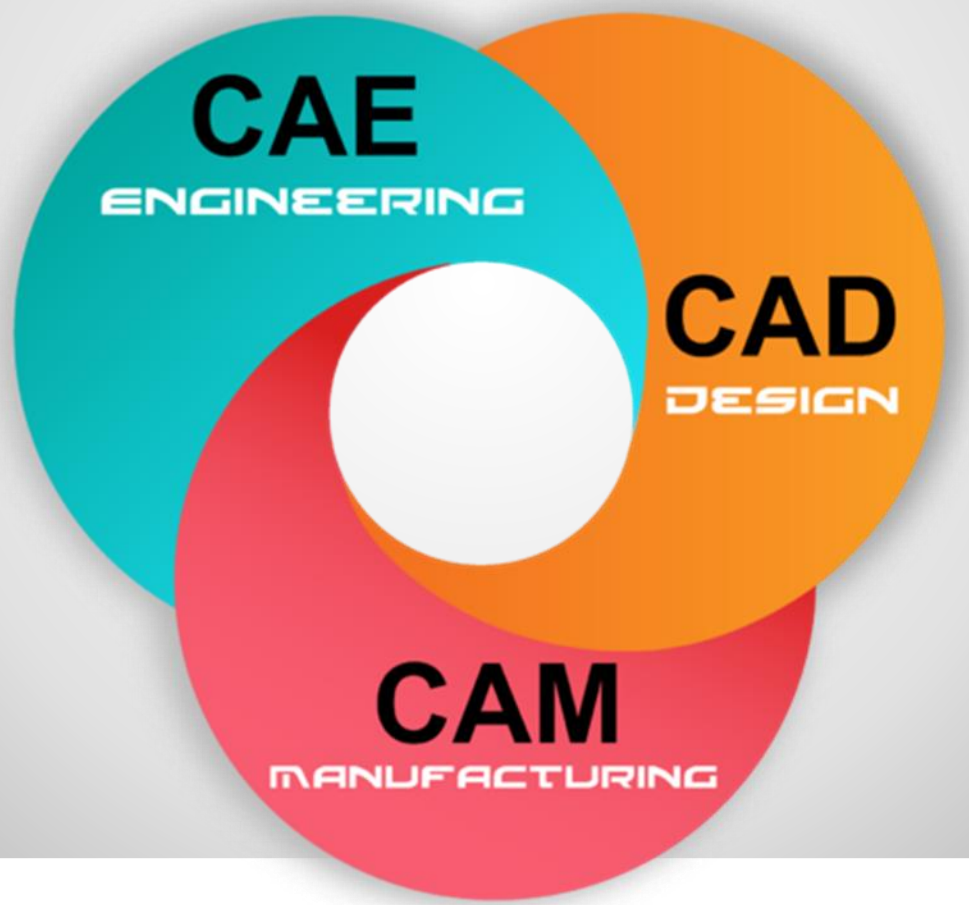

- CAD (Computer Aided Design)

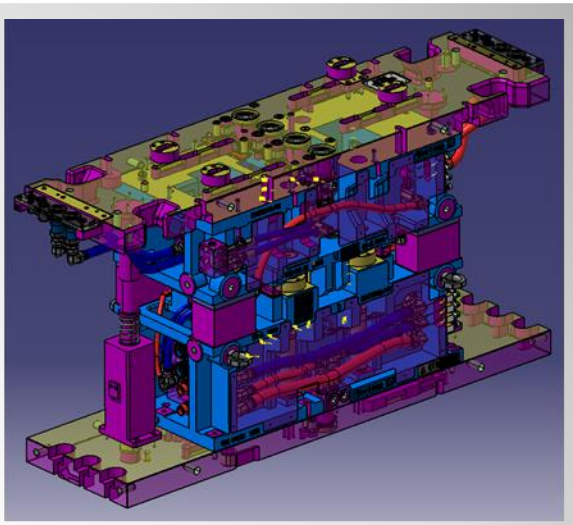

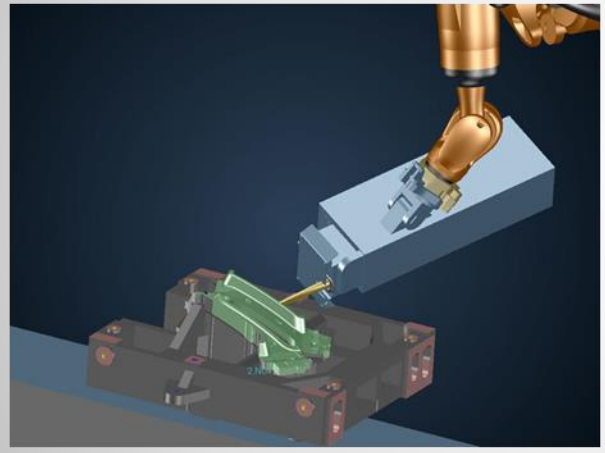

- CAM (Computer Aided Manufacturing)

- CAE (Computer Aided Engineering)

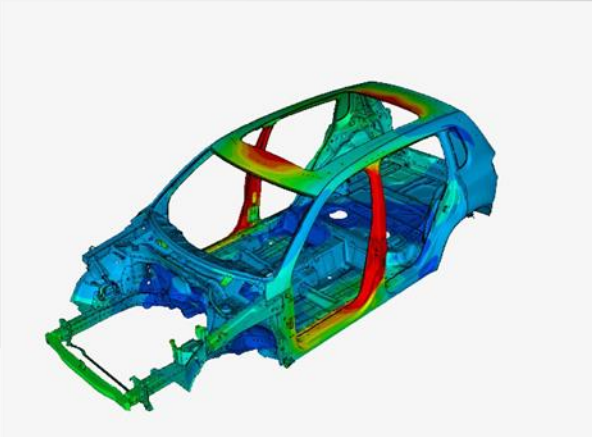

- Informatic tool in order to carry out design processes (draws in 2D and models in 3D)

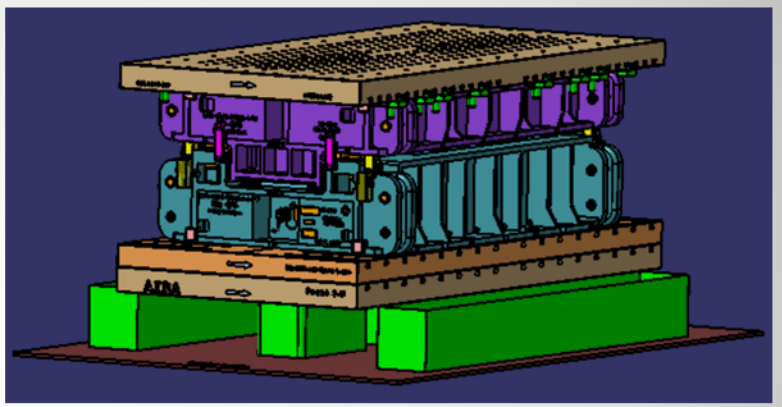

- Advantages:
  - Increases the productivity of the designer.
  - Improves the documentation and quality of the design.
  - Creates database of manufacturing.

CAD

- CATIA
- NX
- INVENTOR
- AUTOCAD
- SOLIDWORKS
- SOLID EDGE
- CREO
- RHINO3D

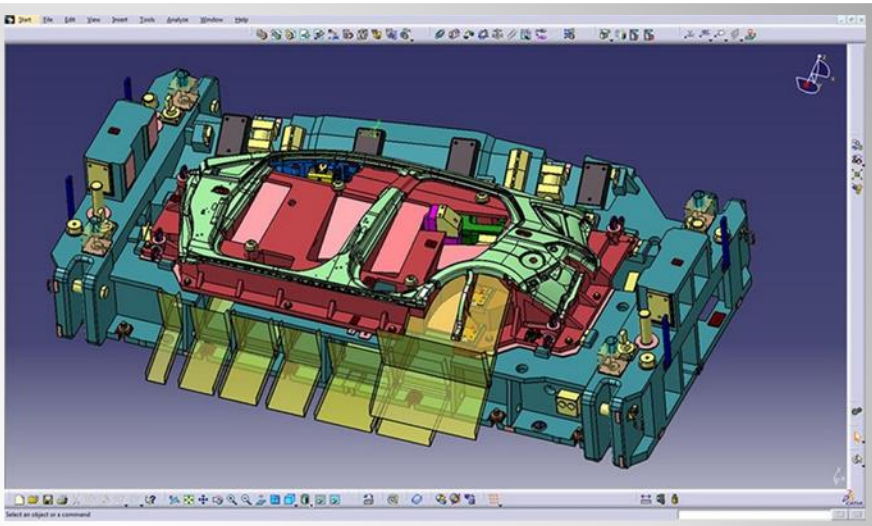

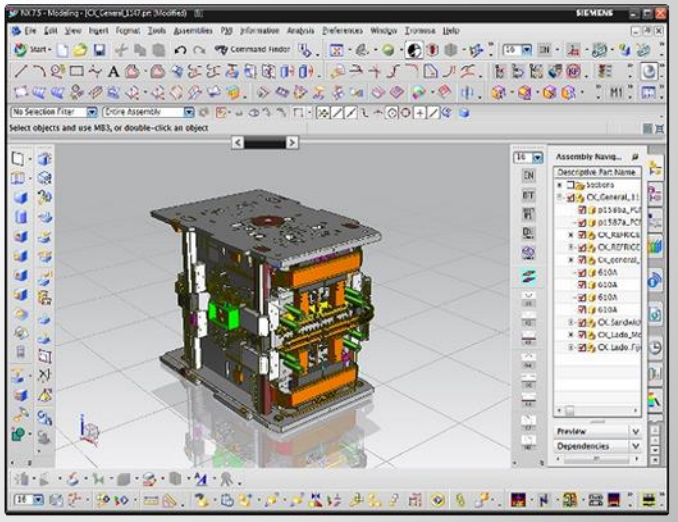

EXAMPLES OF CAD

- System by which the manufacturing operations are controlled through a computer, once the CAD model is carried out, we work with this model but directed to manufacturing.
- Programme and analyze the process
- *CNC*

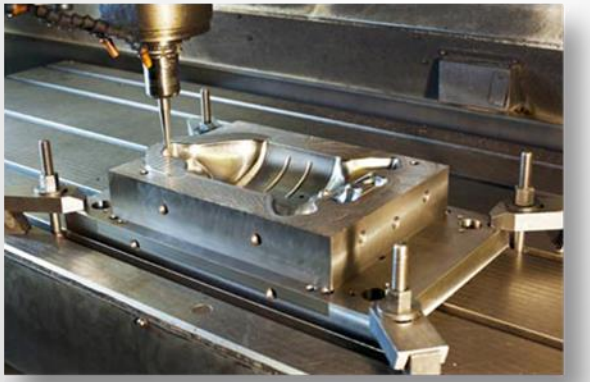

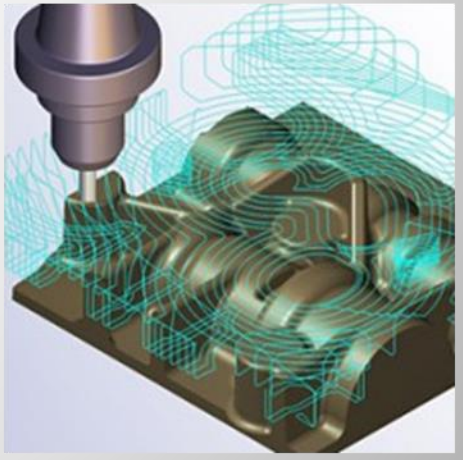

CAM

- AUTODESK CAM
- CATIA
- NX
- CAMWORKS
- CIMATRON
- EDGECAM
- TEBIS

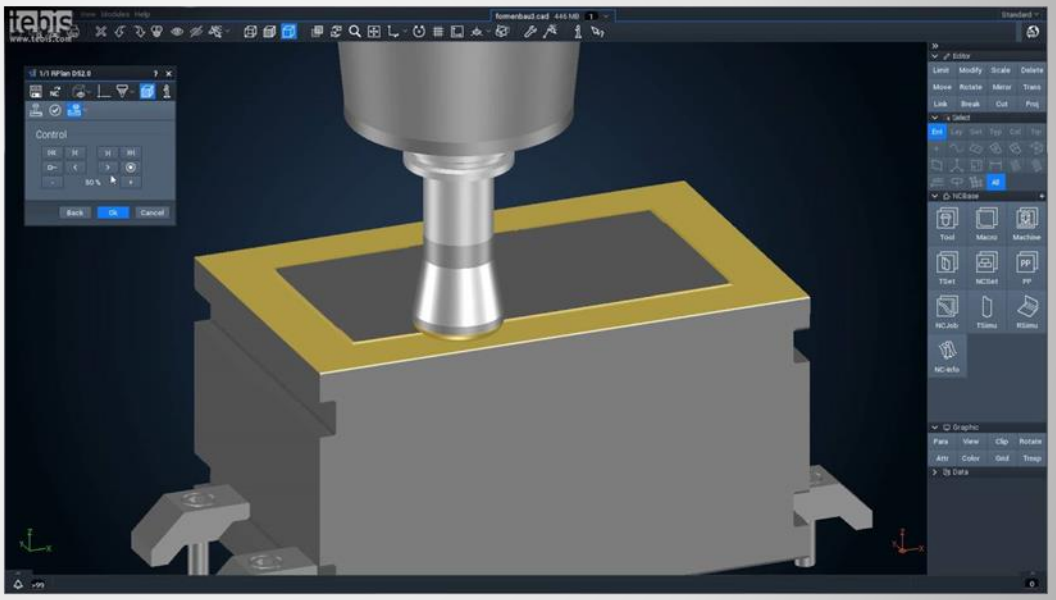

EXAMPLES OF CAM

- Automate the manufacturing process of the pieces
- Control the machine with a programm (seek to minimize the human intervention)
- Different process of machining→ turning, drilling and milling
- Safetier and faster method than traditional

CNC

- Main function → analyze the model of CAD
- Looking for → profitability
  → viability of the manufacturing
  → simulation

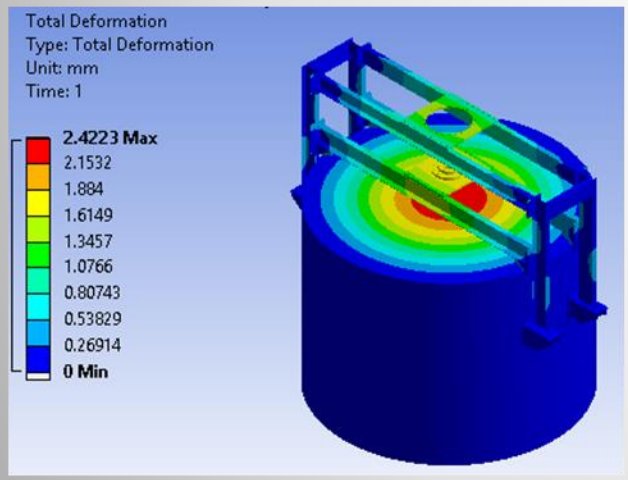

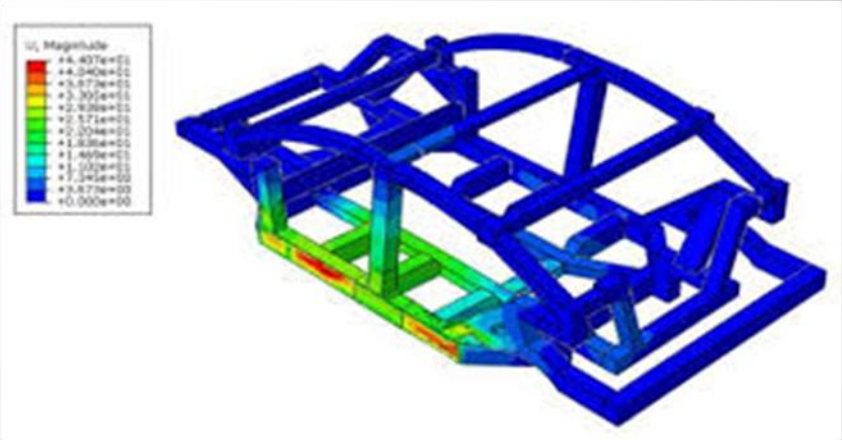

CAE

- CATIA
- NX
- FEMAP
- FLOW3D
- MAGMASOFT
- MSC SOFTWARE
- MOLDFLOW

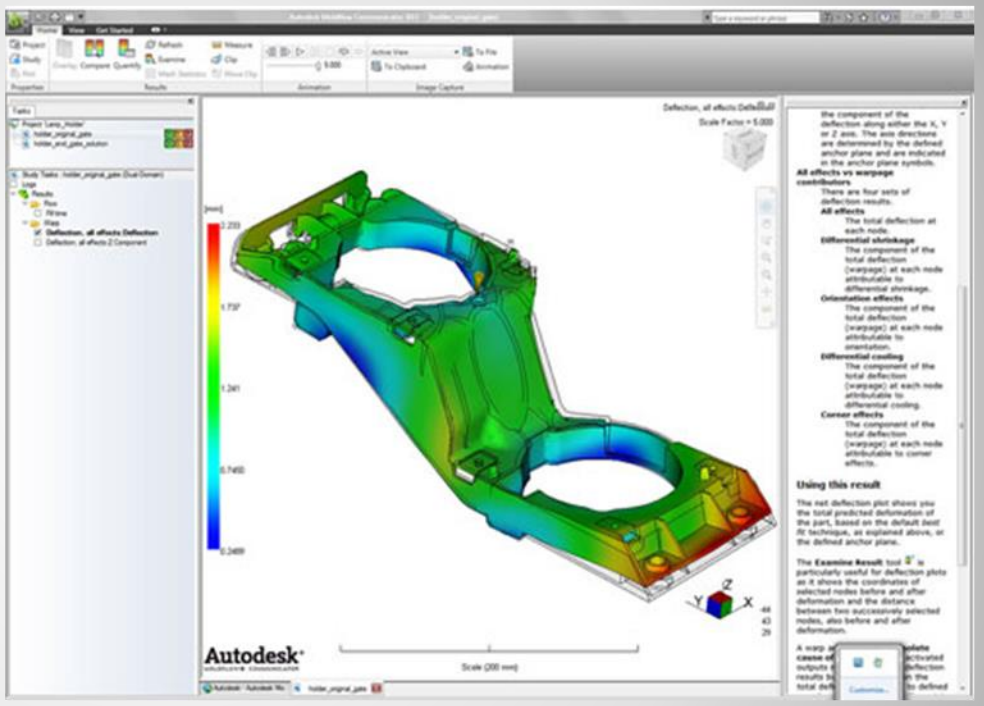

EXAMPLES OF CAE

Advanced Processing Technology (40 h)

UPenAUTO : 2017-1-ES01-KA203-03858

Erasmus+

UPenAUTO: UPSKILLED ENGINEERING PROFILES FOR THE AUTOMOTIVE SECTOR AND UPTAKE OF ALTERNATE SCHEME IN EUROPE´S HIGHER EDUCATION.

Gestamp

GTI
GESTAMP TECHNOLOGY INSTITUTE

FABRIKAZIOAREN ZENTRO AURRERATUA
CENTRO AVANZADO DE FABRICACIÓN

somorrostro
centro de formación / irakas-gunea

UNIVERSITATEA POLITEHNICA

PUNCH-CUT

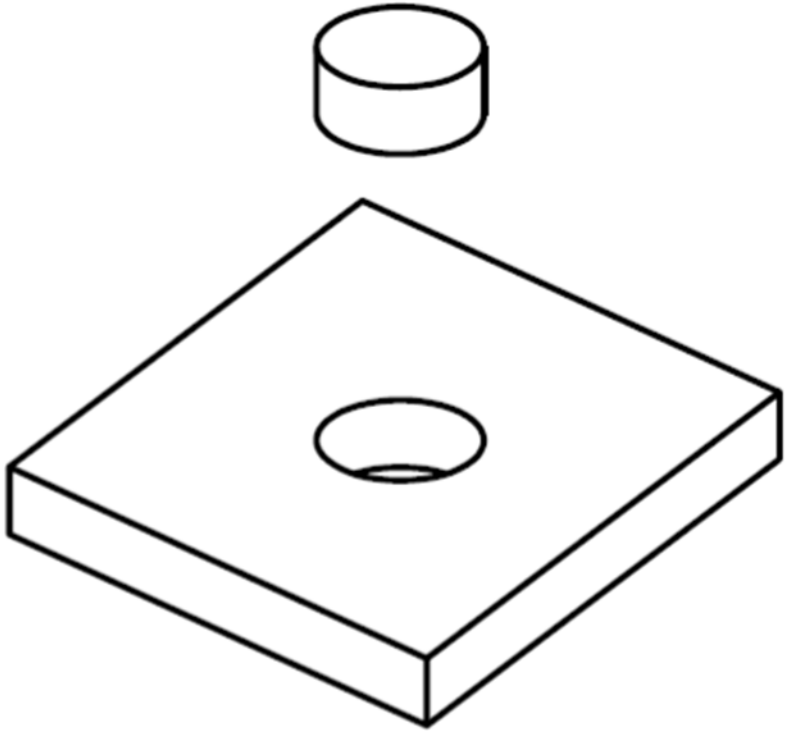

UPenAUTO : 2017-1-ES01-KA203-03858

BASIC IDEAS

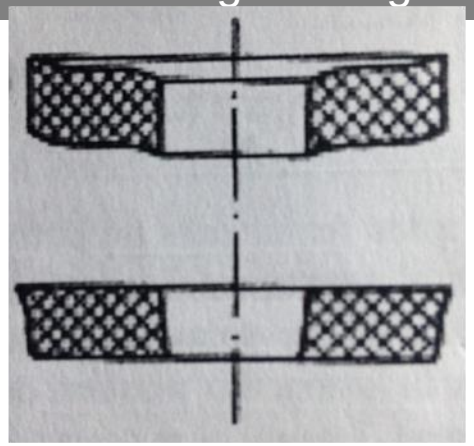

ØFLAT PUNCH ≥ 1,2 TIMES THICK

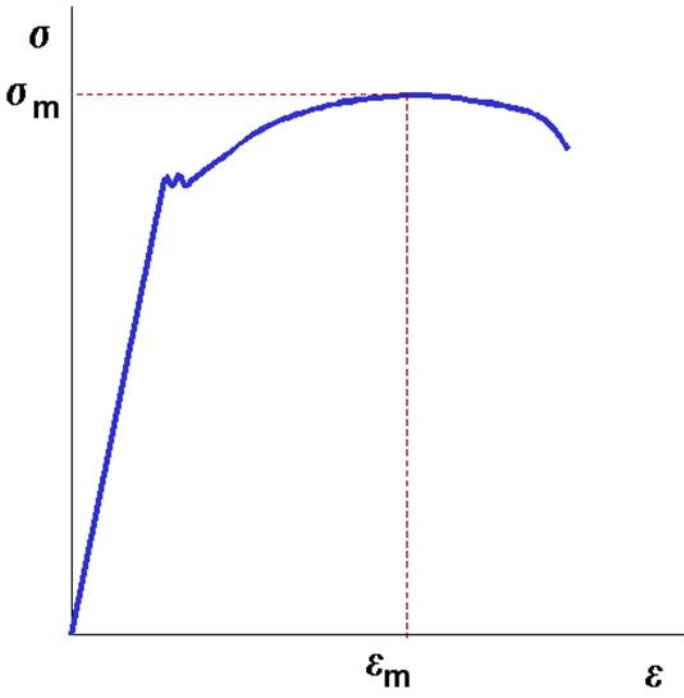

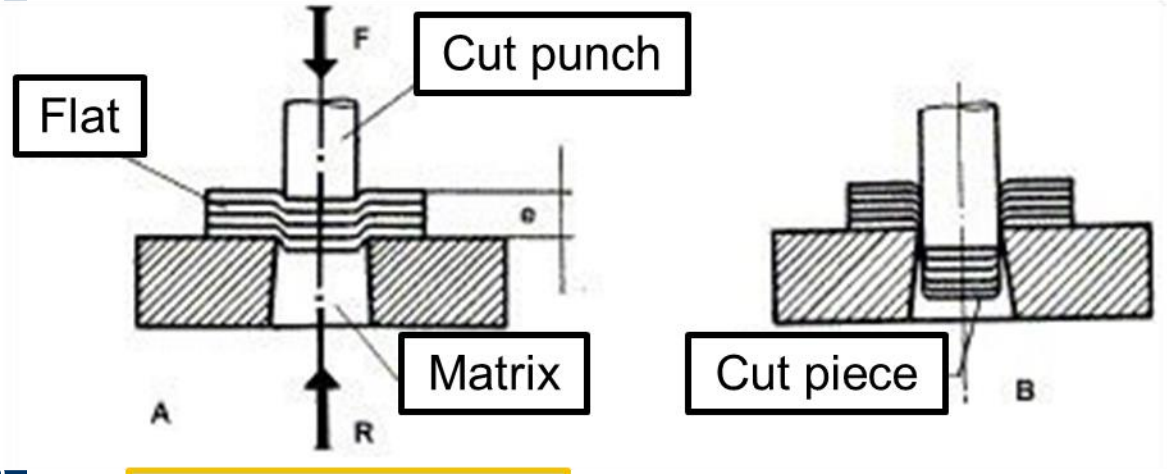

Penetration of the punch in the piece

Extraction of the scrap

Smax = 1,2 d → IRON / TEMPERED STEEL PUNCHES

DESCRIPTION OF SIMPLE CUTTING DIE

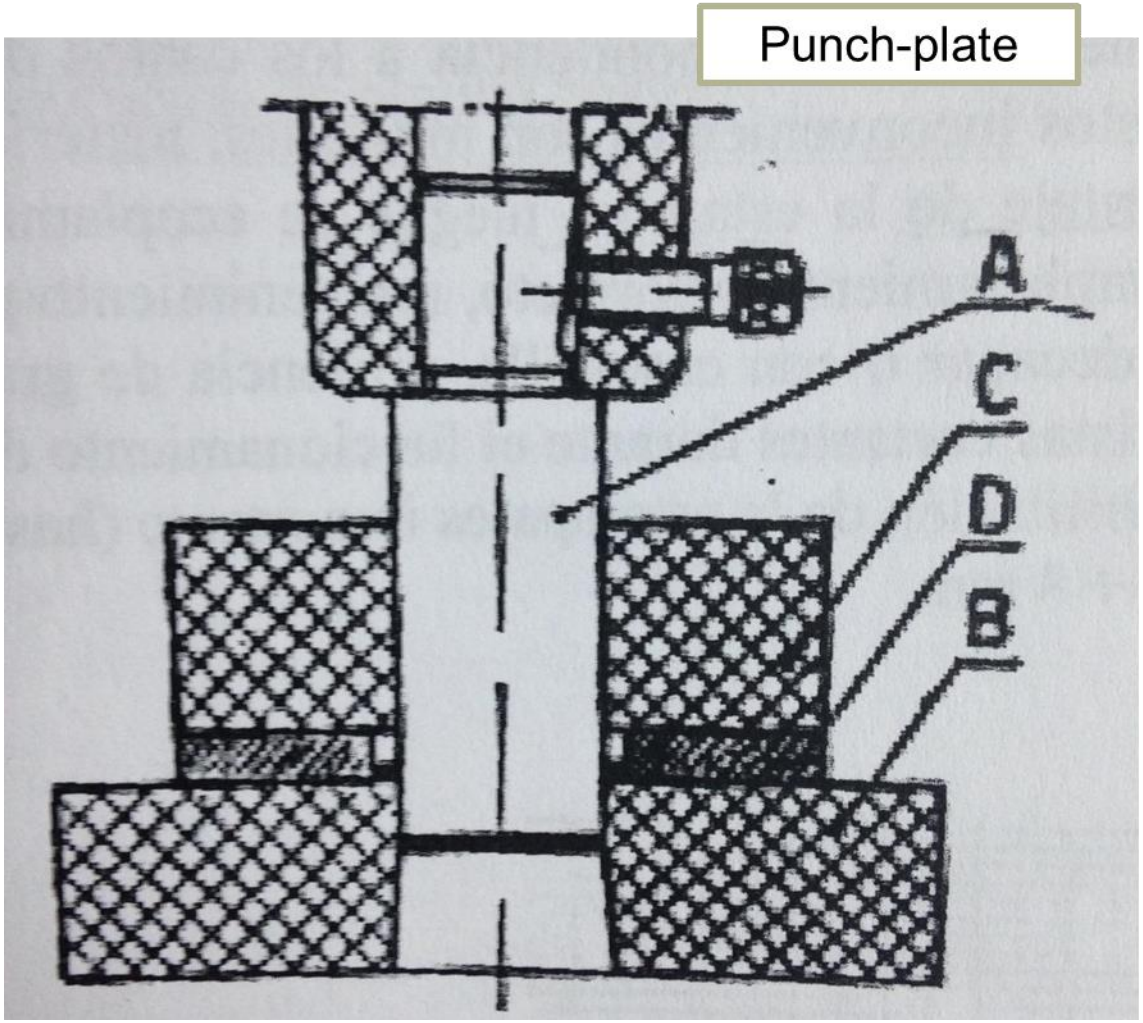

A) Punch
B) Matrix
C) Pad
D) Flat

UPenAUTO : 2017-1-ES01-KA203-03858

GAP

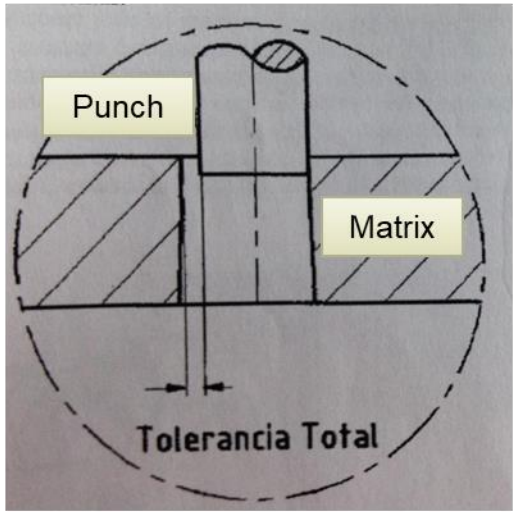

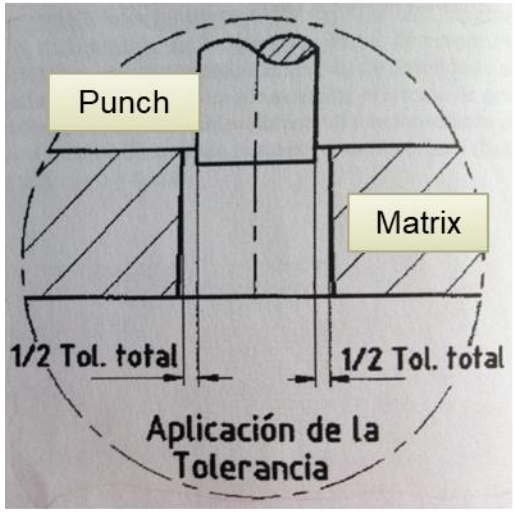

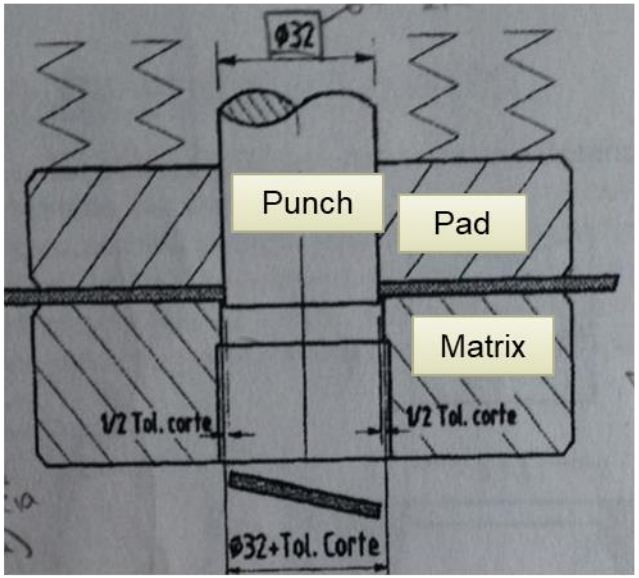

Hole to obtain ø32

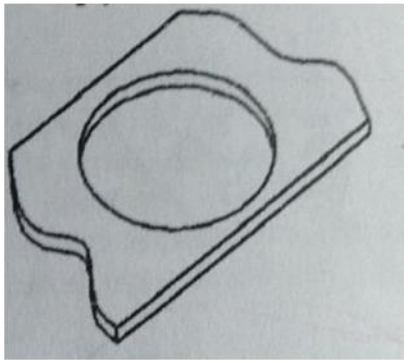

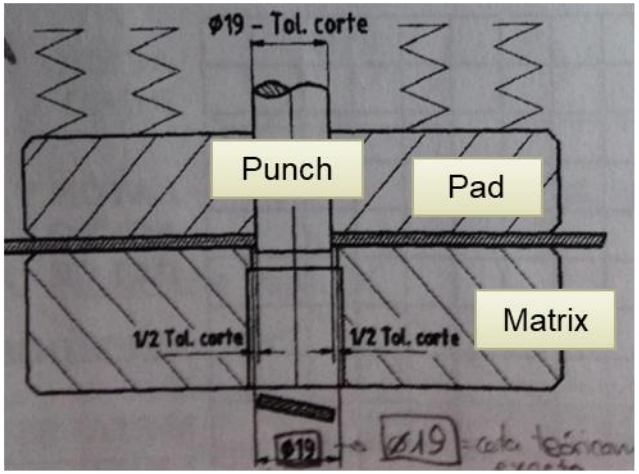

Disc to obtain ø19

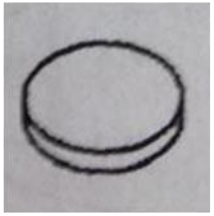

GAP

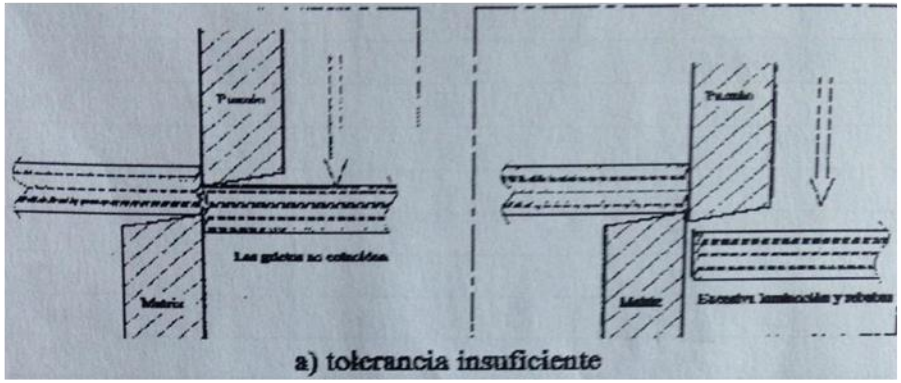

A) Insufficient tolerance

B) Excessive tolerance

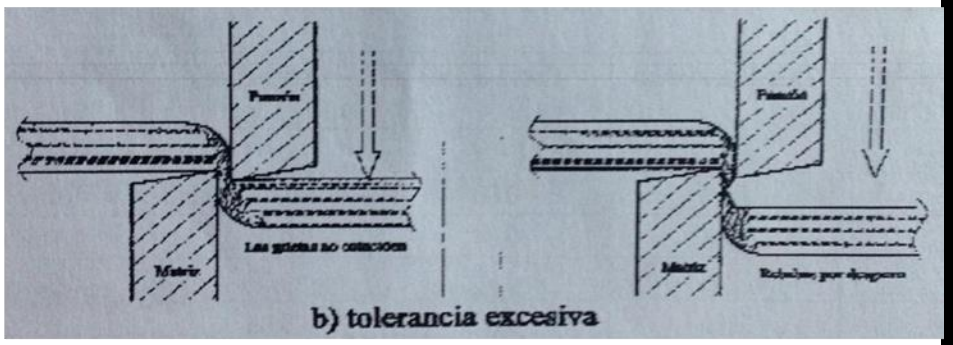

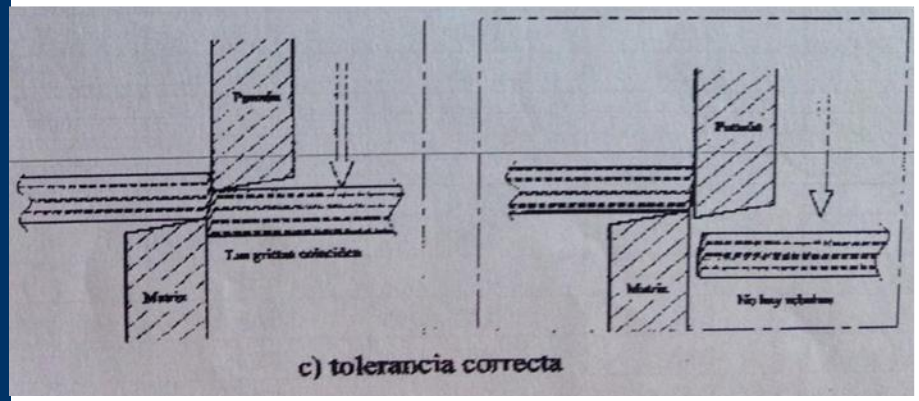

C) Correct tolerance

UPenAUTO : 2017-1-ES01-KA203-03858

Erasmus+

HOW WE CAN OBTAIN THE PARTS WITH THE DIRECTION AND DISPOSITION OF THE SLIVER

A

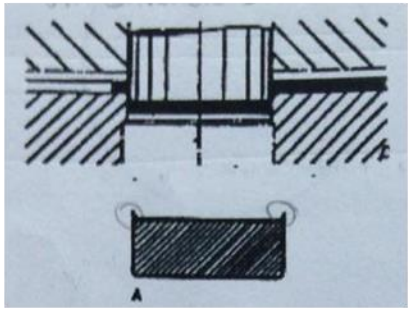

D

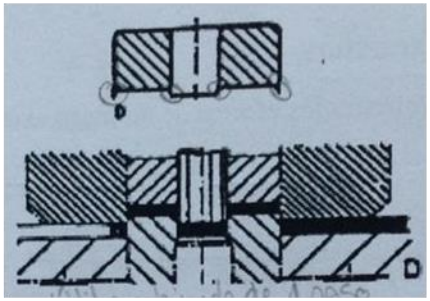

G

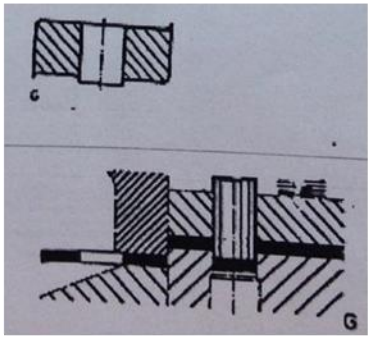

B

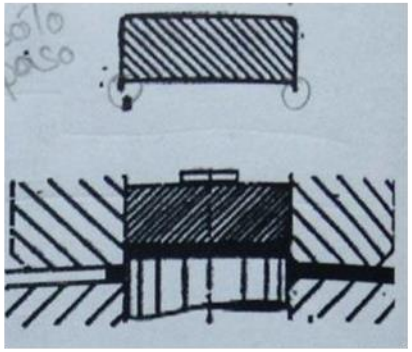

E

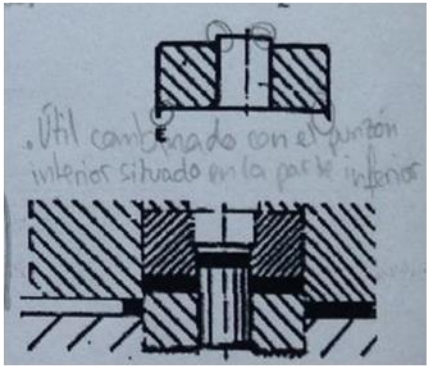

C

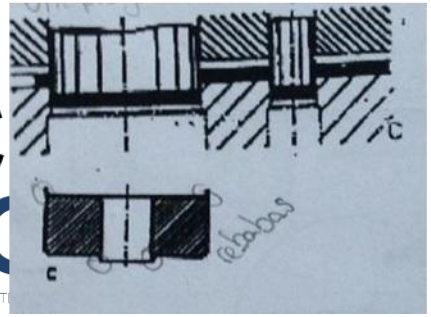

F

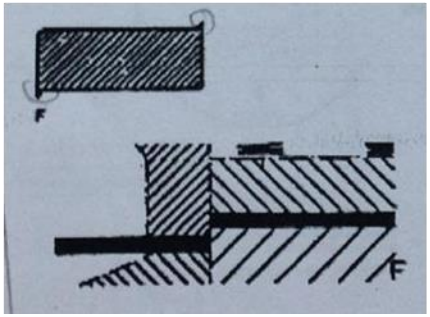

A) Conventional tool of one pitch.
B) Reversed tool of one pitch.
C) Progressive tool of two pitches.
D) Combined tool of one pitch.
E) Combined tool with punch in the middle of lower part.
F) Progressives tool or not of one or more pitches with the final cut in the last pitch.

UPenAUTO : 2017-1-ES01-KA203-03858

Erasmus+

METHODS TO OBTAIN THE CLEARANCE

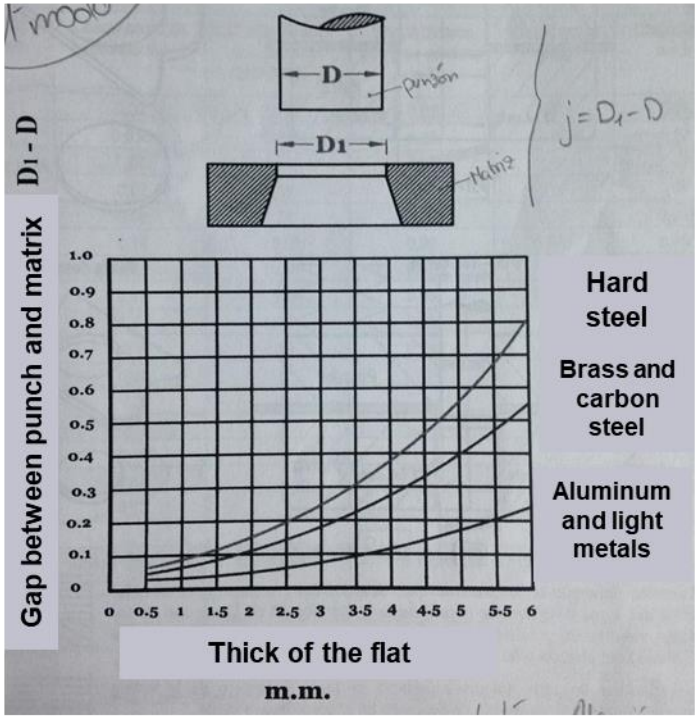

VALOR DEL JUEGO «J» DE RECORTADO EN FUNCION DEL ESPESOR Y DE LA CALIDAD DE LA CHAPA

Espesor de la chapa (x) mm	Chapa acero de embutición	Chapa dinamo con pequeña cantidad de Si	Chapa dinamo con gran cantidad de Si	Chapa acero dulce	Chapa latón dulce
0,25	0,02	0,015	0,01	0,015	0,01
0,5	0,035	0,03	0,02	0,03	0,02
0,75	0,05	0,04	0,03	0,04	0,03
1	0,07	0,05	0,04	0,05	0,04
1,25	0,09	0,06	0,05	0,06	0,05
1,5	0,11	0,075	0,06	0,075	0,06
1,75	0,13	0,09	0,07	0,09	0,07
2	0,15	0,105	0,08	0,105	0,08
2,5	0,17	0,13	0,11	0,13	0,11
3	0,2	0,16	0,14		0,14
3,5	0,25			0,25	0,18
4	0,3			0,325	0,21
4,5	0,37			0,41	0,27
5	0,45			0,5	0,325
5,5	0,53			0,62	0,4
6	0,62			0,75	0,48

Espesor de la chapa (x) mm	Chapa latón duro	Cobre dulce	Cobre duro	Aluminio	Duraluminio
0,25	0,015	0,015	0,02	0,008	0,02
0,5	0,03	0,03	0,035	0,01	0,04
0,75	0,04	0,04	0,05	0,015	0,06
1	0,05	0,05	0,07	0,02	0,08
1,25	0,06	0,06	0,09	0,03	0,1
1,5	0,075	0,075	0,11	0,04	0,12
1,75	0,09	0,09	0,13	0,05	0,14
2	0,105	0,105	0,15	0,06	0,16
2,5	0,13	0,13	0,17	0,08	0,19
3	0,16	0,16	0,2	0,1	0,22
3,5	0,2	0,22	0,25		
4	024	0,28	0,3		
4,5	0,3	0,34	0,37		
5	0,36	0,42	0,45		
5,5	0,43	0,5	0,53		
6	0,51	0,6	0,63		

Hard steel

$$J = \frac{5 + 2e^2}{100}$$

Brass and carbon steel

$$J = \frac{4 + 1.5e^2}{100}$$

Aluminum and light metals

$$J = \frac{3 + 0.5e^2}{100}$$

EXAMPLE 1: We need to cut discs of hard steel, of ø50 mm and 2,5mm thick. What dimensions must have the punch and matrix?

EXAMPLE 2: We must do 30mm of holes in some pieces of iron (high carbon) of 2mm thick. Which would be the dimensions of punch and matrix?

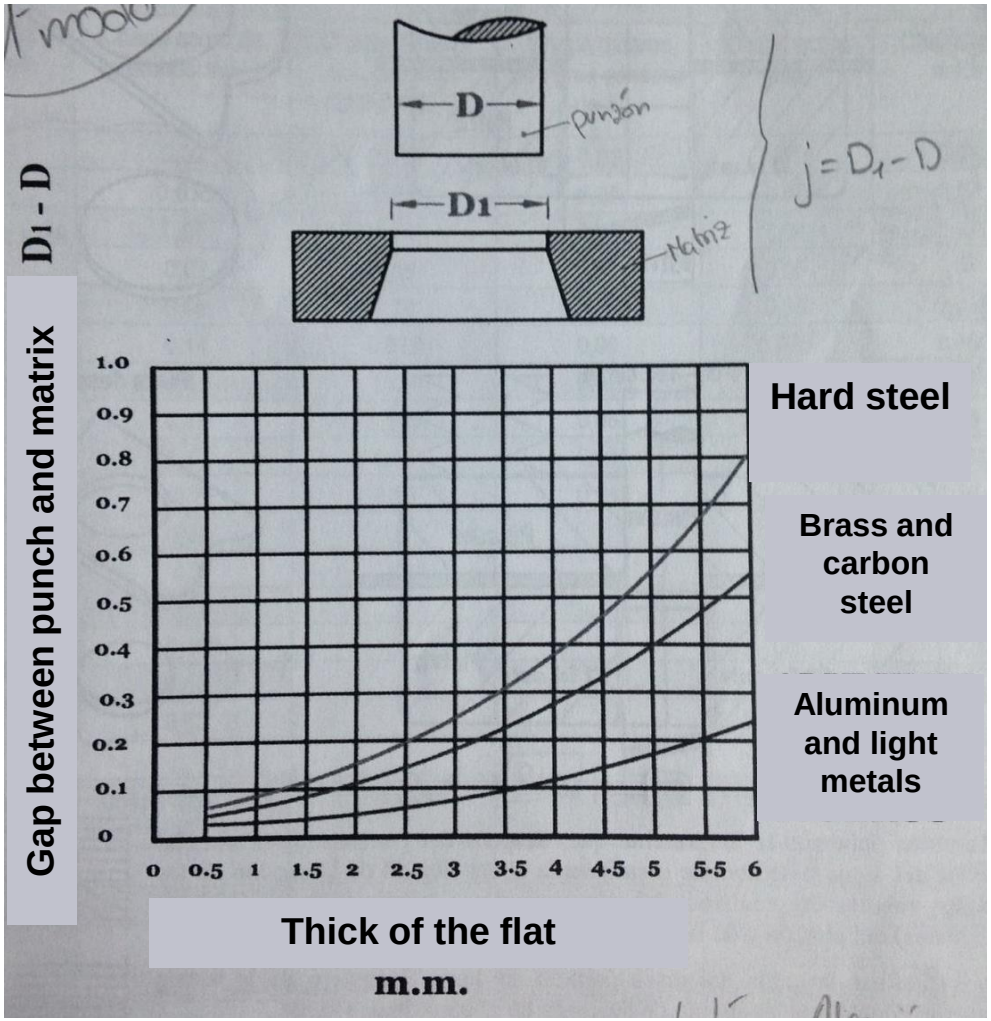

UPenAUTO : 2017-1-ES01-KA203-03858

MINIMUN DISTANCES BETWEEN PIECES AND BETWEEN PIECE AND SIDE OF METAL BAND

Between pieces: (S)

- S = 1.5·e ≥ 1mm, if the face to face sides are parallels.
- S = e ≥ 1mm, if the minimum separation is puntual.

Between piece and side of metal band: (S')

- S' = 1.5·e ≥ 1mm, when the side of the piece is parallel to the metal band's side.
- S' = e ≥ 1mm, when the proximity between the side and the metal band´s side is puntual.

MÁRGENES DE SEPARACION APROX. TABLA 2

e	a= Ancho de banda										
	20	40	80	120	150	200	400	500	600	800	1000
	Valores S										
0.5	1	1.2	1.5	2	3	3.5	4	4.5	5	5.5	6
0.8											
1.0	1.2	1.6	1.8	2.5	3.5	4	4.5	5	5.5	6.5	7
1.2											
1.5	2	2.2	2.5	3	4	4.5	5	5.5	6	7	8
2.0											
2.5	3	3.2	3.5	4	5	5.5	6	6.5	7	8	10
3.0											
4.0	5			6			7			8	12
5.0											
6.0	6			8			10			12	16
7.0											
8.0	8			10			12			14	18
10											

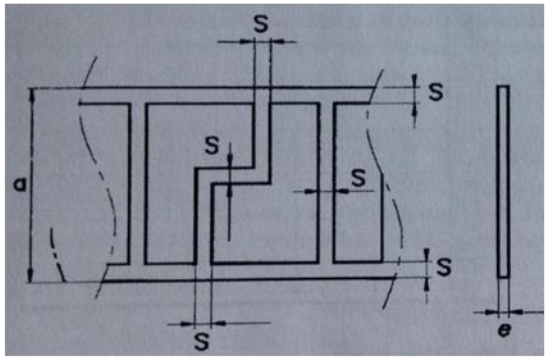

MÁRGENES DE SEPARACION APROX. TABLA 1

e	a= Ancho de banda					
	20	40	80	120	150	200	400	500	600	800	1000
	Valores S										
0.5	1	1.2	2	3.5	4.5	5.5
0.8						
1.0	1.2	1.6	2.5	4	5	6.5
1.2						
1.5	2	2.5	3	4.5	5.5	7
2.0						
2.5	3	3.5	4	5	6	8
3.0						
4.0	4.5	5	5.5	6	7	8.5
5.0						
6.0	7	7.5	8	9	10	12
7.0						
8.0	10	11	12	14	16	18
10						

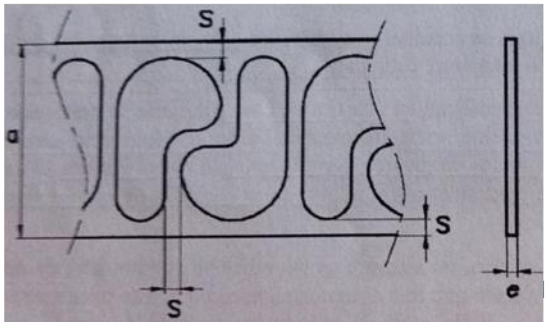

DIFFERENT DISPOSITIONS IN THE STRIP LAYOUT

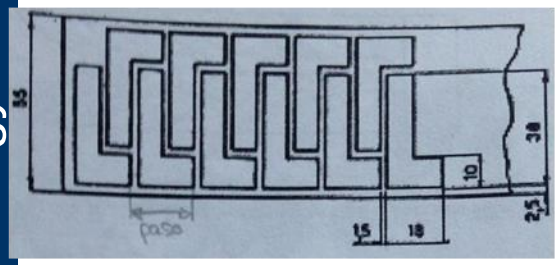

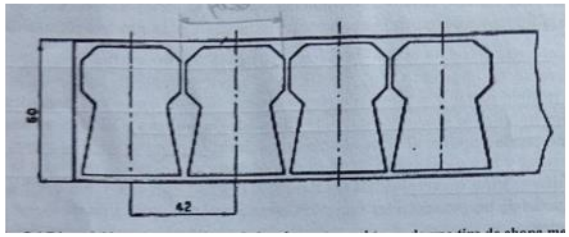

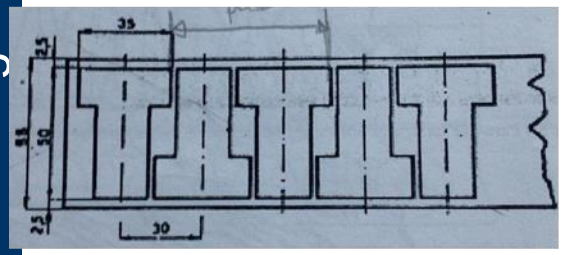

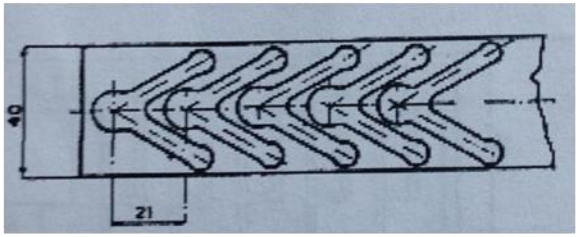

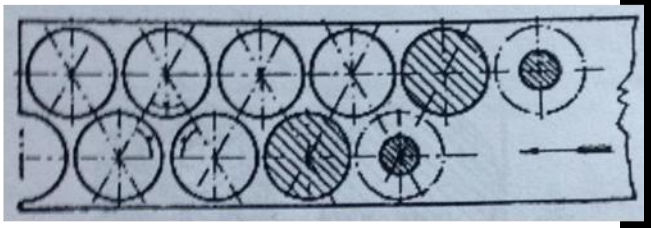

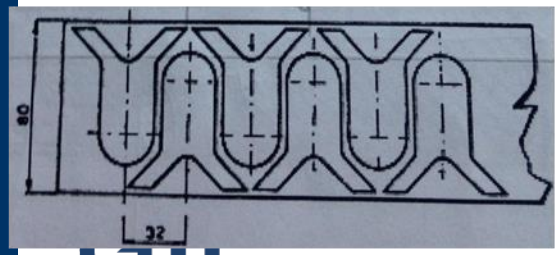

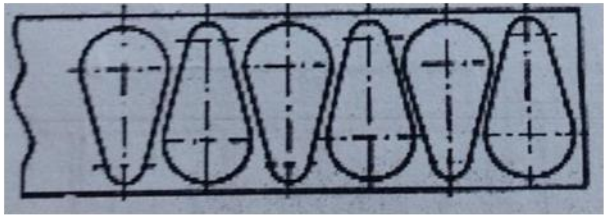

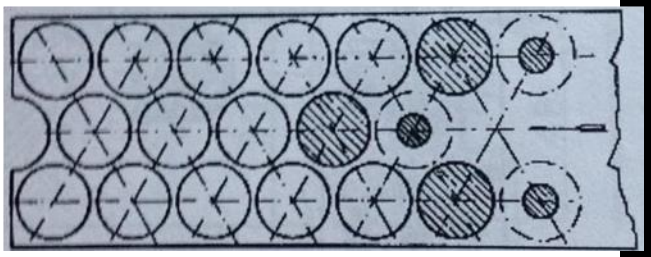

EFFORTS

Cutting effort: (Q)

$$Q = p \cdot \sigma_T \cdot t$$

where,
p: perimeter of the figure (mm).
t: thick of the flat (mm).
σ_T: break quantity in cutting (kg/mm^2)
σ_R: break quantity in traction (kg/mm^2)

σ_T : $\frac{3}{4}$ to $\frac{4}{5}$ of σ_R

σ_T : 75% - 80% of σ_R

Cutting force

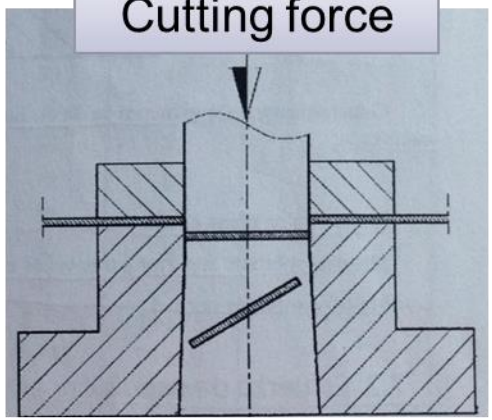

Extraction force

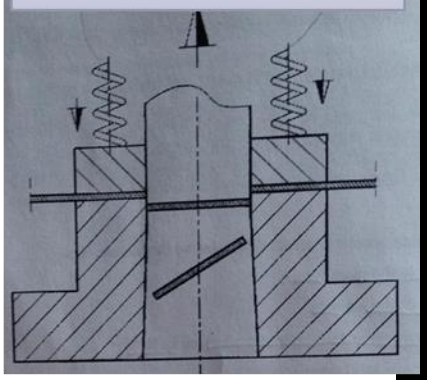

Important!!

Take into account the friction created between the punch and matrix due to the dilated material…

$$Q' = 1{,}1 \div 1{,}2 \cdot Q$$

- Cut the flat — E_{ex} = 7% Q
- Excess material more than 3 times thick — E_{ex} = 2 to 7% Q
- Normal excess material — E_{ex} = 2% Q

Expulsion force → E_{ef} = 1,5% Q

UPenAUTO : 2017-1-ES01-KA203-03858

Erasmus+

FUNCTIONING OF A DIE

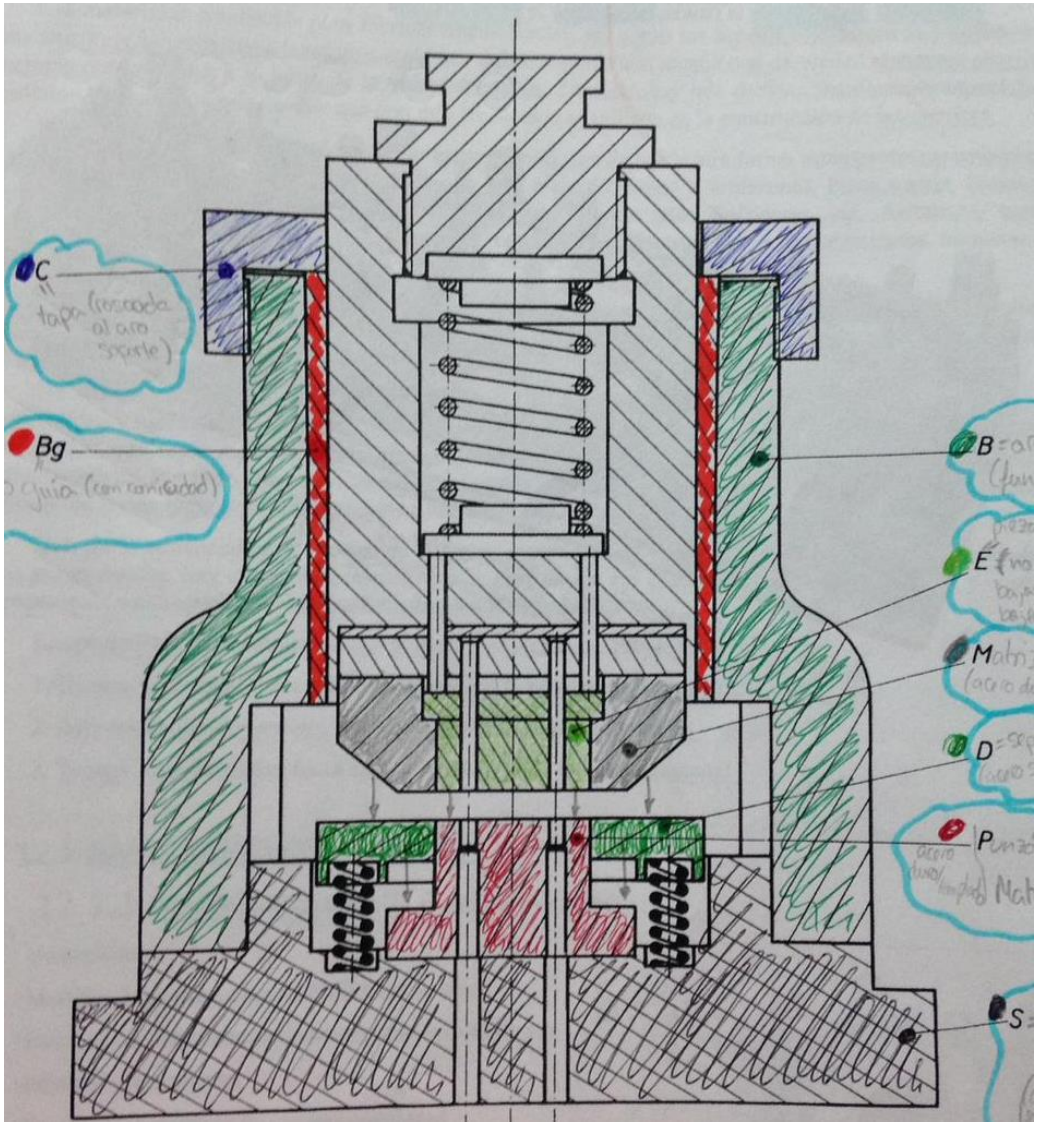

VIDEO

FOLD-BEND

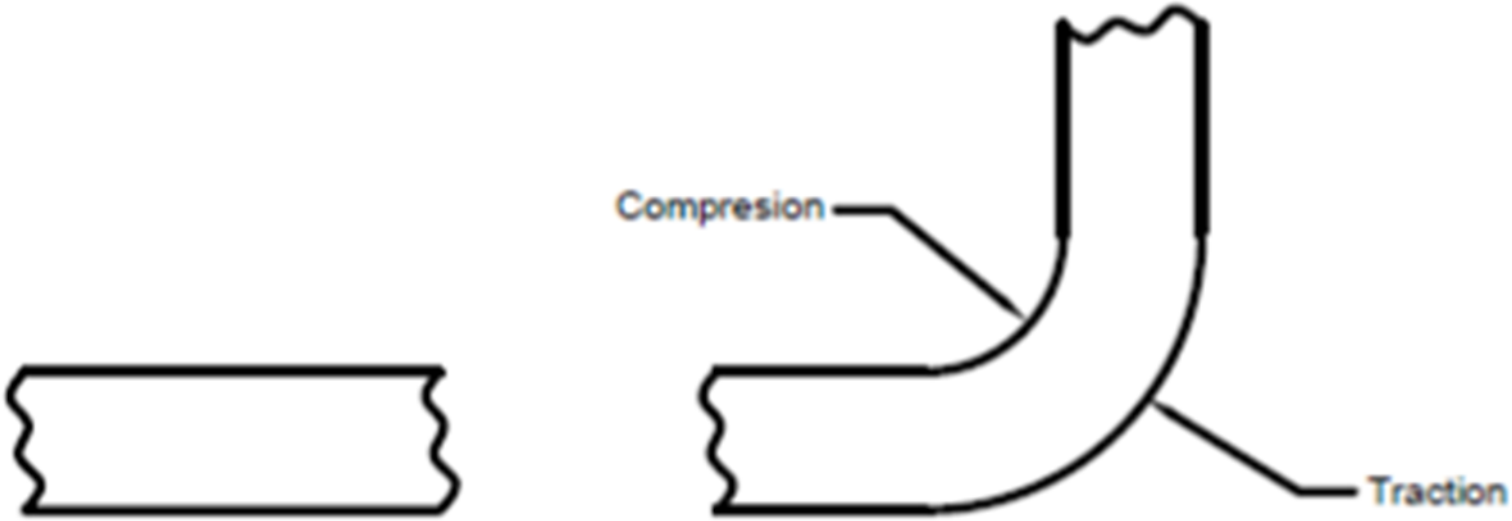

UPenAUTO : 2017-1-ES01-KA203-03858

BASIC IDEAS

V

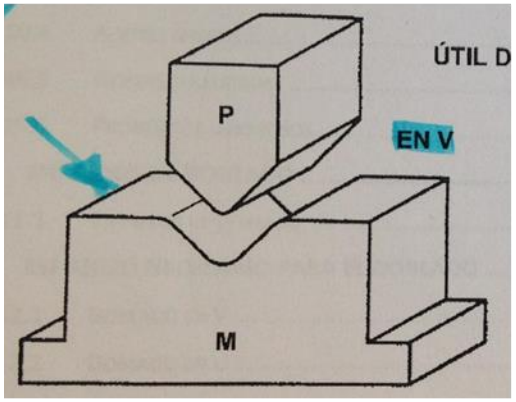

U

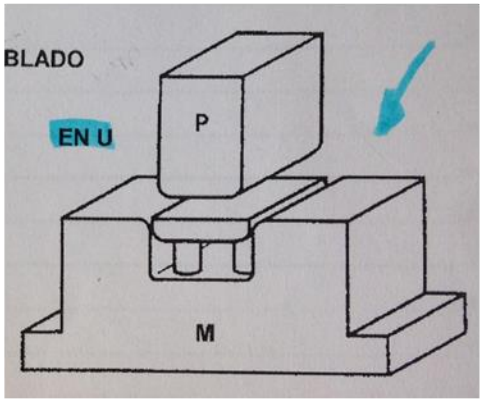

In bending take into account:
- Elasticity.
- Fold radius.
  - Carbon materials: 1 to 2 times thick.
  - Hard materials: 3 to 4 times thick.

- P punch: form of the piece.
- M matrix: must let the material flow.

Important!!

1- The part must not suffer any strange movement during the bend.
2- The interior radius of the bend will be minimum the same as the thick.

-Cooper
-Brass
-Form flat

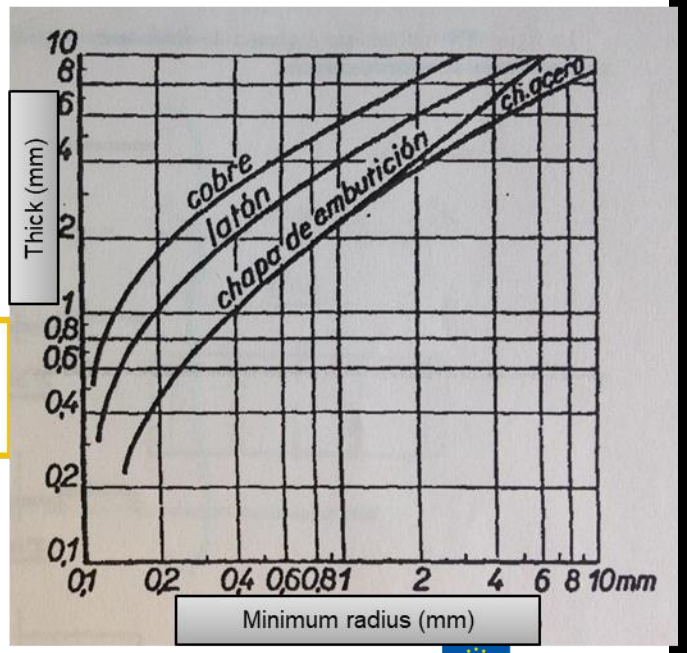

UPenAUTO : 2017-1-ES01-KA203-03858

Erasmus+

BENDING RADIUS

KEY! → marks in the piece → NO OK

OK

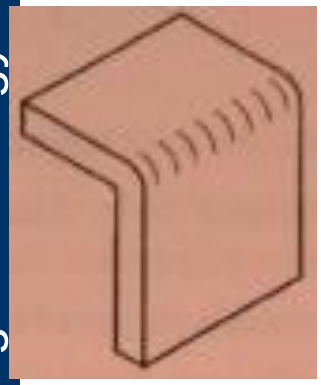

NO OK

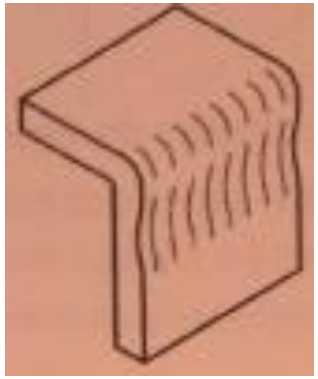

OPTIONS TO AVOID THE PROBLEM

1

Thick < 1mm
→ Punch Rmin = 2 mm

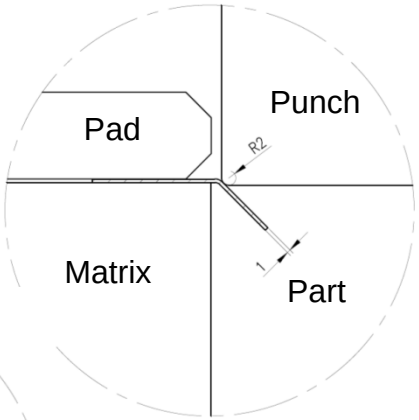

2

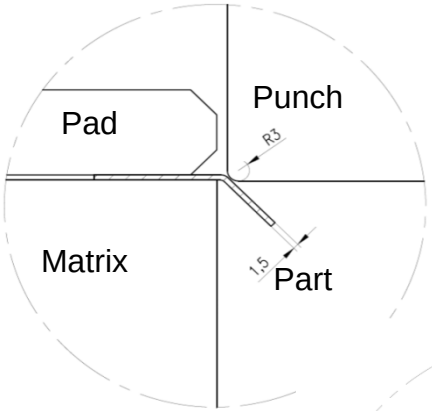

nm < Thick < 2 mm
Punch Rmin = 2·thick mm

3

(Chamfer)

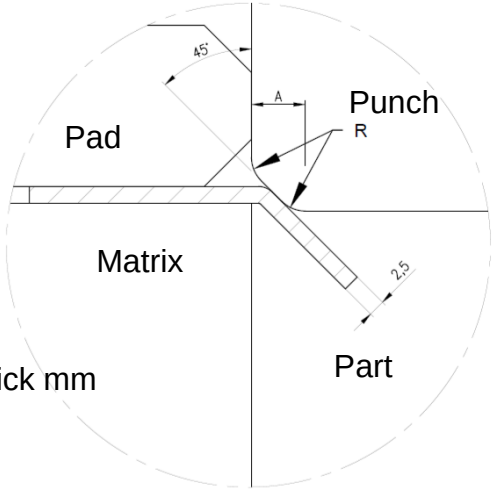

2mm < Thick < 3 mm
→ Punch Rmin = 2·thick mm
→ A = 2·thick mm

4 (Chamfer)

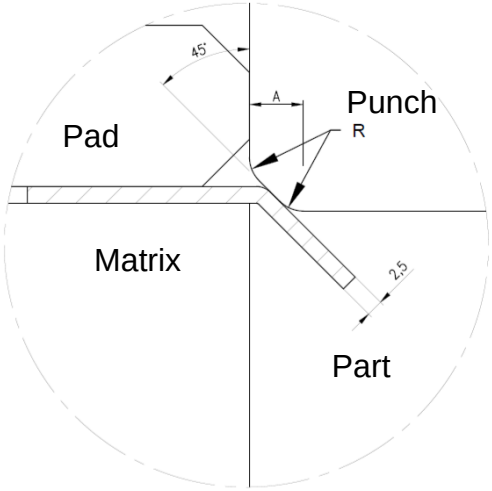

Thick > 3mm
→ Punch Rmin = 3·thick mm
→ A = 2·thick mm

NEUTRAL FIBRE

1

$$R_f = r + y$$

where,
R_f: radius of the neutral fibre (mm)
r: interior radius
t: thick (mm)
y: obtain by the following table

r/t	y
0,2	0,347 · t
0,5	0,387 · t
1	0,421 · t
2	0,451 · t
3	0,465 · t
4	0,470 · t
5	0,478 · t
10	0,487 · t

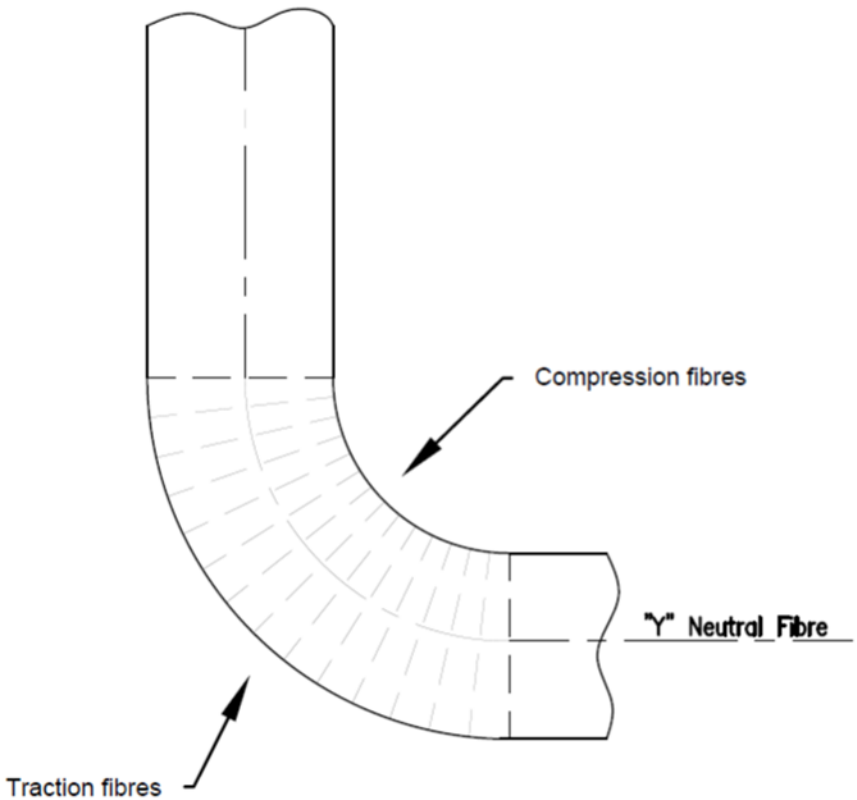

2

$$R_f = r + a \cdot t/2$$

where,
R_f: radius of the neutral fibre (mm)
a: constant
t: thick (mm)

r/t	Till 0,5	0,8	1,2	2	3	5 and more
a	0,5	0,6	0,7	0,8	0,9	1

LENGTH OF A FOLDING FLAT (NEUTRAL FIBRE 1)

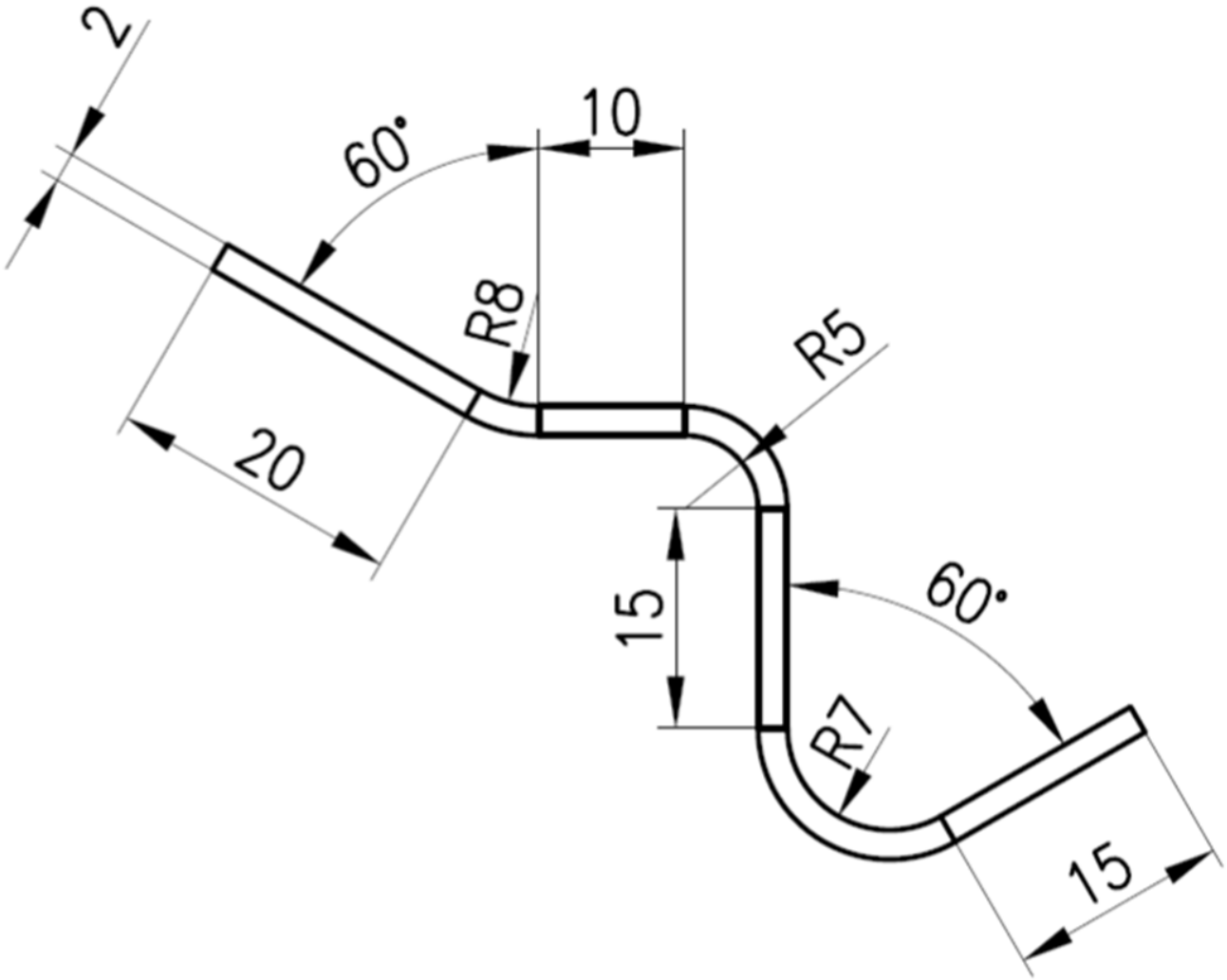

UPenAUTO : 2017-1-ES01-KA203-03858

LENGTH OF A FOLDING FLAT (NEUTRAL FIBRE 2)

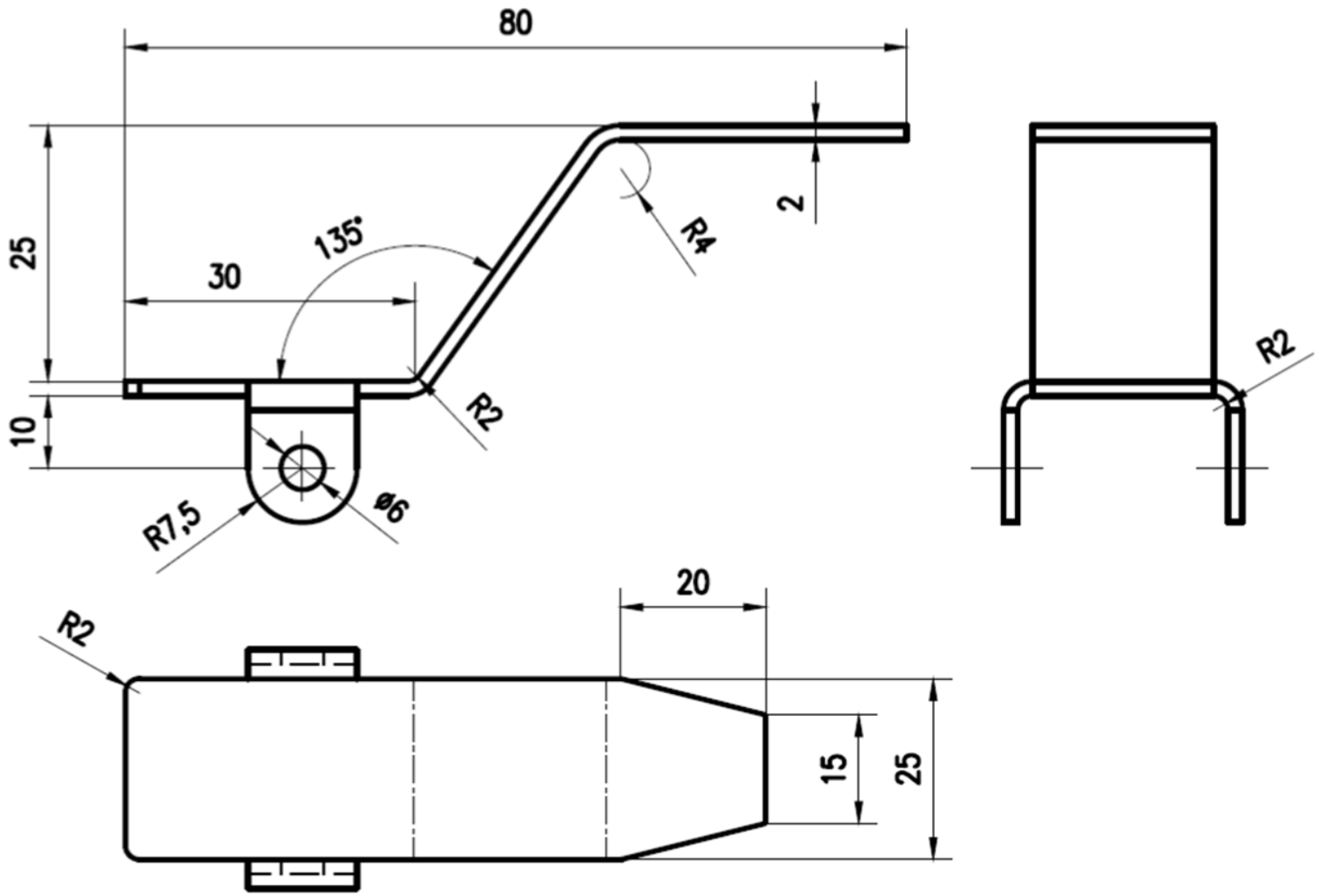

UPenAUTO : 2017-1-ES01-KA203-03858

LENGTH OF A FOLDING FLAT (NEUTRAL FIBRE 3)

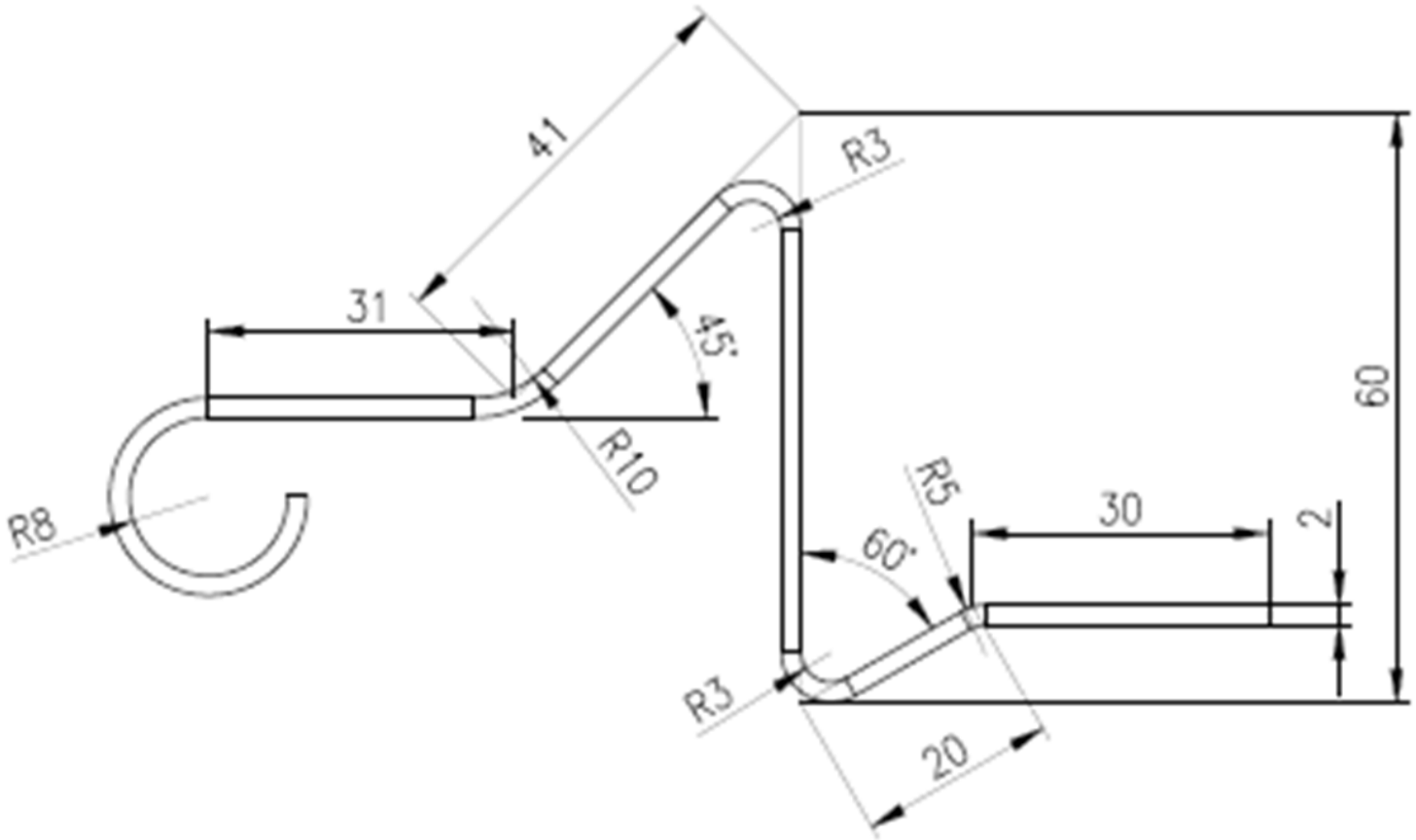

SPRING BACK

Def: Characteristic of the material that tends to obtain the previous form.

Spring back depends on…

- Fold radius
- Material resistance
- Fold angle
- Thick of material

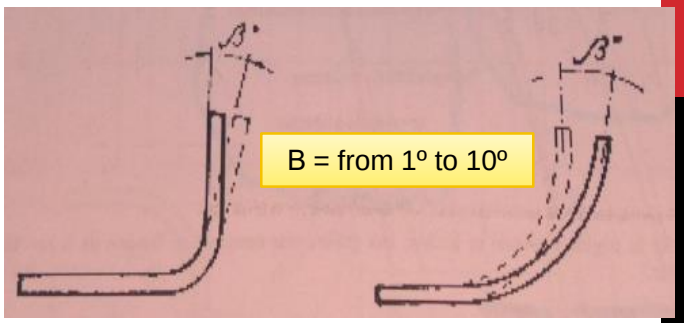

Procedure

1º $X = R_2 / t$

2º Find X in the grafic and get the K constant depending on the material

3º $R_1 = K \cdot (R_2 + t/2) - t/2$

4º The angle that we want obtain in the piece (X_2) divided by K constant

$$X_1 = X_2 / K$$

K

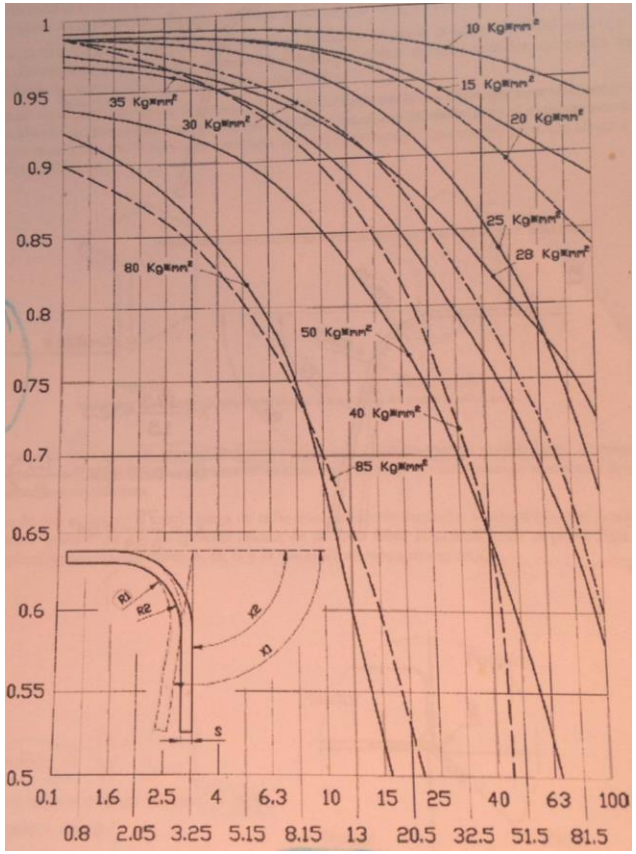

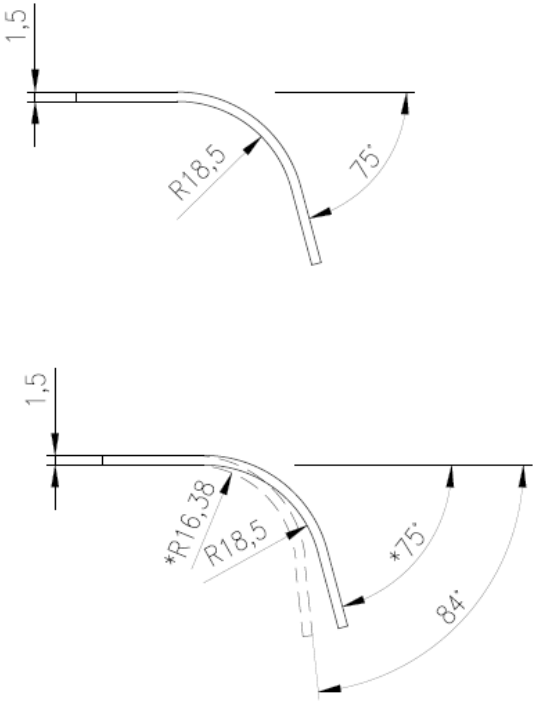

X

VIDEO

BREAK FIBRES

Surpass the theoretic angle in order to have the desired angle after the spring back. (3 examples)

A) Simple one (don't use in resistant materials neither big thicks). Do in the matrix a negative angle from 3º to 5º to allows the material bend more than if it wasn't.

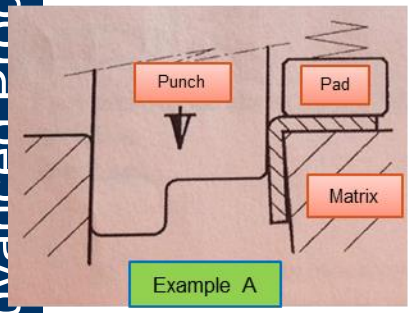

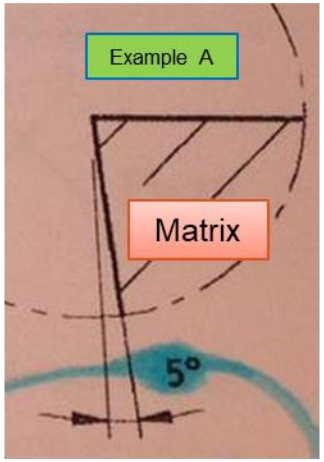

B) Similar to the previous one. Mill the matrix getting a zone with more material.

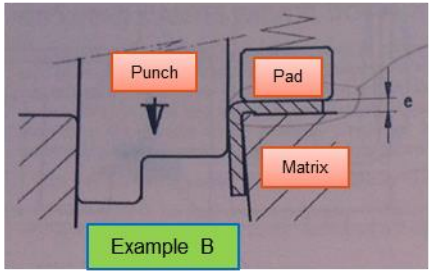

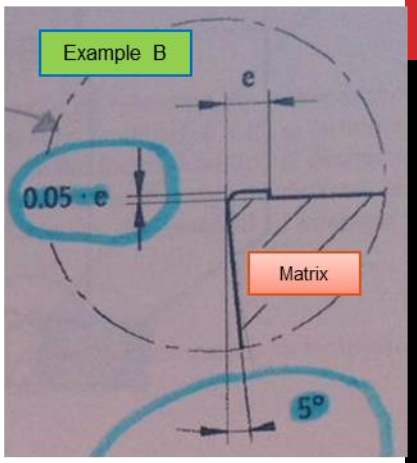

C) Make bigger the punch interior radius with an exit angle. In this way, it doesn't press too much.

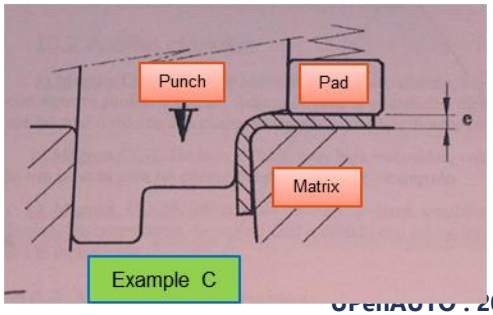

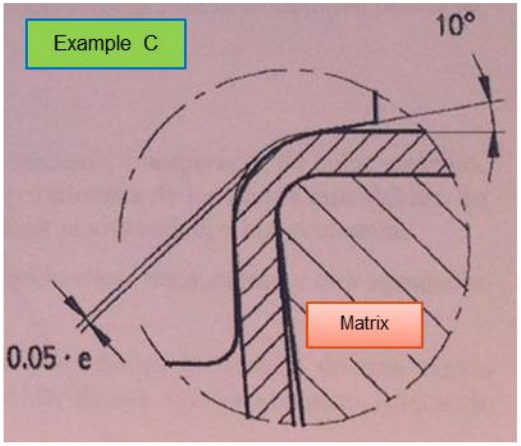

FOLDING METHODS

Central action fold
(in V, for large profiles)

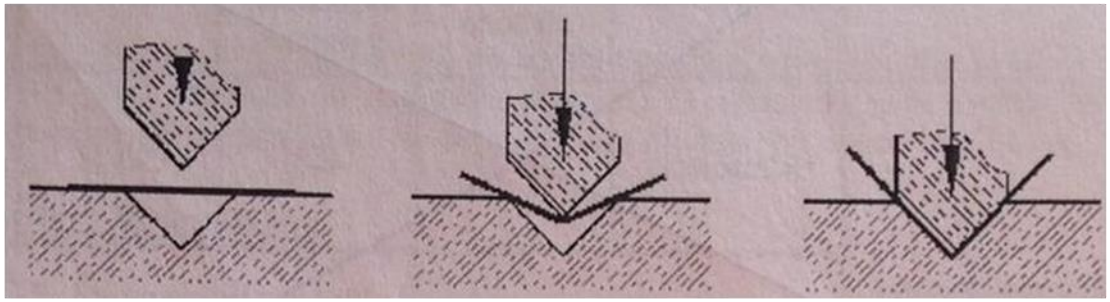

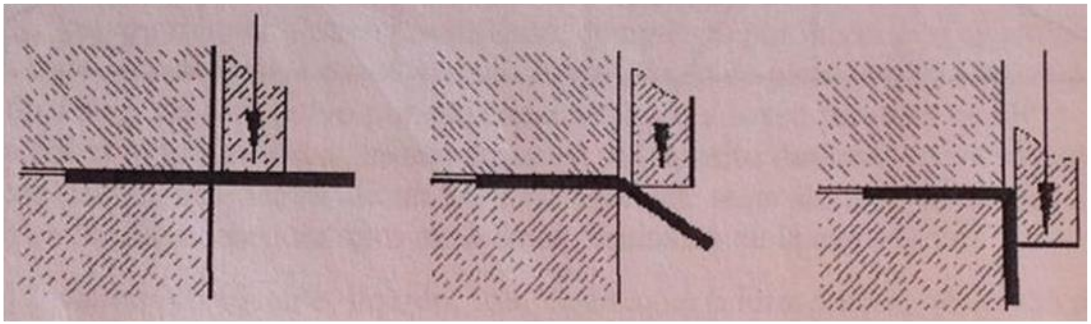

Lateral action fold
(in L or U, the more used for small pieces)

Front action fold
(closed profiles)

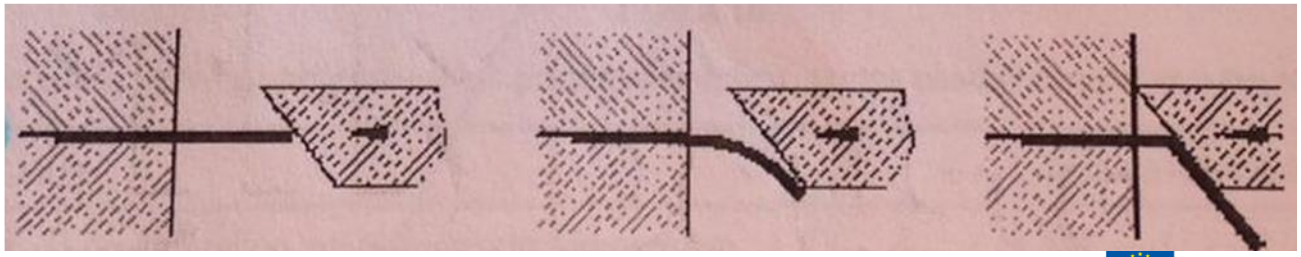

EXAMPLES OF BENDING

OK

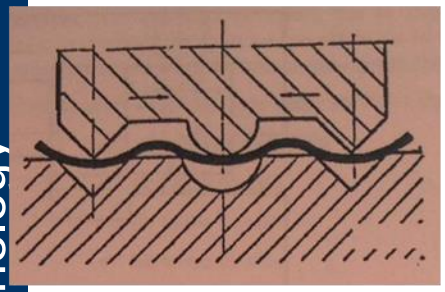

NO OK

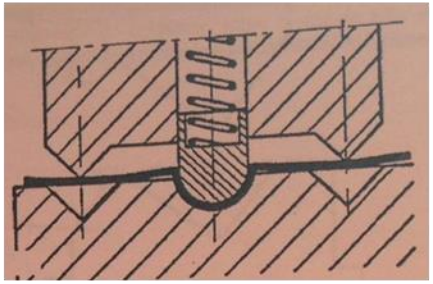

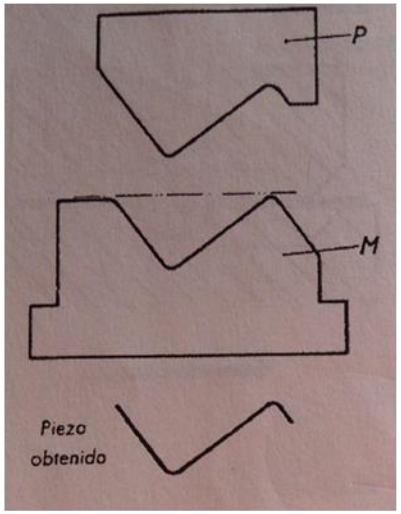

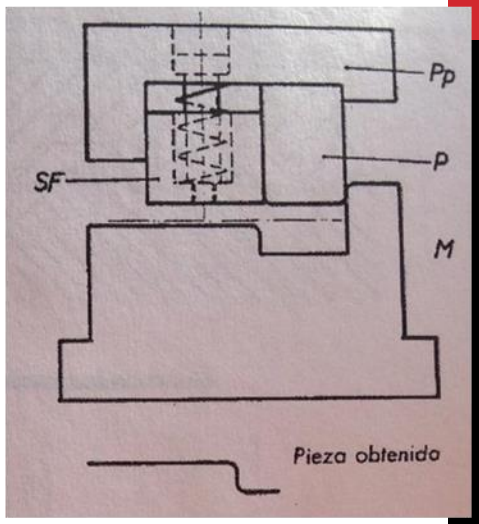

OK

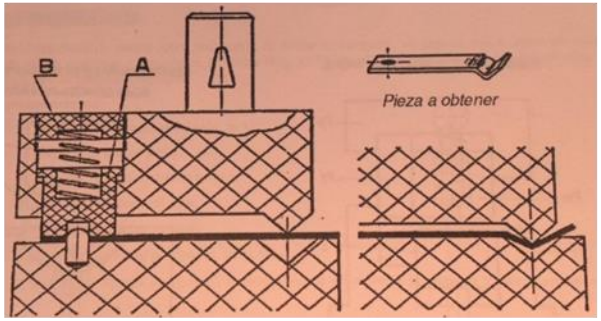

NO OK

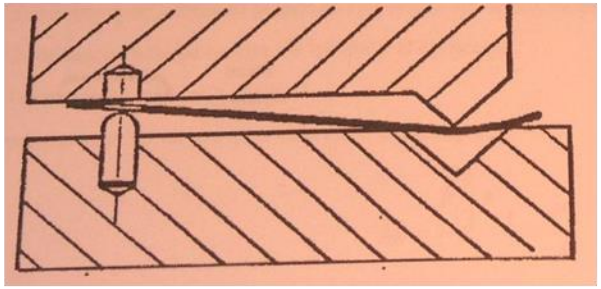

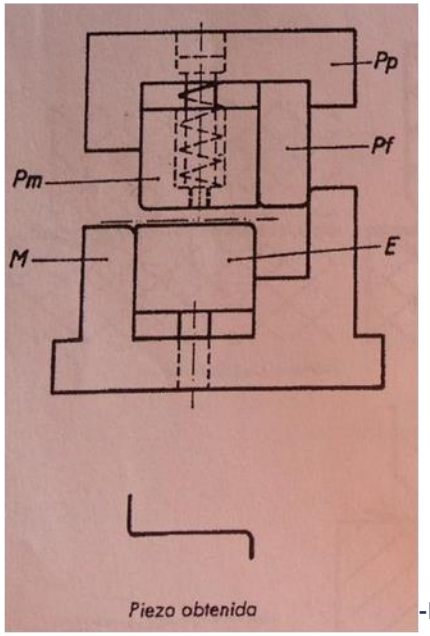

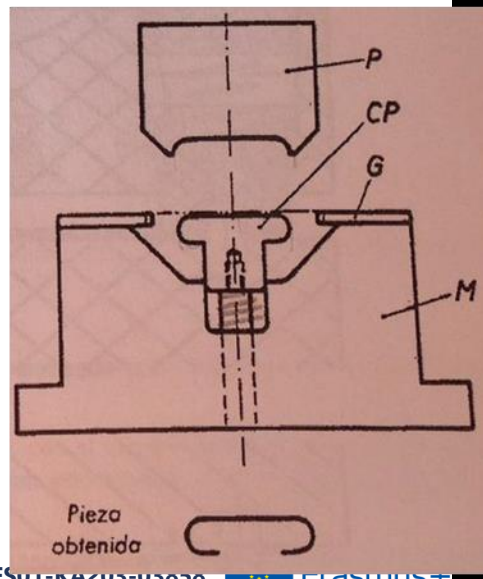

EFFORTS

Necessary effort to fold in V

$$P_V = \frac{2 \cdot \sigma_d \cdot b \cdot s^2}{3 \cdot l}$$

where,
P_V: neccesary effort
σ_d (tension of cut): $2 \cdot \sigma_R$ (tension of traction)
b: width of the flat
s: thick
l: distance between supports

Necessary effort to fold in U

$$P_U = \frac{\sigma_d \cdot b \cdot s}{3}$$

where,
P: neccesary effort
σ_d (tension of cut): $2 \cdot \sigma_R$ (tension of traction)
b: width of the flat
s: thick

Necessary effort to fold in L

$$P_L = \frac{1}{2} \cdot P_U$$

where,
P_U: effort to fold in U

UPenAUTO : 2017-1-ES01-KA203-03858

GAP BETWEEN PUNCH AND MATRIX

$$\underline{Gap:} \quad t + \frac{1}{10}t = \frac{11}{10}t$$

* If we want the interior exactly → the matrix has tolerance

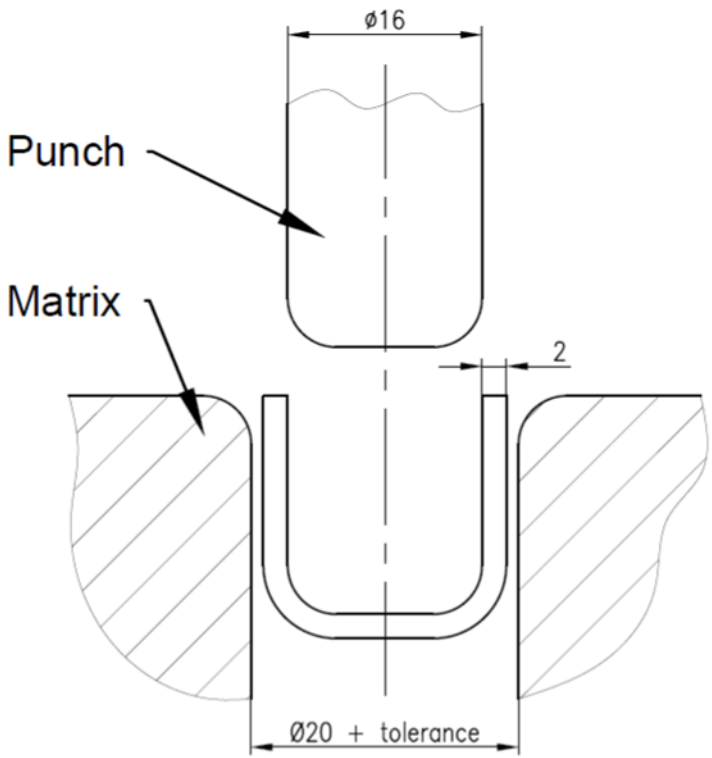

* If we want the exterior exactly → the punch has tolerance

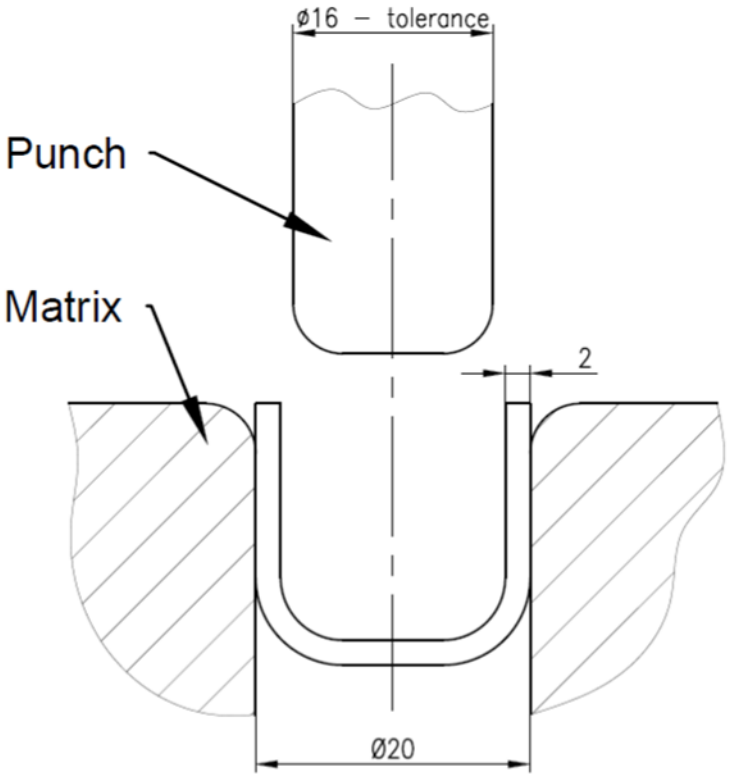

TYPES OF CAMS AND FUNTIONING

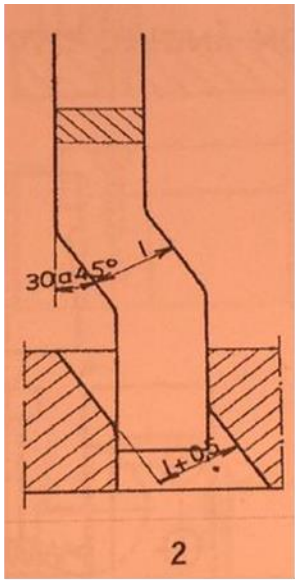

1) Rigid cam of simple effect (1 movement)
2) Cam of double effect (2 movements)
3) Profiled cam of double effect (2 movements)
4) Cam of column type of double effect (2 movements)

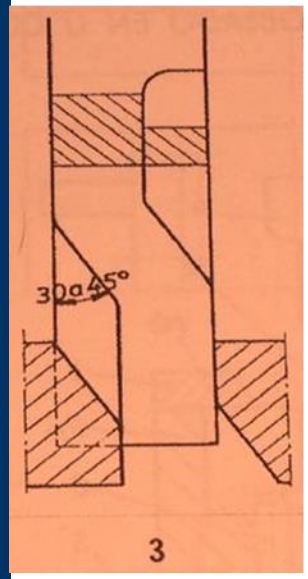

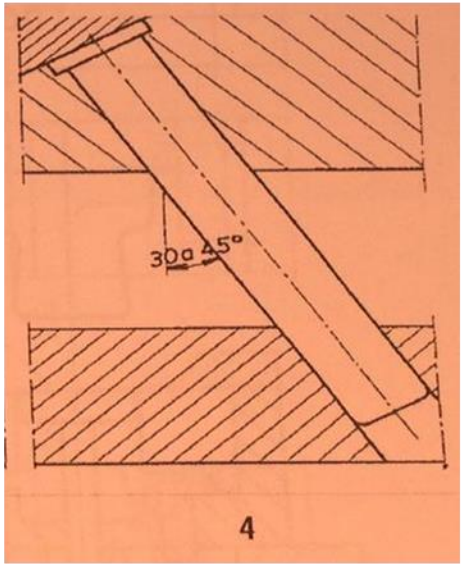

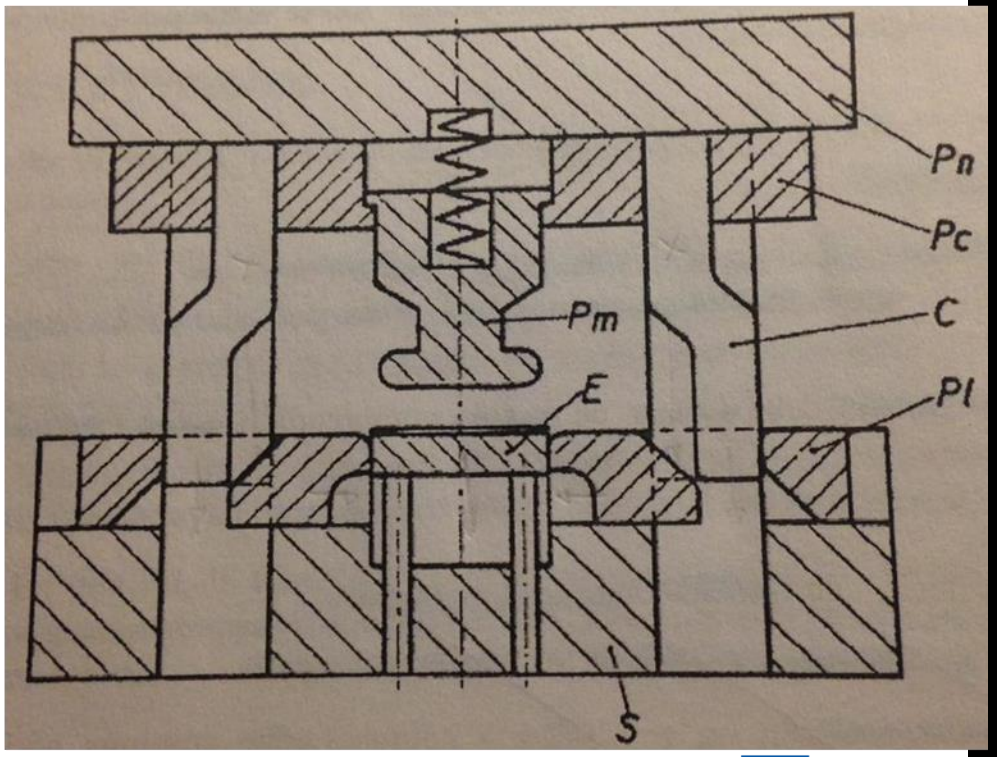

FORM

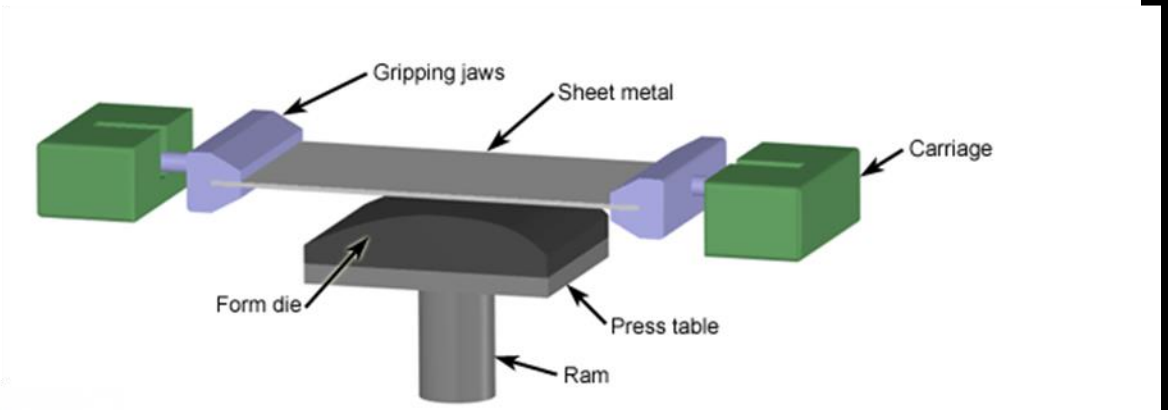
Gripping jaws
Sheet metal
Carriage
Form die
Press table
Ram

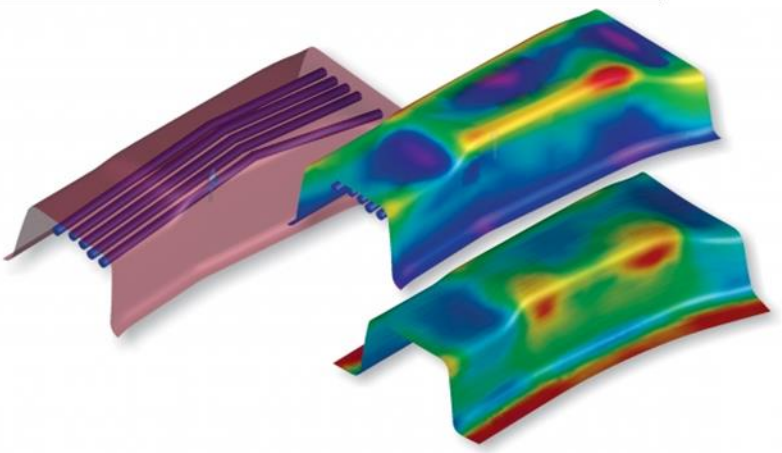

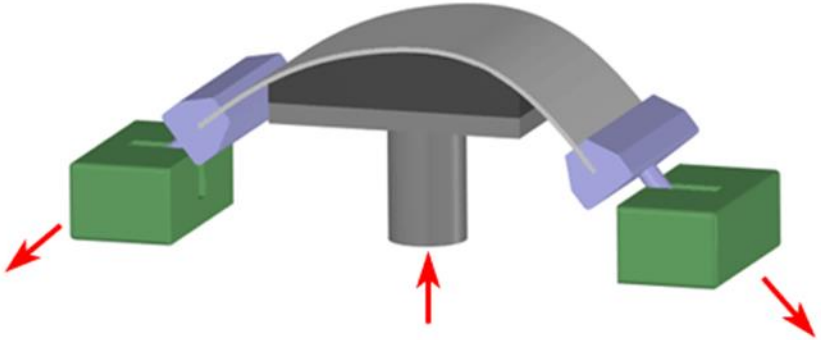

HOT / COLD STAMPING

STAMPING	HOT	COLD
Temperature	Not less than 840º	Ambient temperture

Different requierements (depending on the part of the car)

VIDEO

Hot stamping: reinforcement pieces of cars.
- Safety
- Weigth
- Expensive
- Finish surface
- Frequency.

Cold stamping: external parts of cars.
- Frequency
- Cheapier
- Not change properties
- Finish surface
- Not so safety

UPenAUTO : 2017-1-ES01-KA203-03858 Erasmus+

PRINCIPLES OF THE OPERATION

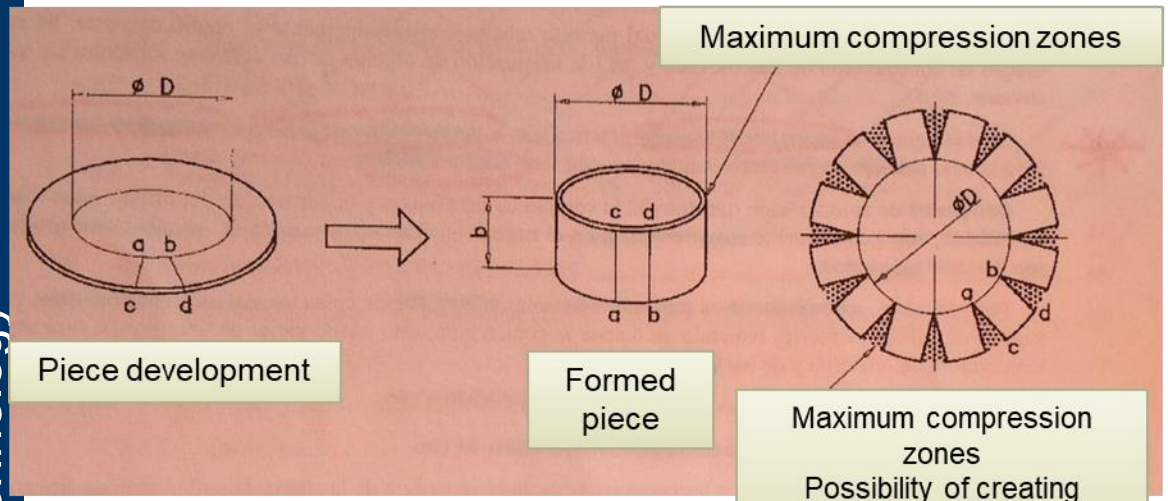

In order to avoid the wrinkles → apply a pad force → not too much, let the flat flow

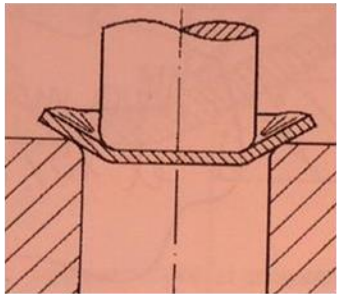

1) Begin the wrinkles

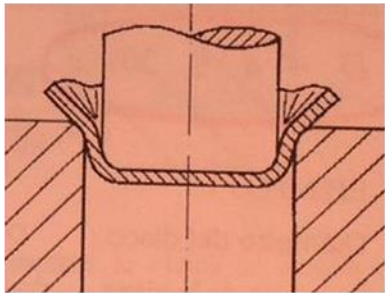

2) Accentuate wrinkles

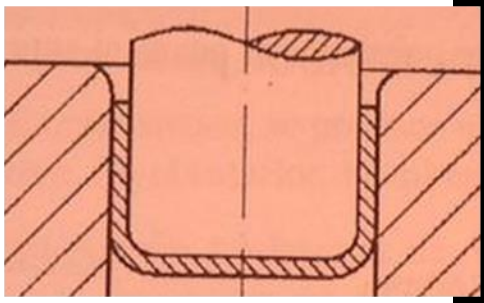

3) Dissapear wrinkles

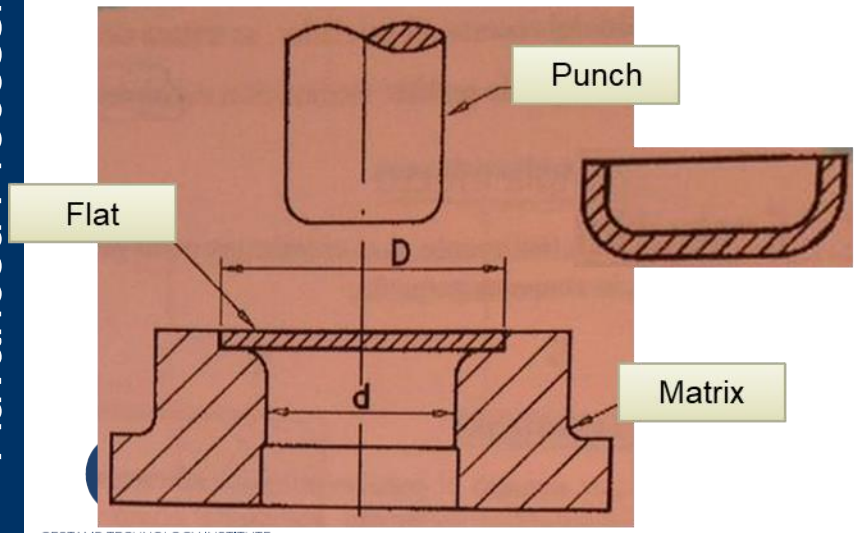

UPenAUTO : 2017-1-ES01-KA203-03858 Erasmus+

SIMPLE EFFECT

P: forming punch with the piece form
M: formig punch with a hole to allow the punch pass

1º First contact punch-flat.
2º Appear wrinkles in BD zone.
3º AF zone has constant thick (straight part)
4º FD zone has wrinkles that must disappear while the piece is introducing in the matrix.

Need pad or not?

- $\frac{d}{D} \geq 0.55$ → Don´t need
- $D - d \leq 20 \cdot \text{thick}$ → Don´t need

EXAMPLE 1:
Diameter of the disc (D=500mm)
Diameter of the piece (d=482mm)
Heigth of the piece aprox. (h=9mm)
Thick = 1mm

EXAMPLE 2:
Diameter of the disc (D=360mm)
Diameter of the piece (d=290mm)
Heigth of the piece aprox. (h=35mm)
Thick = 3mm

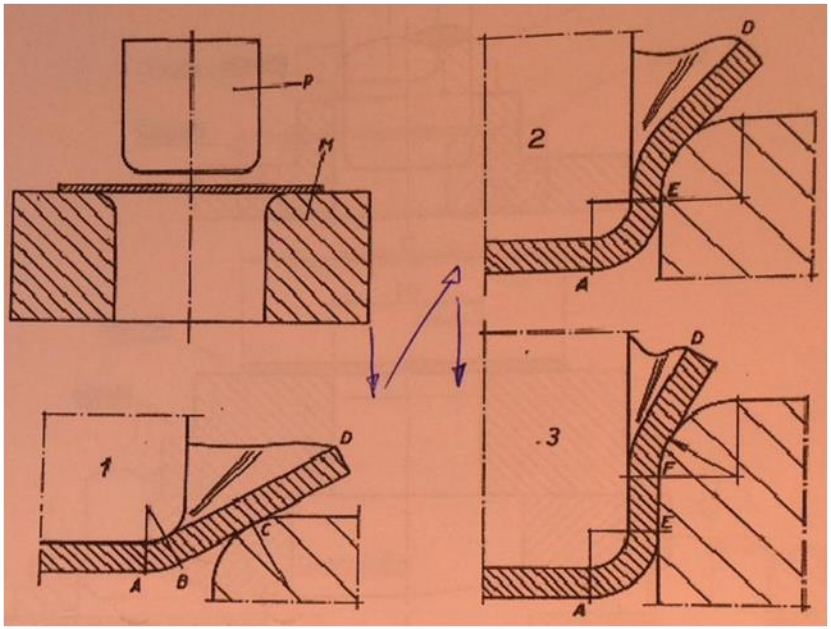

Important!!

Impossible return to the original form after the forming due to the rolling.

DOUBLE EFFECT

Punch: forming punch with the piece form.
Matrix: formig punch with a hole to allow the punch pass.
Pad: to make pressure in the flat (avoid wrinkles) but letting the flat flows.

1º Put the material to form.
2º Advance pad and punch, making the first contact with the flat.
3º Punch deform the flat while pad let it flows.
4º Both move away, at the time that the ejector extract the formed piece

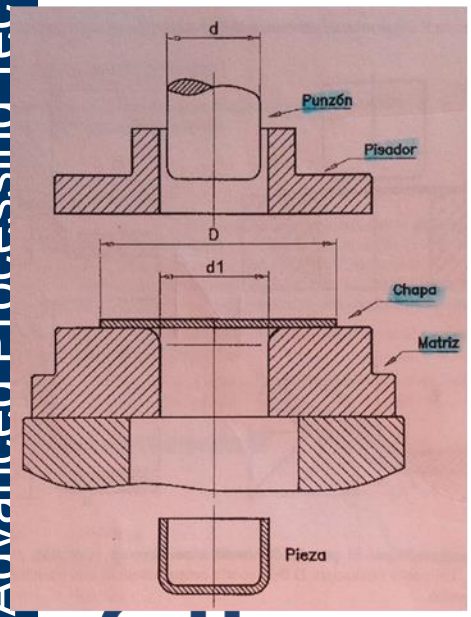

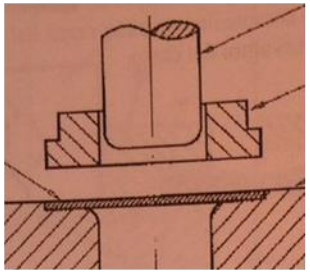

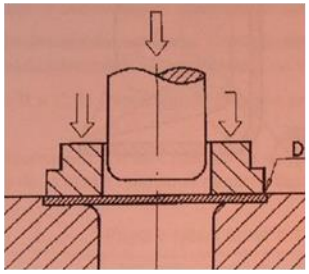

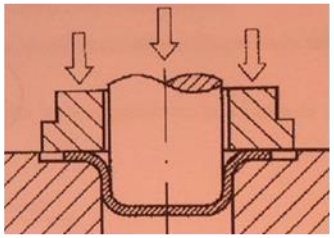

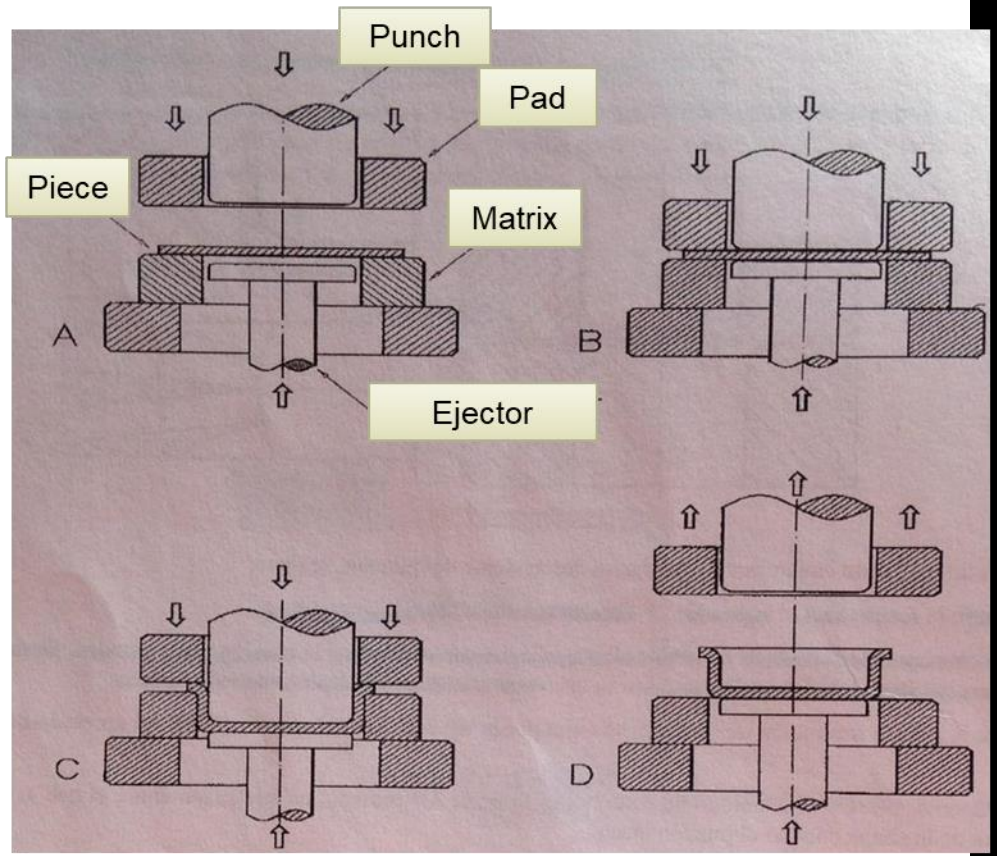

TRIPLE EFFECT

- Doble effect + pneumatic / hydraulic cushion (independent).
- For pieces with big sizes or requiere huge pad effort.

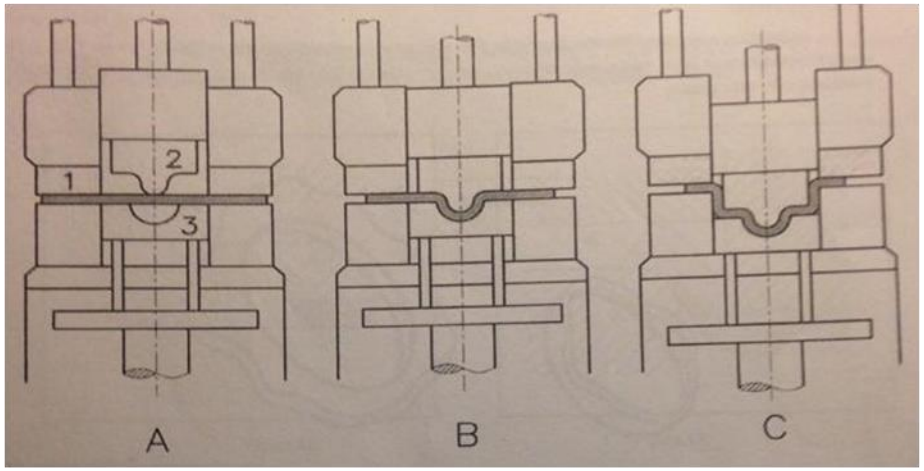

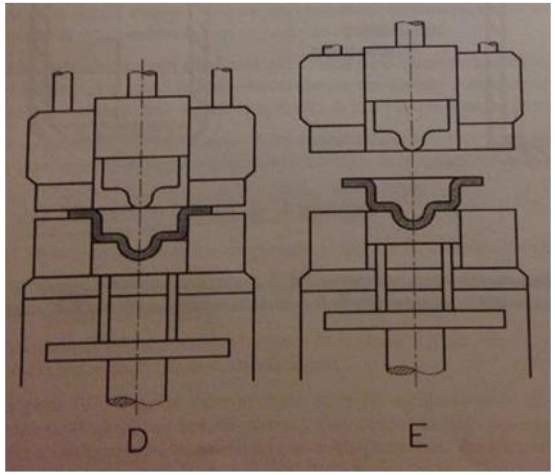

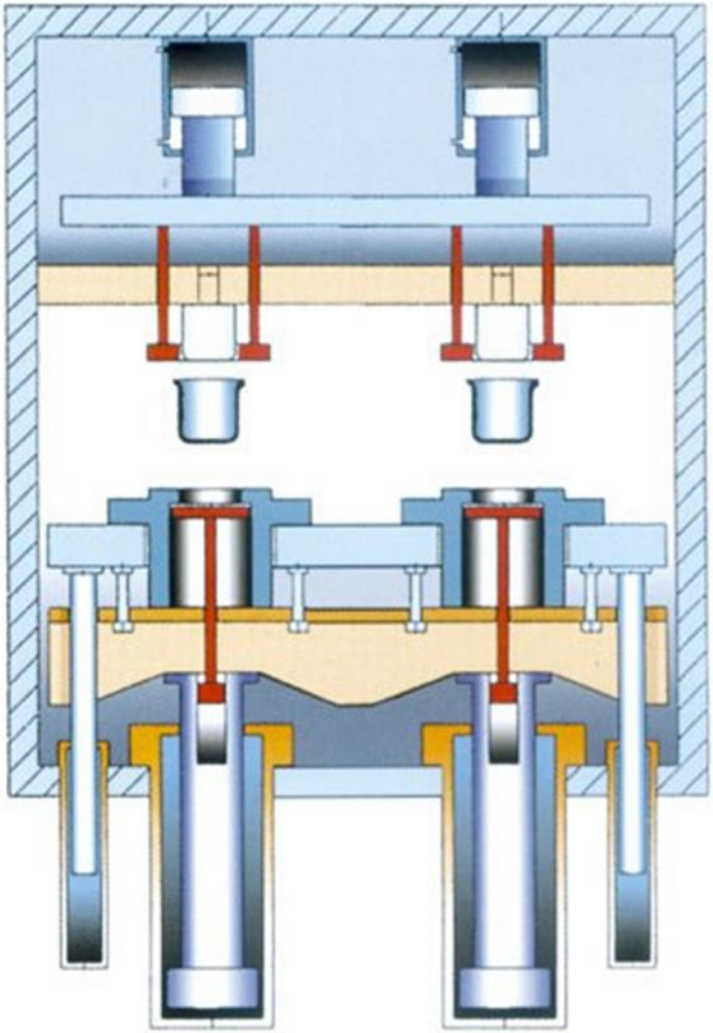

WHAT HAPPEND IN THE STAMPING?

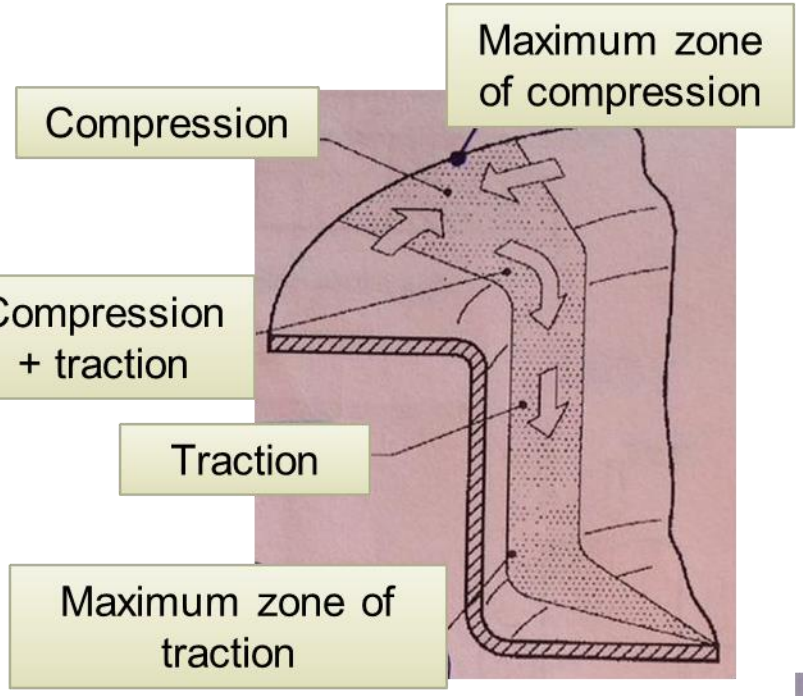

$$P_{MAXstamping} = \frac{P_{cut}}{2}$$

$$P_{MAXpad} = \frac{4}{10} \cdot P_{cut}$$

- In BC no wrinkles → suitable pressure of the pad.
- In AB → thick lose due to the impact of the punch.

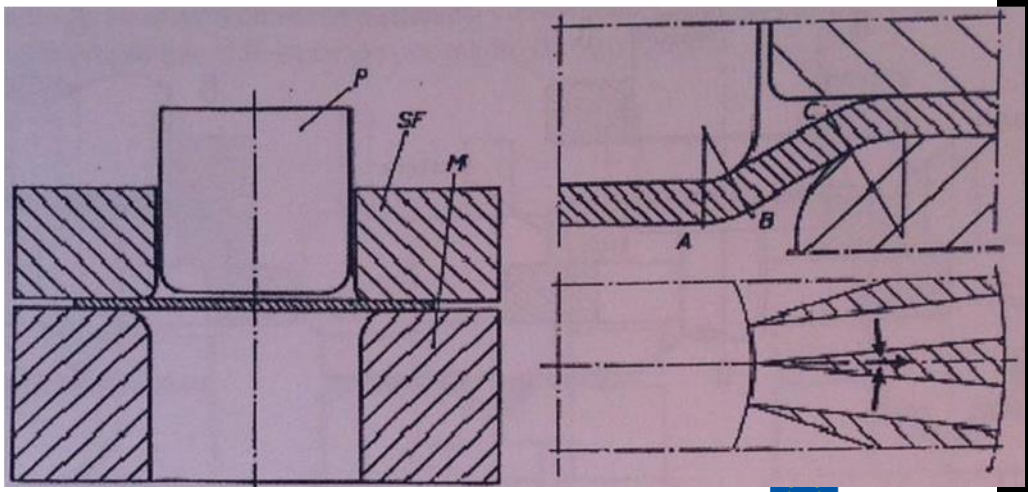

FINISH SURFACE AND FORMING VELOCITIES

Forming doesn´t make uniformly
→ Expect excess material

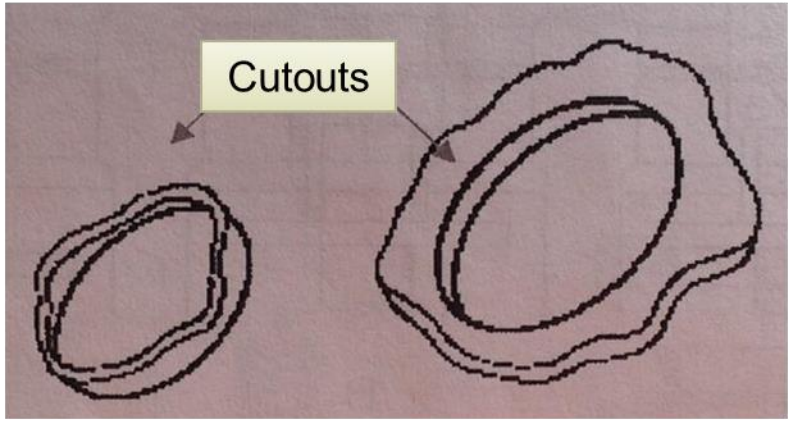

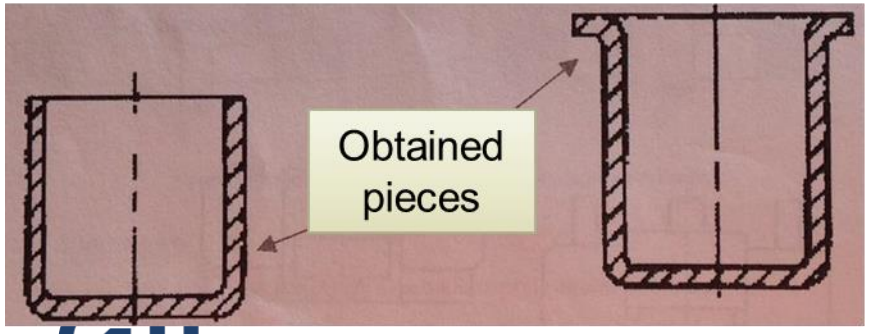

Different velocities in hot and cold stamping

Depending on…

- Material
  - Zinc and stainless steels (200mm/s)
  - Carbon steels (280 mm/s)
  - Aluminium (500mm/s)
  - Brass (750 mm/s)
- Formula:

$$V = 33{,}3 \cdot \left(1 + \frac{d}{D} \cdot \sqrt{D - d}\right) \quad \text{(mm/s)}$$

where,
D: diameter (mm) of the material disc.
d: diameter (mm) of the first forming.

UPenAUTO : 2017-1-ES01-KA203-03858

FORMING RADIUS

Important!!

1- Punch and matrix with radius in the edges, otherwise piece breaks.
2- Design the correct radius in order not to creat wrinkles in the piece.

$Radius_{punch}$ = from 3 to 5 · thick
$Radius_{matrix}$ = among 3 and 8 times thick

OK

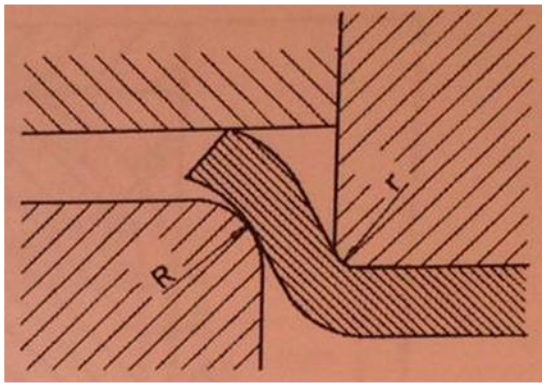

NO OK

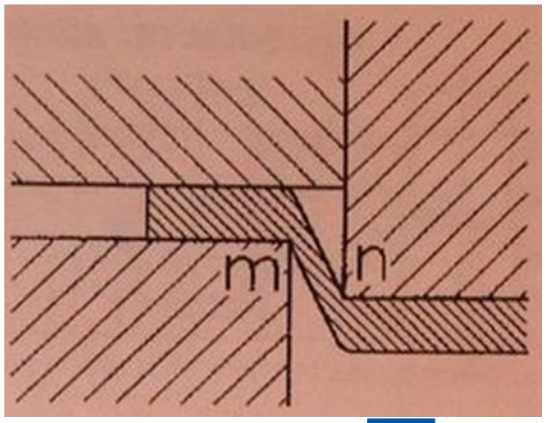

As normal…

- Thick < 1mm → R = from 6 to 8 · thick
- 1 mm < Thick < 3 mm → R = from 4 to 6 · thick
- 3 mm < Thick < 4 mm → R = from 2 to 4 · thick

UPenAUTO : 2017-1-ES01-KA203-03858

GAP

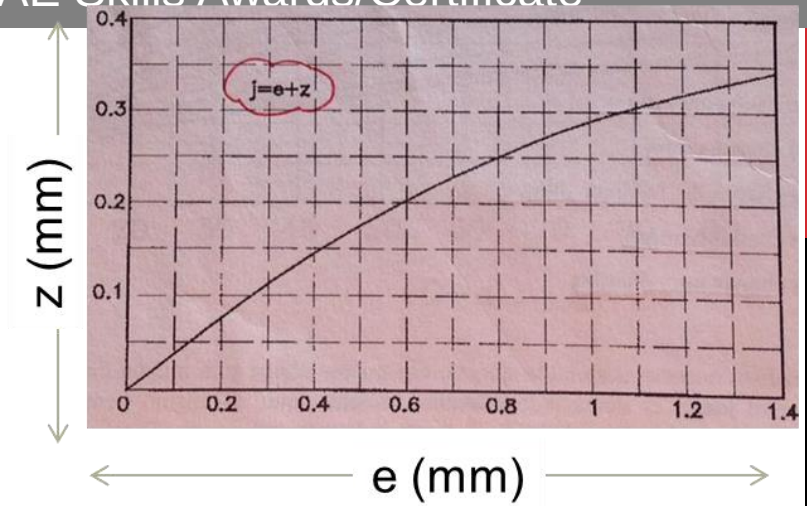

Too large gap

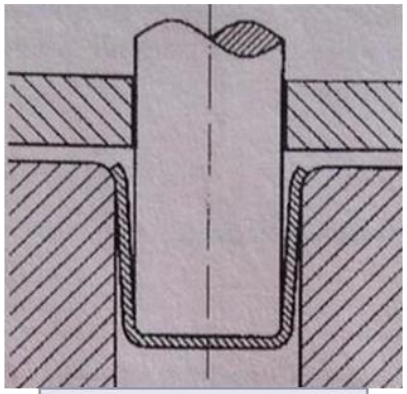

Profile deformation

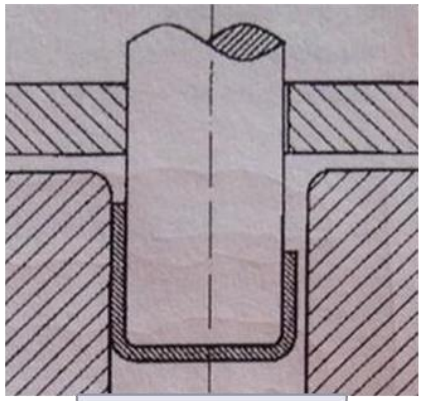

Punch deviation

Too short gap

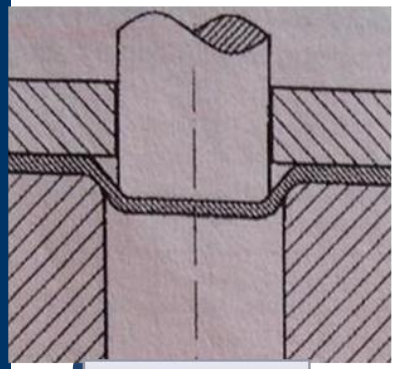

Shear

- ***Brass, Aluminium, Silver and Copper***
  j = from 1.1 to 1.15 · thick
- ***Steel and Iron***
  j = 1.2 · thick
- ***Rectangular stamping (straight zones)***
  j = 1.1 · thick
- ***Rectangular stamping (angular zones)***
  j = 1.2 · thick

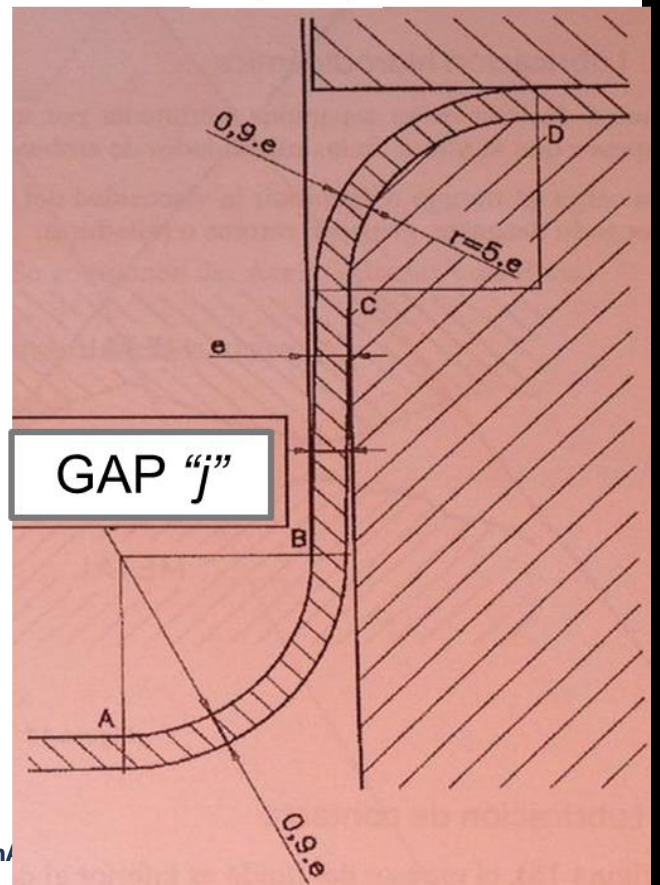

SURFACE EXERCISE

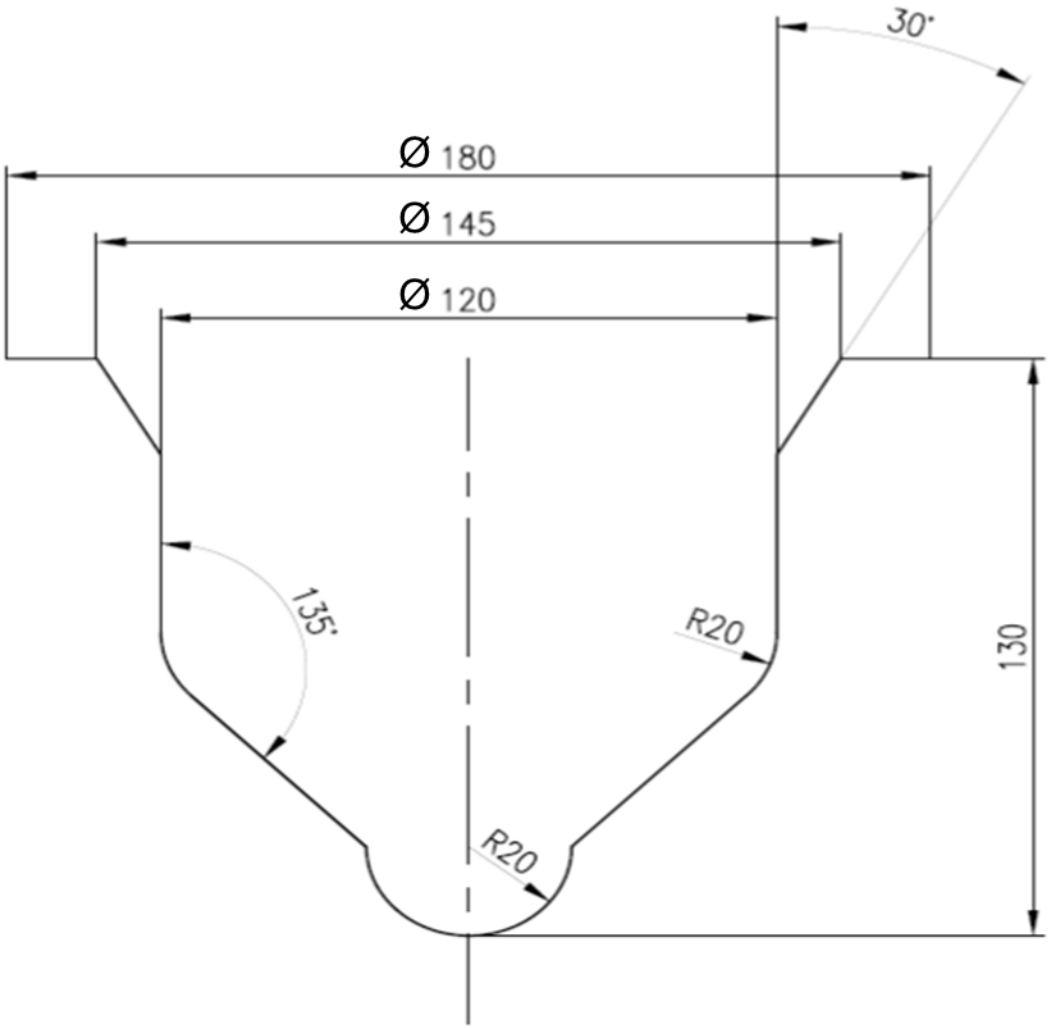

UPenAUTO : 2017-1-ES01-KA203-03858

Advanced Processing Technology (40 h)

UPenAUTO : 2017-1-ES01-KA203-03858

Erasmus+

UPenAUTO: UPSKILLED ENGINEERING PROFILES FOR THE AUTOMOTIVE SECTOR AND UPTAKE OF ALTERNATE SCHEME IN EUROPE´S HIGHER EDUCATION.

Gestamp

GTI
GESTAMP TECHNOLOGY INSTITUTE

FABRIKAZIOAREN ZENTRO AURRERATUA
CENTRO AVANZADO DE FABRICACIÓN

somorrostro
centro de formación / irakas-gunea

UNIVERSITATEA POLITEHNICA

Types of presses

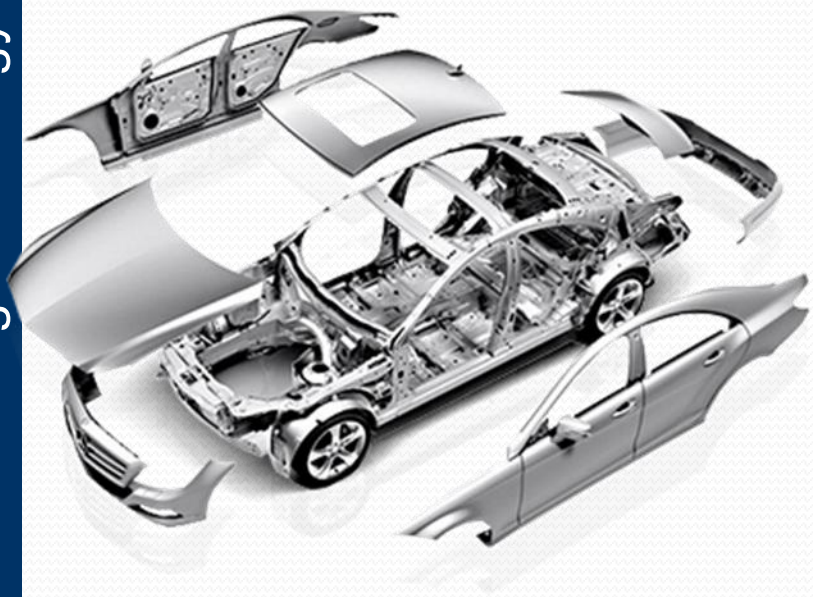

Advanced Processing Technology

Index

- *OP 10, 20, 30… and transfer / tandem*
- *Types of lines*
  - *Tools per plate*
  - *Cycles´ times*
  - *Work´s velocities*
  - *Cushions*
- *Gestamp´s lines (ML-SL)*

OP 10, 20, 30… and transfer / tandem

- OP… → distinguish HOT / COLD
- Simple
- Transfer
- Tandem

• *TOOLS PER PLATE*

LOIRE

- 1 tool per plate (2600 x 800mm)

Seek to ensure good contact between the piece and tool

(Be carefull with more than one tool due to the diferent heights)

- Presses with 1 plate (SL)

2 plates (ML)
- Hydraulics
- Work with
1 or 2

UPenAUTO : 2017-1-ES01-KA203-03858 Erasmus+

CYCLES' TIMES

- LOAD-UNLOAD SYSTEMS
- In order to give the times of the cycles → diferent systems of load-unload systems in press

1.ROBOTS

2.FEEDER

3.TRANSFER-FEEDER

CUSHIONS

- HOT STAMPING → 1 row of cylinders per each plate

Individual cylinders (use only as much as the tool requieres → the rest, no pins)

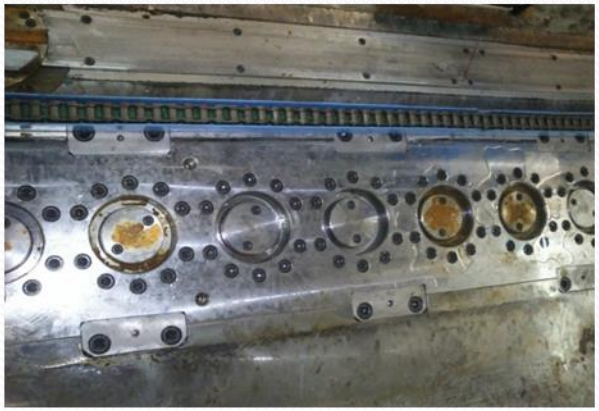

- In order to give the times of the cycles → diferent systems of loading-unloading systems in press

• GESTAMP´S LINES (ML-SL) hot stamping

- MEDIUM LINE (ML)

VIDEO 1 VIDEO 2

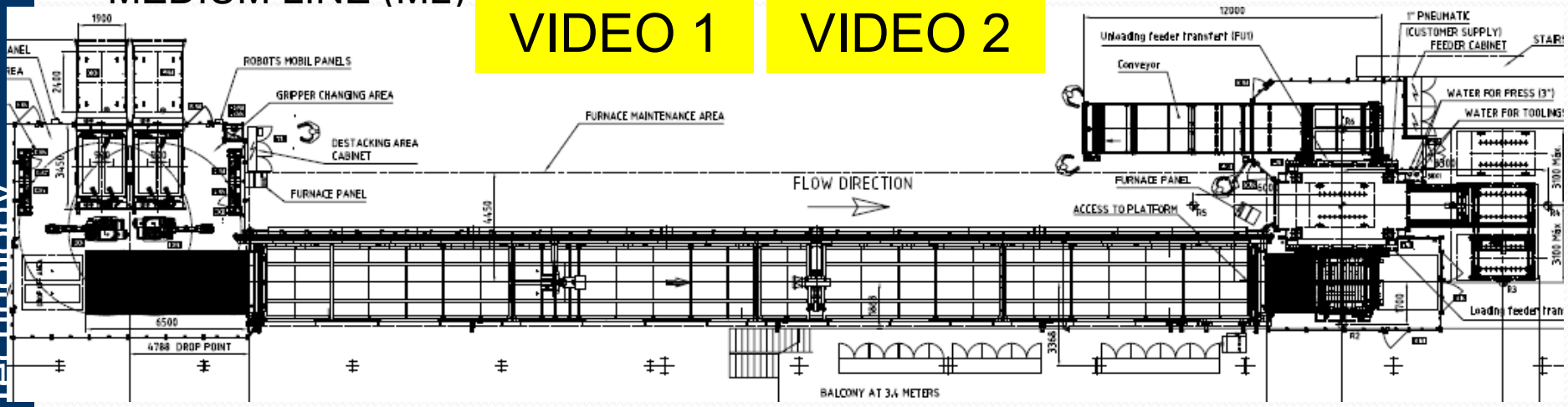

- SMALL LINE (SL)

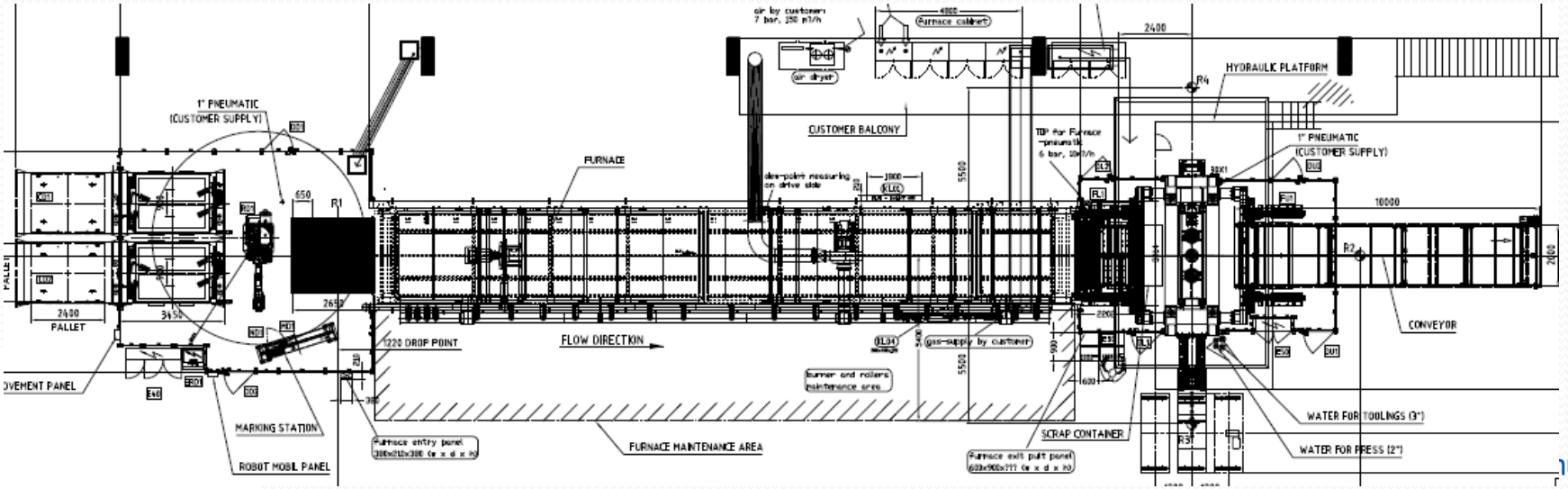

GESTAMP´S LINES (ML-SL) hot stamping

TECHNOLOGIES

- **MAIN ZONES:** LOADING ZONE

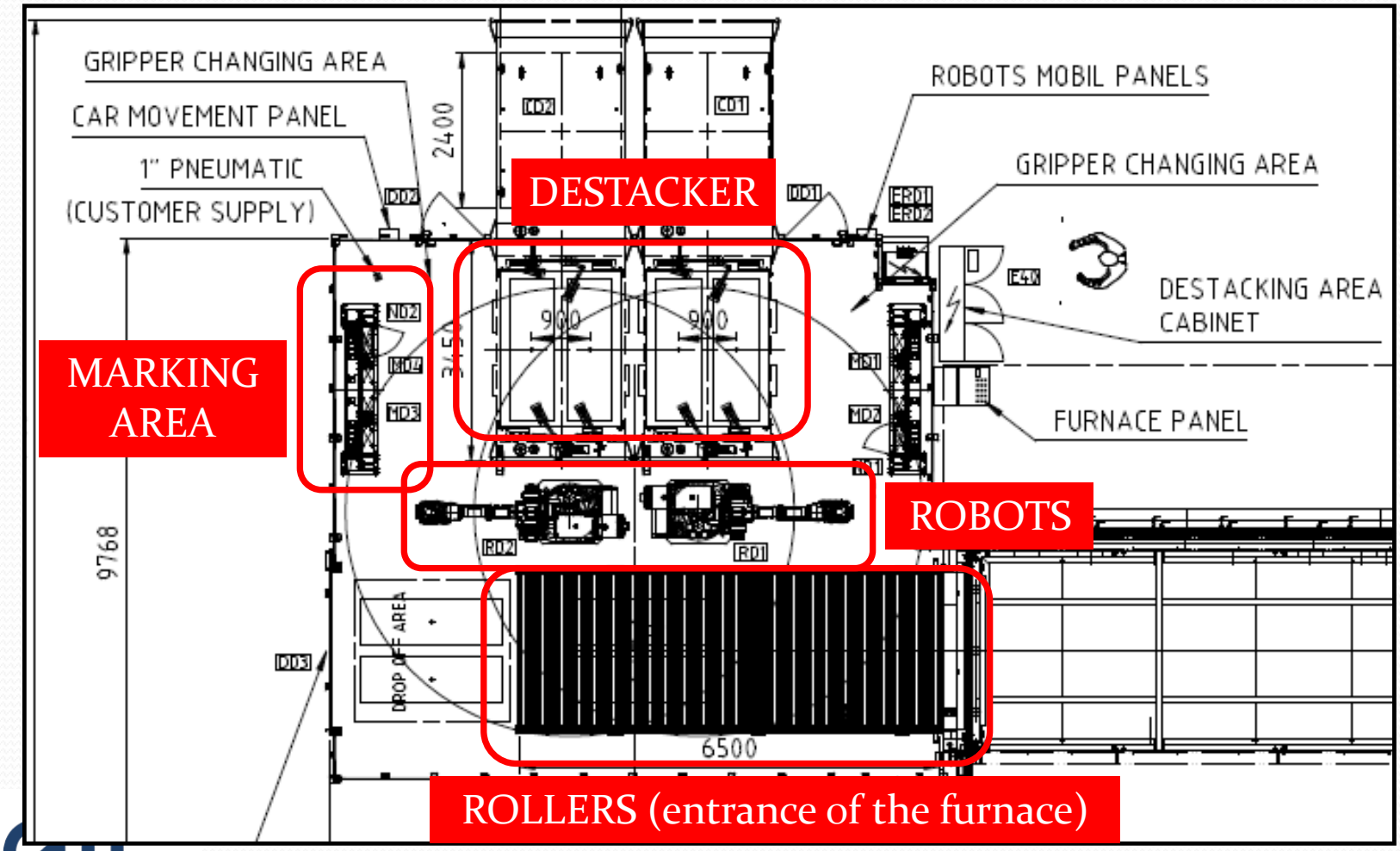

GESTAMP´S LINES (ML-SL) hot stamping

- **MAIN ZONES:** LOAD ZONE

- 2 tables

- 2 robots

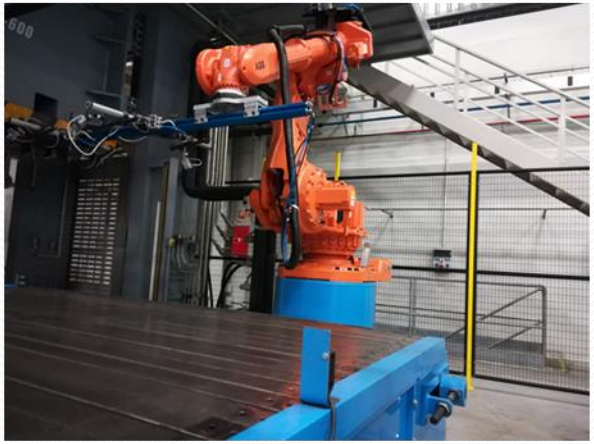

- 2 marking areas with pneumatic impact.
  - In the future, pneumatic to bring closer + hydraulic for work (reduce the noise). Besides, measure of double blanks.

UPenAUTO : 2017-1-ES01-KA203-03858 Erasmus+

GESTAMP´S LINES (ML-SL) hot stamping

- **MAIN ZONES:** END OF FURNACE – PRESS LOAD

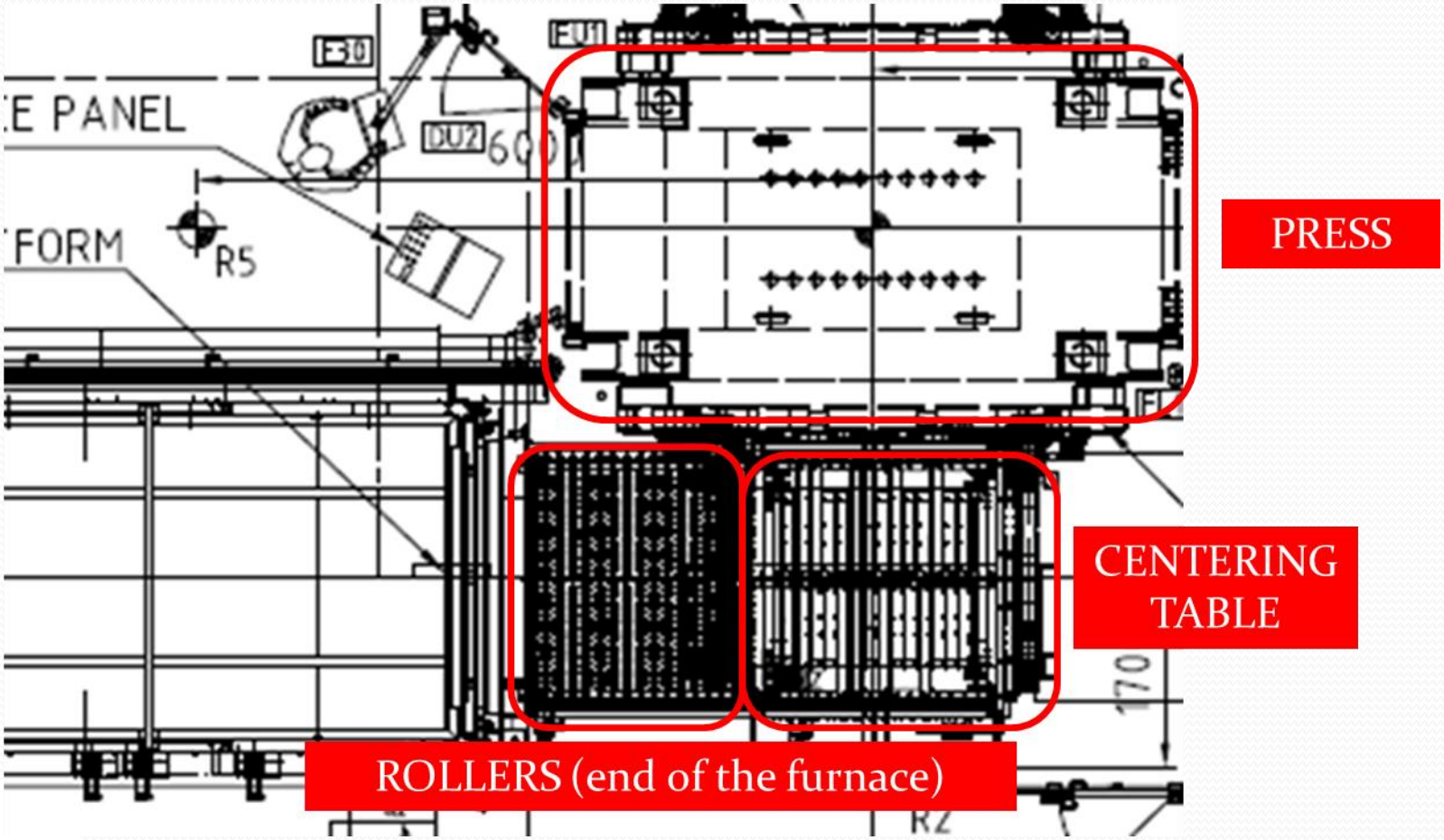

GESTAMP´S LINES (ML-SL) hot stamping

- **MAIN ZONES:** END OF FURNACE – PRESS LOAD

- Rollers´ table (end of the furnace)

- Centering table
  - Flow direction ML/SL
  - Centerings pins and stop block
  - Elevation

UPenAUTO : 2017-1-ES01-KA203-03858 Erasmus+

GESTAMP´S LINES (ML-SL) hot stamping

- **MAIN ZONES:** UNLOAD PRESS

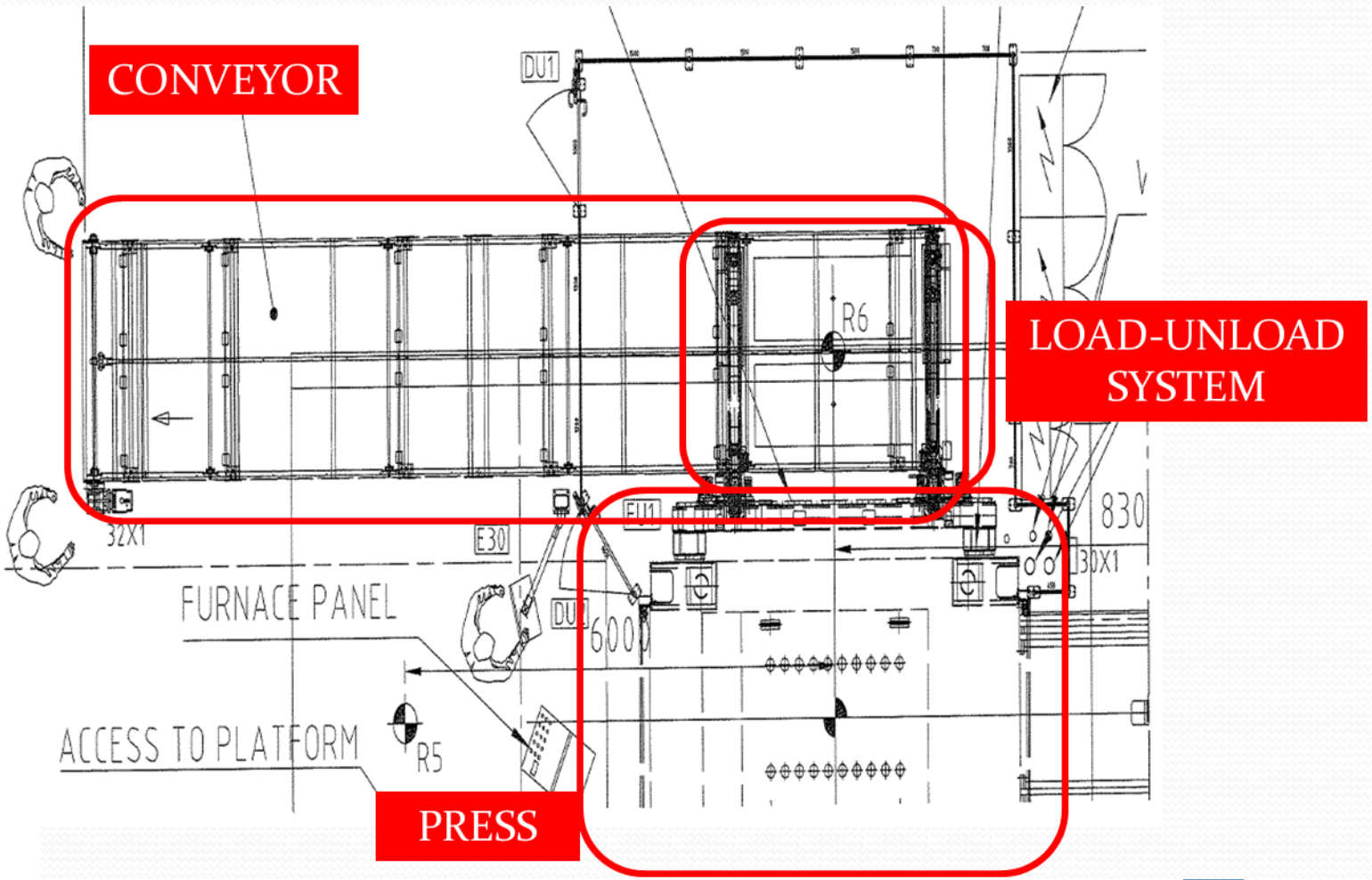

UPenAUTO : 2017-1-ES01-KA203-03858

GESTAMP´S LINES (ML-SL) hot stamping

- **MAIN ZONES:** PRESS

- Characteristics per plate:
  - 6000 kN
  - 3 cylinders: 1 central simple effect + 2 in sides of double effect
  - Velocities / forces, P maintenance, t (periods)
  - Aperture 2000 mm
  - Stroke 1200 mm

GESTAMP´S LINES (ML-SL) hot stamping

MAIN ZONES: PRESS

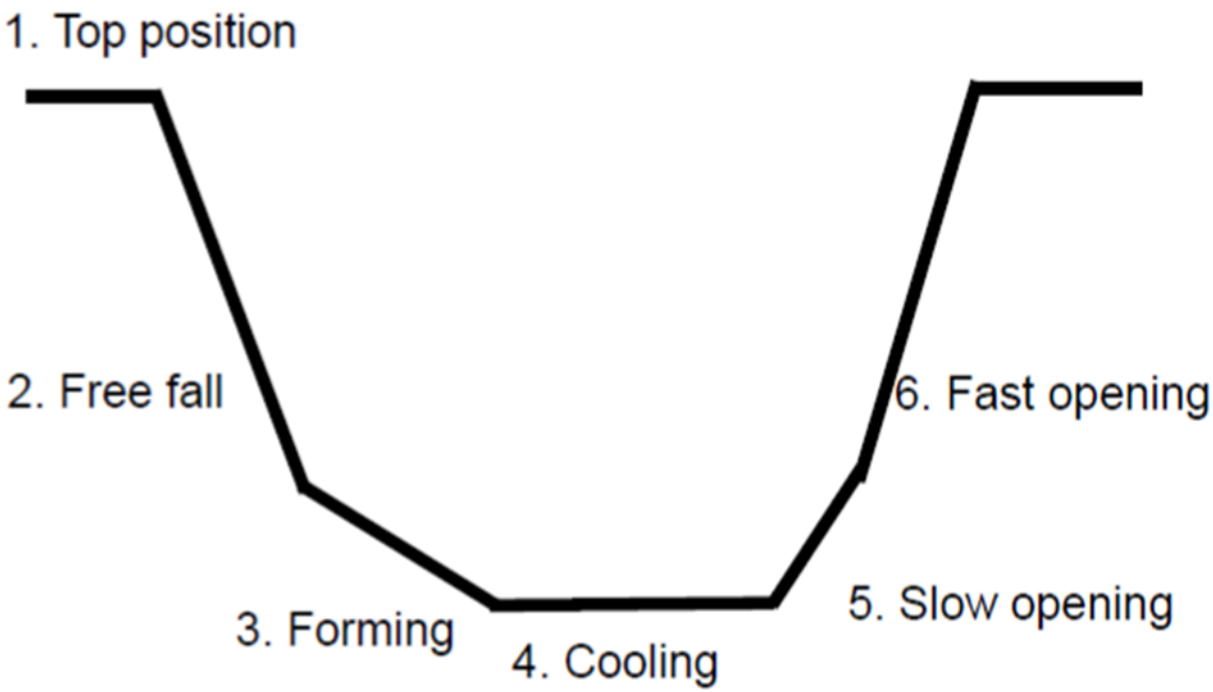

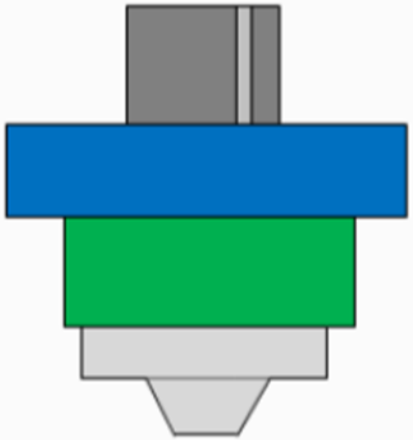

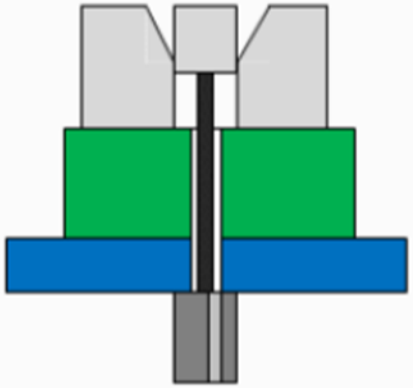

Automotive Engineering CAD, CAE, CAM

Practical Exercise / test

UPenAUTO : 2017-1-ES01-KA203-03858

Erasmus+

NAME:

1.- Test. (4 points)

1.- What measure is accepted with this tolerance? $25^{-0.025}_{-0.050}$

a.- 25.000
b.- 24.980
c.- 24.990
d.- None of them

2.- If we want to obtain a disc of a flat…:

a.- The gap (tolerance) must be in the punch.
b.- The matrix must have negative tolerance.
c.- Punch and matrix have tolerance.
d.- It does not matter where the tolerance is.

3.- In hot stamping… :

a.- the refrigeration is crucial to obtain the necessary requierements.
b.- you can avoid the refrigeration because sometimes cause problems.
c.- the refrigeration is made depending on the temperature of the press.
d.- the refrigeration is not important, because the stamping is done with an ambient temperature presstrim.

4.- What type of adjust is…. ***75 J7/h6***

a.- with gap (clearance).
b.- indeterminate.
c.- with interference fit.
d.- impossible.

5.- Simplifying, the order in a process is the following:

a.- Budget, design, manufacturing, stamping, assembly the die.
b.- Design, manufacturing, budget, stamping, assembly the die.
c.- Budget, design, stamping, manufacturing, assembly the die.
d.- Budget, design, manufacturing, assembly the die, stamping.

6.- In bending radius:

a.- Inside fibres are traction fibres.
b.- Outside fibres are compression fibres.
c.- The fibres does not suffer any changes.
d.- The thick has relation with the neutral fibre in the curvature.

7.- The order in the hot stamping line is… :

a.- Conveyor, furnace, press, destacker, laser.
b.- Furnace, press, conveyor, laser, destacker.
c.- Destacker, furnace, press, conveyor, laser.
d.- Destacker, furnace, conveyor, press, laser.

8.- What is spring back?

a.- It appears when the punch is wear away.
b.- Characteristic of the material that tends to obtain the previous form.
c.- The cutouts after the cutting operation.
d.- Only appears when the thick is more than 4mm.

PLUS QUESTION!! (+0,5 points if it´s correct)

*** the temperature when you introduce the presstrim in the die in hot stamping is …

a.- More than 1000 degrees.
b.- Not less than 840 degrees.
c.- Among 500 and 700 degrees.
d.- Sometimes among 500 and 700, but normally at 840 degrees.

NAME:

2.- Obtain the development of the following piece. (2 points)

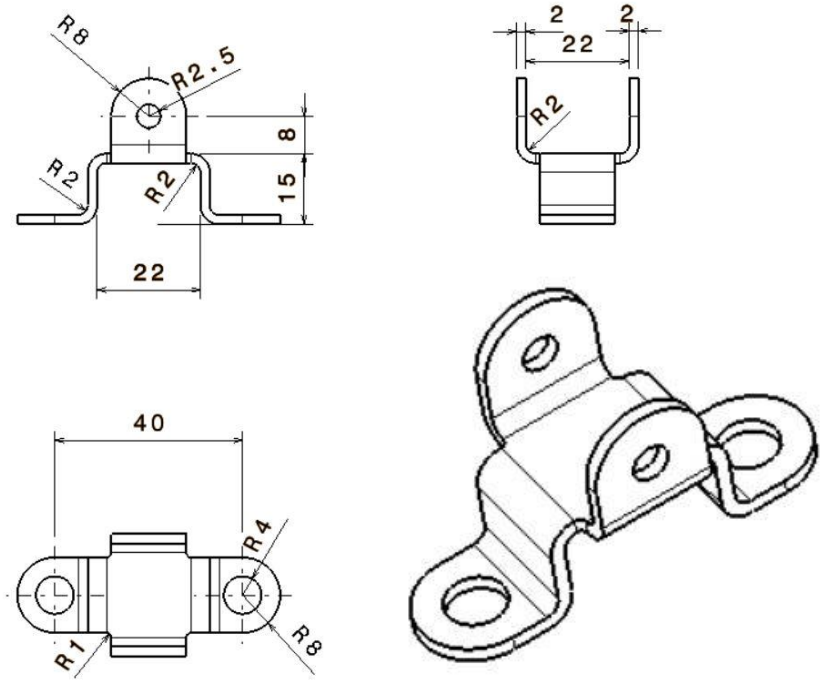

3.- Draw a cutting simple effect die and indicate the main parts of it. (1,5 points)

UPenAUTO : 2017-1-ES01-KA203-03858