Basic design with CATIA V5 (60 h)

UPenAUTO : 2017-1-ES01-KA203-03858

Erasmus+

UPenAUTO: UPSKILLED ENGINEERING PROFILES FOR THE AUTOMOTIVE SECTOR AND UPTAKE OF ALTERNATE SCHEME IN EUROPE´S HIGHER EDUCATION.

Gestamp

GTI
GESTAMP TECHNOLOGY INSTITUTE

FABRIKAZIOAREN ZENTRO AURRERATUA
CENTRO AVANZADO DE FABRICACIÓN

somorrostro
centro de formación / irakas-gunea

UNIVERSITATEA POLITEHNICA

Introduction to Catia

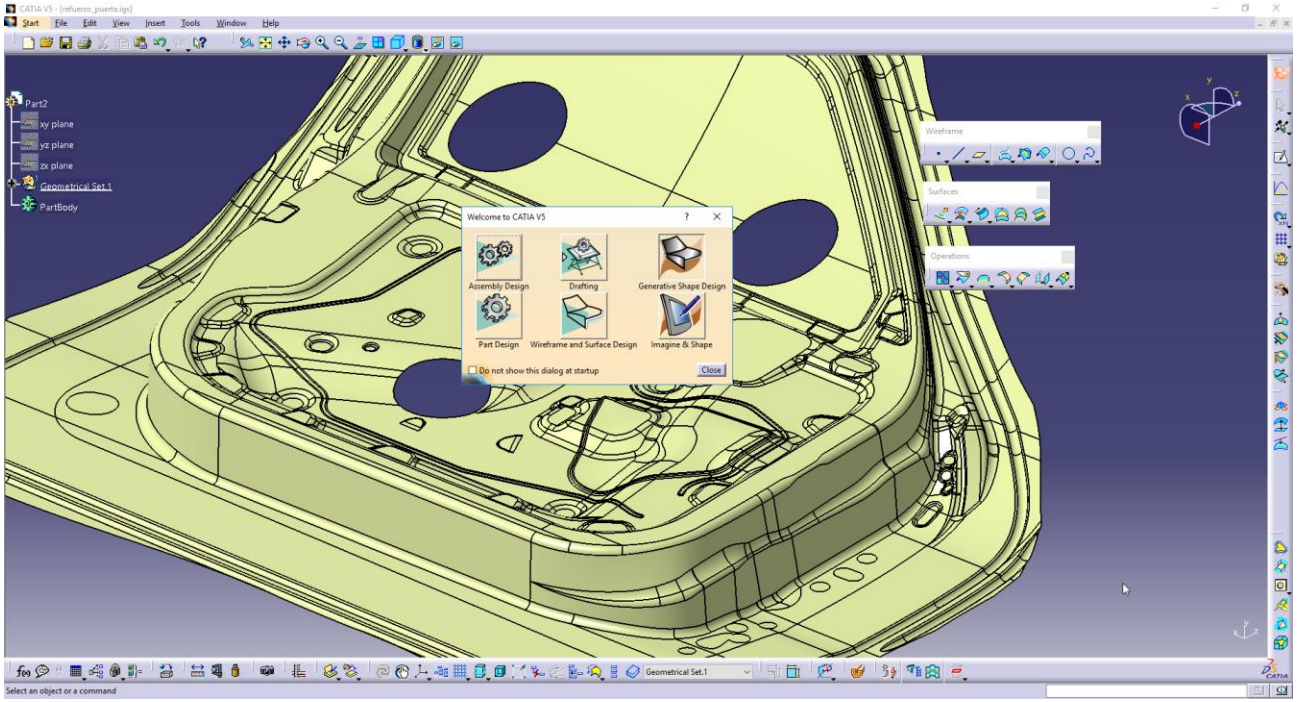

UPenAUTO : 2017-1-ES01-KA203-03858

The Workbench Concept

Each workbench contains a set of tools that is dedicated to perform a specific task. The following workbenches are the commonly used:

- **Part Design**: Design parts using a solid modeling approach
- **Sketcher**: Create 2D profiles with associated constraints, which is then used to create other 3D geometry.
- **Assembly Design**: Assemble parts together with constraints
- **Drafting**: Create drawings from parts or assemblies
- **Generative Shape Design**: Design parts using a surface modeling approach

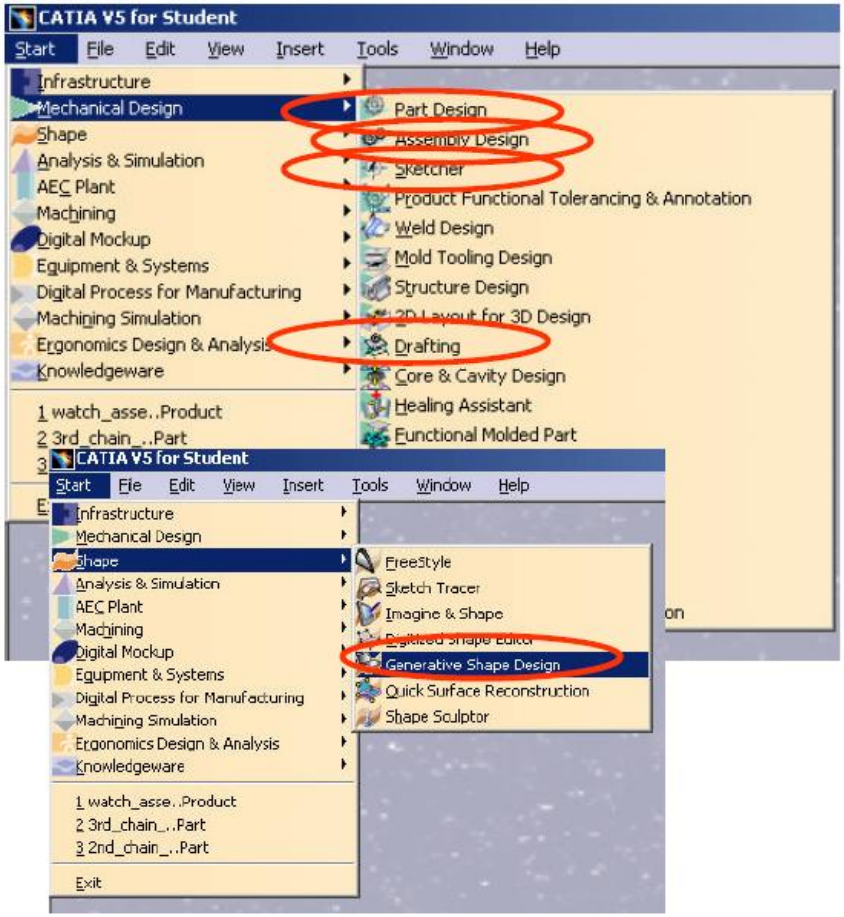

UPenAUTO : 2017-1-ES01-KA203-03858

User Interface

Below is the layout of the elements of the standard CATIA application.

A, Menu Commands

B. Specification Tree

C. Filename and extension of current document

D. Icon of the active workbench

E. Toolbars specific to the active workbench

F. Standard Toolbar

G. Compass

H. Geometry area

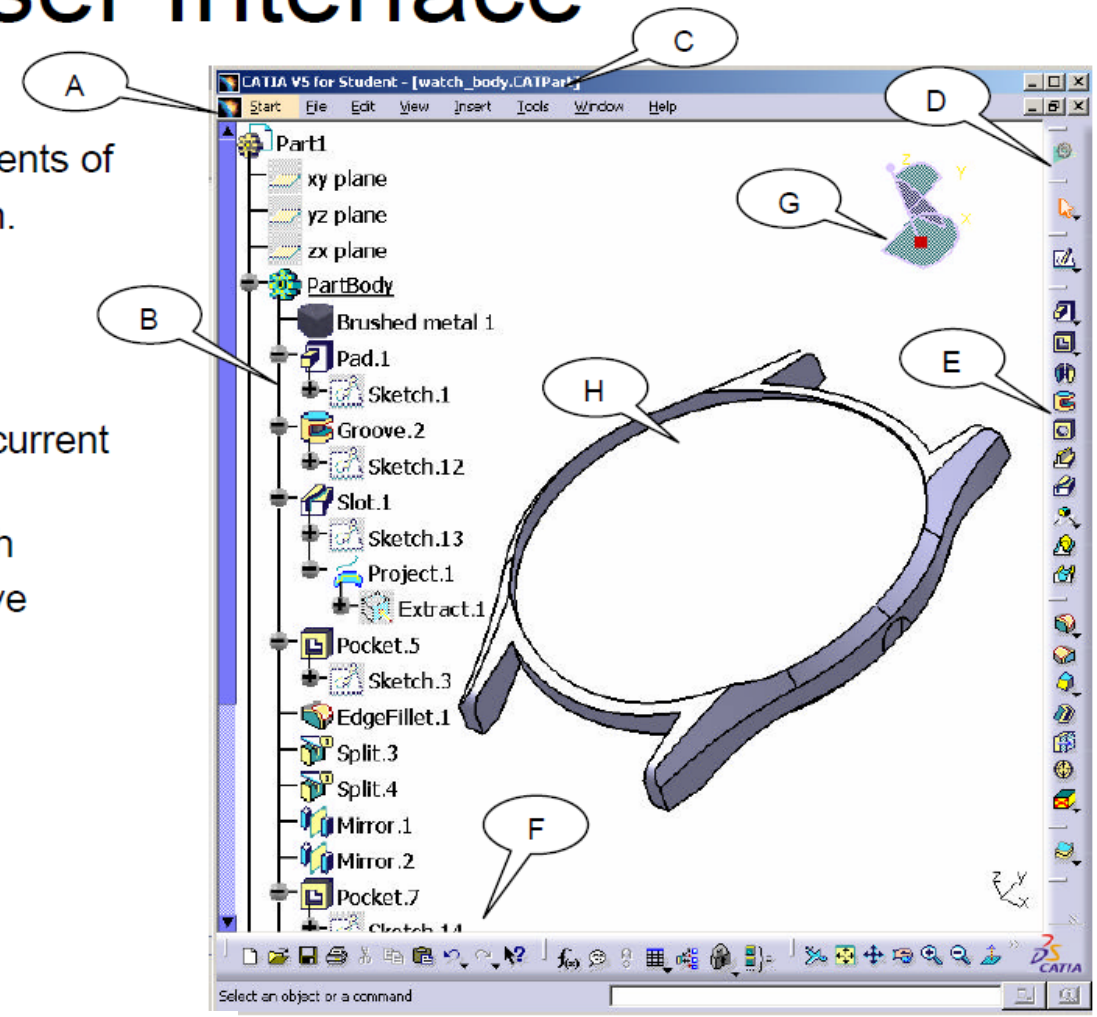

Type of Documents

The common documents are:

A, A part document (.CATPart)

B. An assembly document (.CATProduct)

C. A drawing document (.CATDrawing)

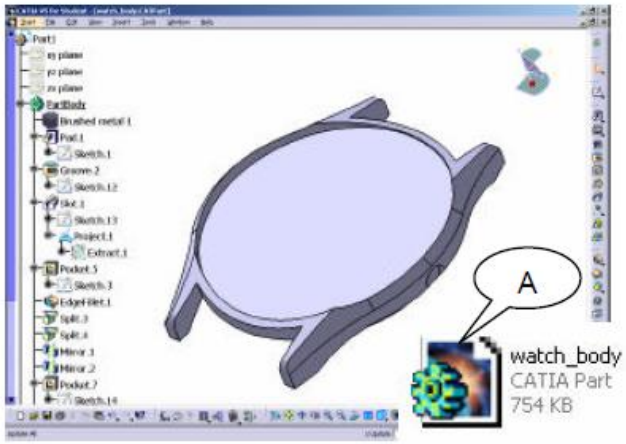

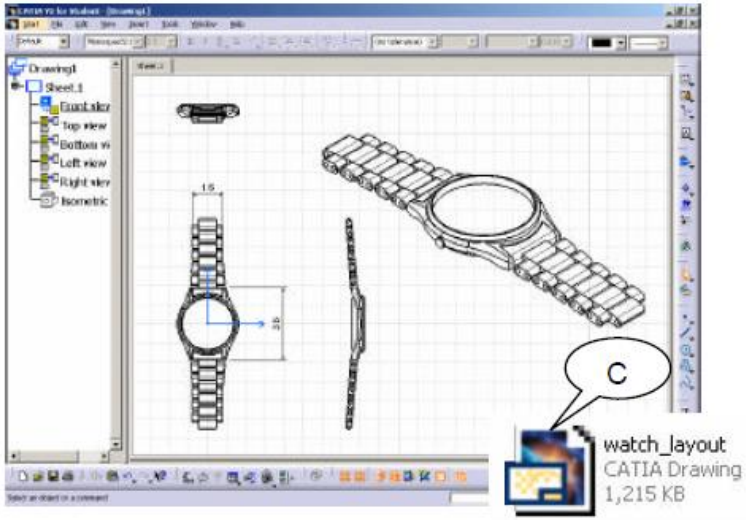

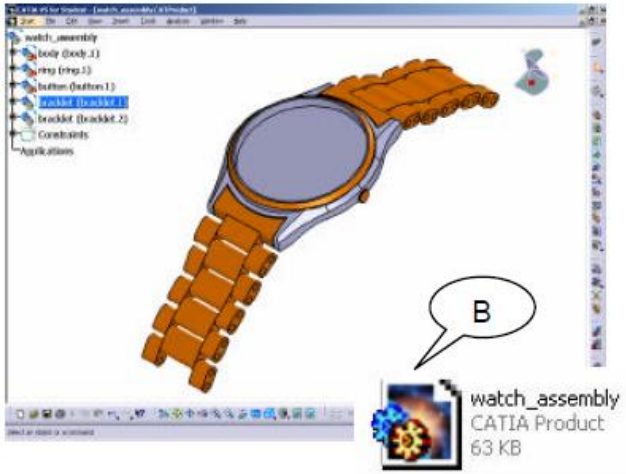

Display Settings

To improve the 3D surface accuracy,

Use the **Tools->Options...** Command, then open the tab page **Display->Performances**

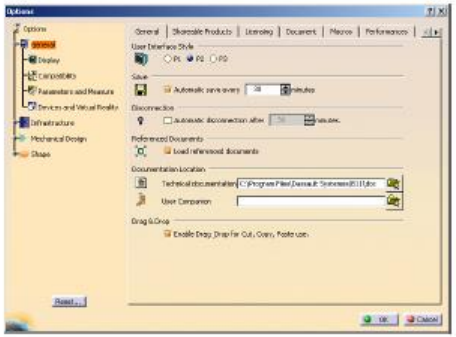

Then lower the **fixed sag value** to make the surface look smoother

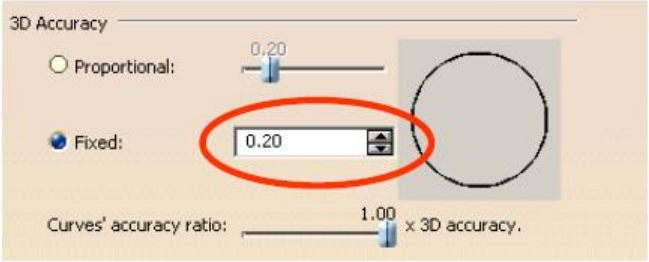

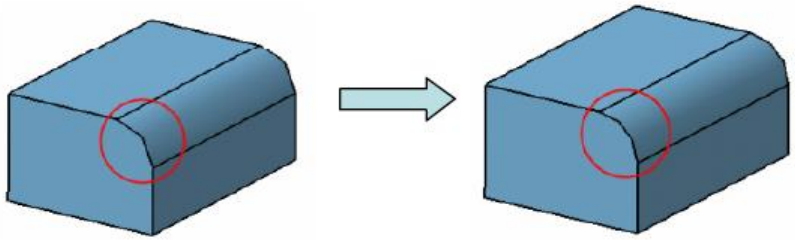

You can also change the background color on the tab page **Display->Visualization**

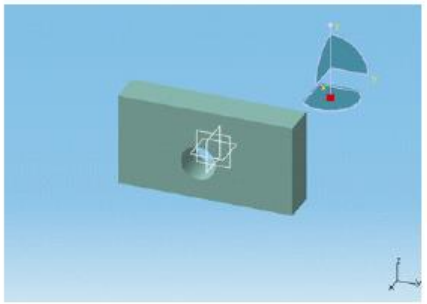

View & Hide Toolbars

- Select "**View > Toolbars**".

The list of current toolbars is displayed. Currently visible toolbars are indicated by a tick symbol to the left of the toolbar name.

In the list, click the toolbar you want to view or hide.

- You can detach toolbars from the application window border by dragging the double line to the left of the toolbar: you can drag the toolbar anywhere around the screen, then dock the toolbar in the same or in another location by dragging it onto the application window border

- To restore the original positions of the toolbars on the current workbench, select **"View>Customize>Toolbars>Restore position";**

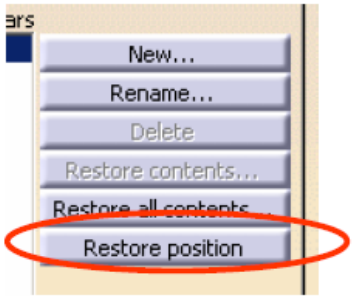

Change the view with the mouse

A. Panning enables you to move the model on a plane parallel to the screen. Click and hold the middle mouse button, then drag the mouse.

B. Rotating enables you to rotate the model around a point. Click and hold the middle mouse button and the right button, then drag the mouse.

C. Zooming enables you to increase or decrease the size of the model. Click and hold the middle button, then click ONCE and release the right button, then drag the mouse up or down.

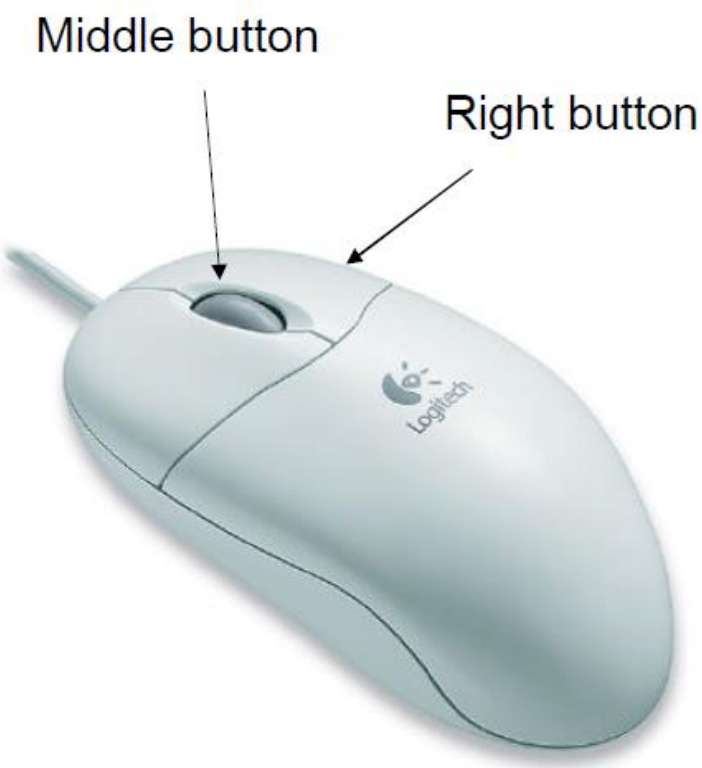

UPenAUTO : 2017-1-ES01-KA203-03858

Rendering Styles

A. Shading
B. Shading with Edges
C. Shading with Edges but without smooth edges
D. Shading with Edges with hidden edges
E. Shading with Material
F. Wireframe

More:- To change the color or the degree of transparency, right-click on the element

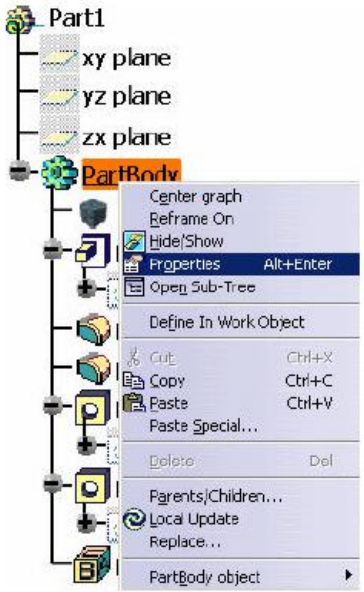

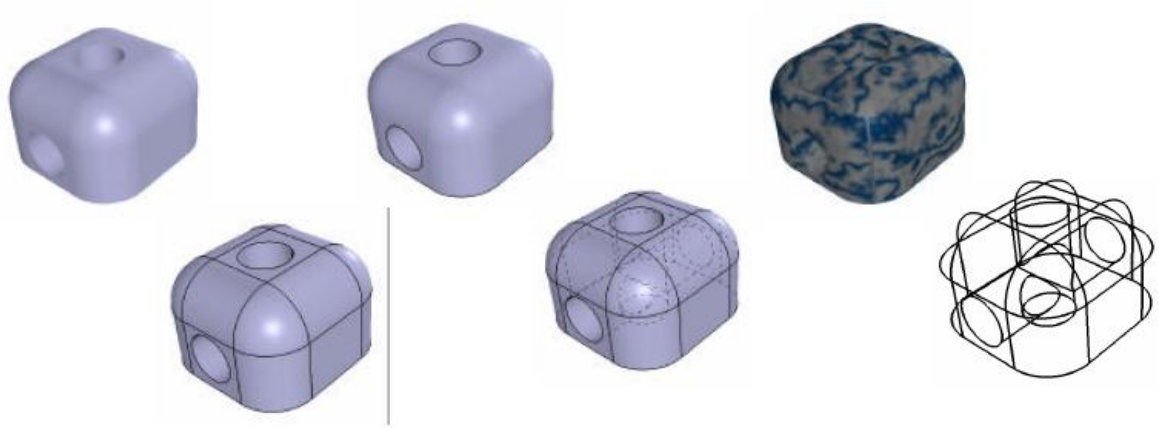

UPenAUTO : 2017-1-ES01-KA203-03858

Show & Hide

A. Hide/Show

(Hide an element by transferring it to the “No Show” space)

B. Swap visible space

(Swap the screen from “Show” to “No Show” or vice versa)

You can select any elements in the “No Show” space and transfer it back to the “Show” space by clicking the “Hide/Show” icon

For the hidden elements, their icons are shaded.

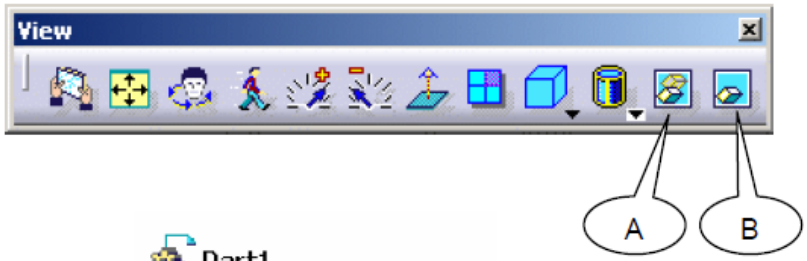

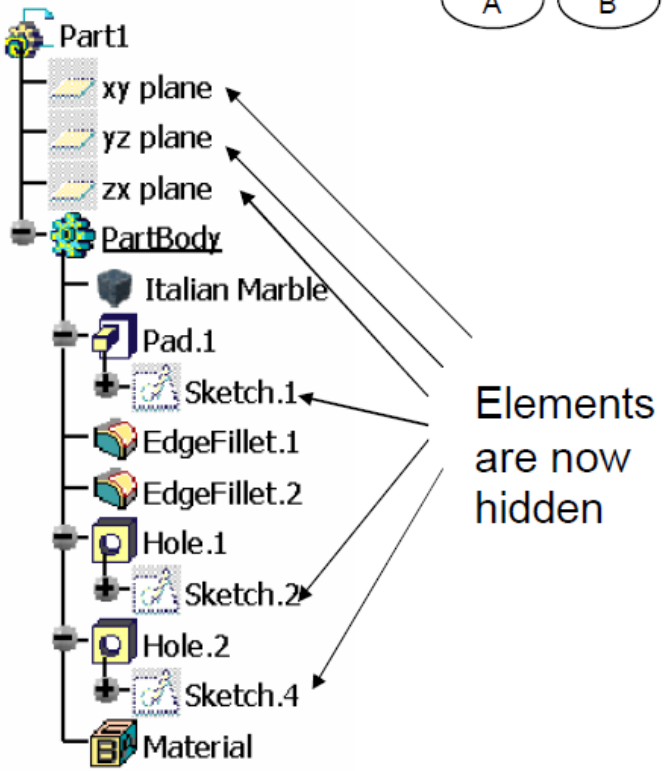

UPenAUTO : 2017-1-ES01-KA203-03858

Reference Planes

The default reference planes are the first three features in any part file. Their names are derived from the plane they are parallel to, relative to the part coordinate system:

XY plane
YZ plane
ZX plane

It is impossible to move or delete the planes.

The planes can provide a planer support on which to create a 2D sketch.

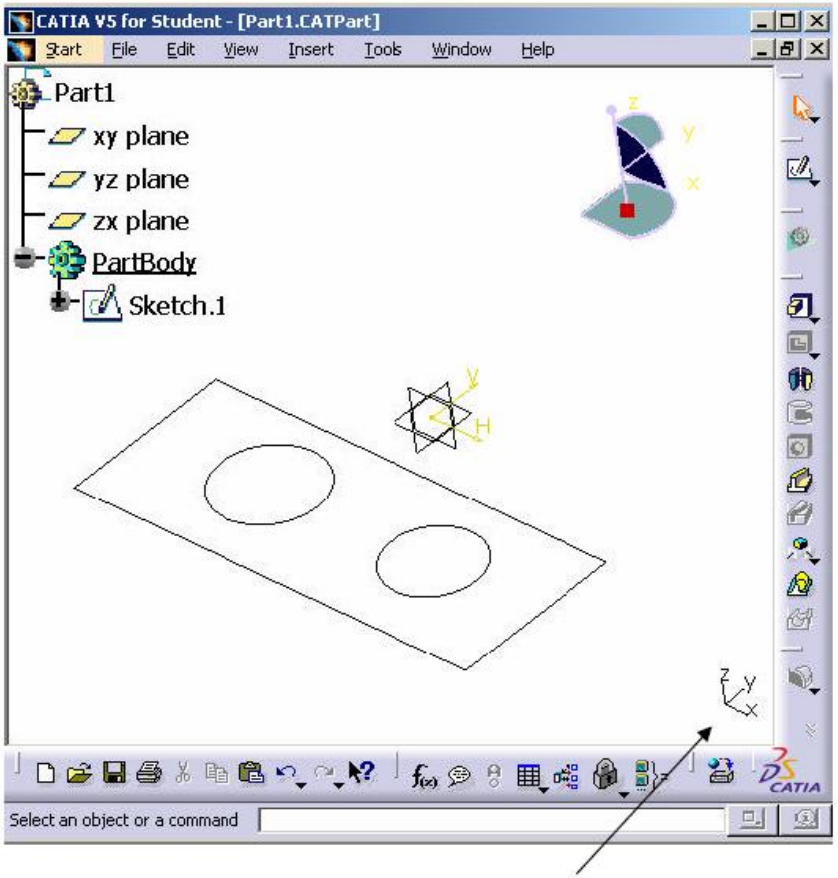

Global coordinate system

Create a Sketch

1. Select a planer support (e.g. datum plane, planer solid face) from the specification tree or by clicking the support directly.

2. Select the Sketcher Icon from any workbench where is possible to create a sketcher (e.g. Part Design workbench).

3. CATIA switches the current workbench to the sketcher workbench; The viewpoint is now parallel to the selected plane.

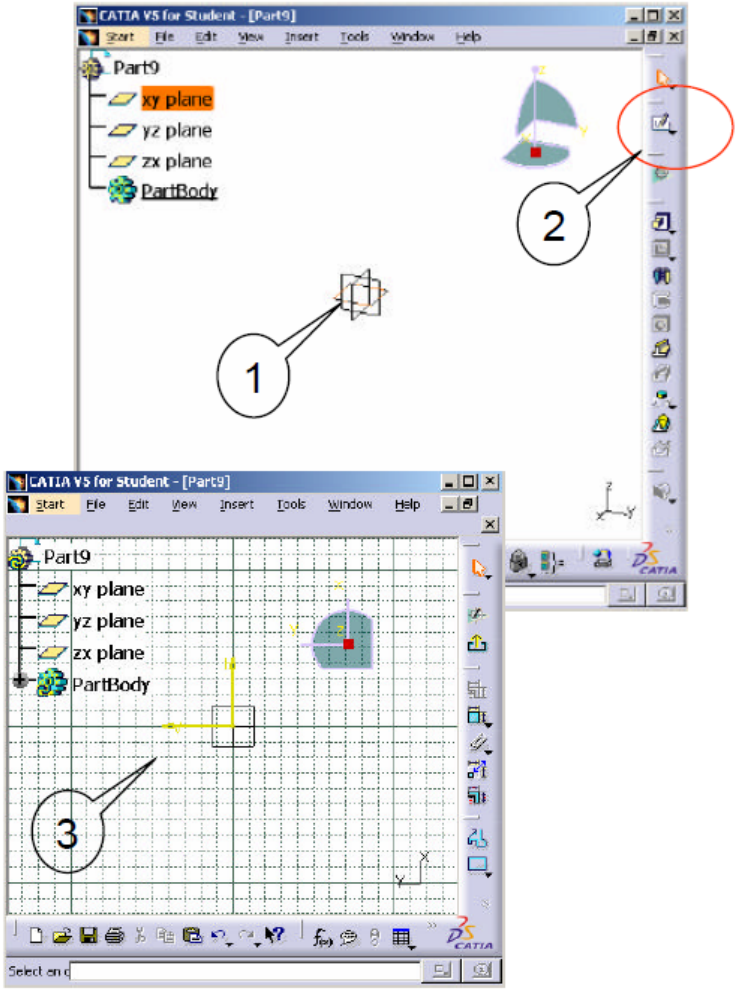

Toolbars in sketcher

A. Profile: Create 2D elements, such as points, lines, arcs, circles and axes.

B. Operation: Modify the existing elements, such as chamfer, fillet, trim, and mirror.

C. Sketch tools: Provide option commands

D. Constraint: Set various dimensional constraints (e.g. length, angle & radius) & geometrical constraints (e.g. coincidence, concentric, horizontal and symmetric)

E. Visualization: Simplify the view

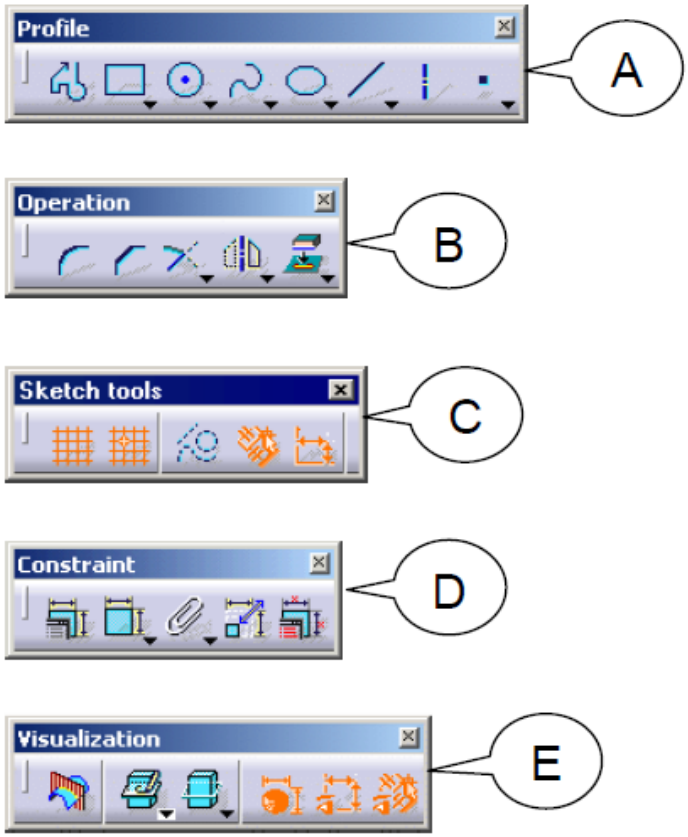

UPenAUTO : 2017-1-ES01-KA203-03858

Construction Geometry

Construction geometry is created within a sketch to aid in profile creation. Unlike standard geometry, it does not appear outside the sketcher workbench.

Construction geometry is shown in dashed format. When the "Construction/Standard element" icon is on, all sketched elements will be created as construction elements.

You can also toggle any elements from standard to construction, or vice versa by clicking the "construction/standard element" icon.

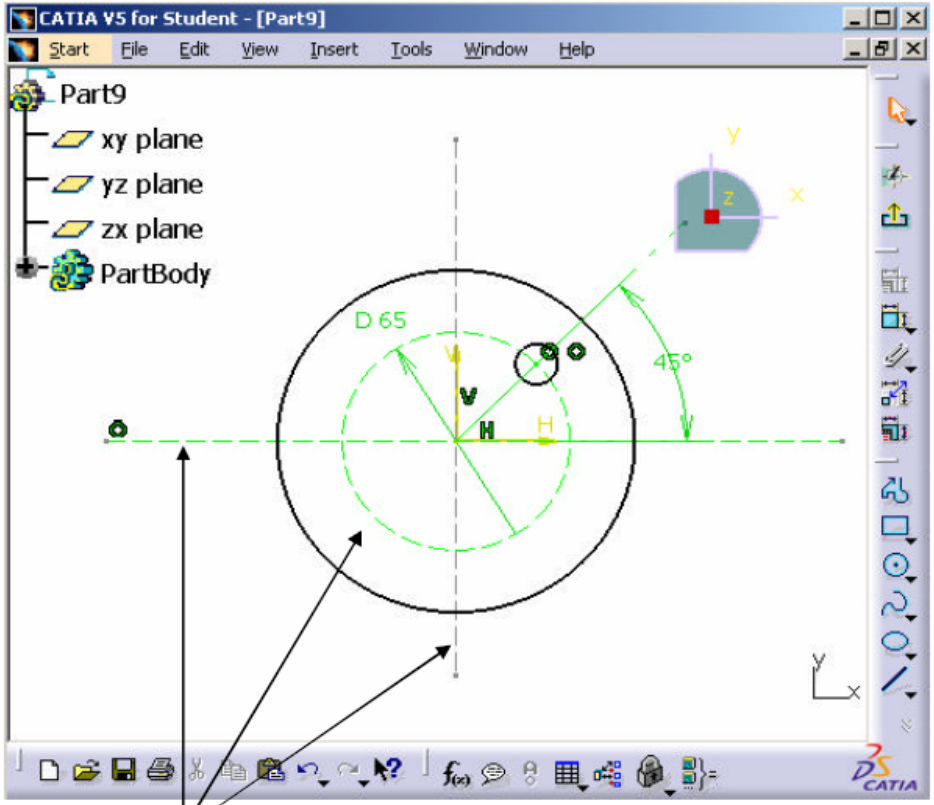

Construction geometry

UPenAUTO : 2017-1-ES01-KA203-03858

Sketch Assistant

CASE-1

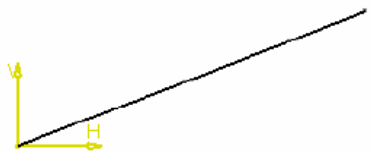

This is a line on the sketch

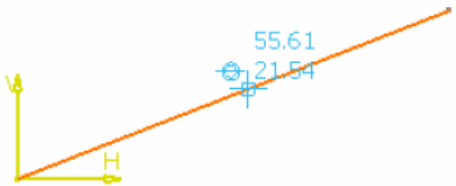

When the cursor is on the line, the line will turn in orange and an empty circle appears next to the cursor

When the cursor is at the endpoint of the line, a solid circle appears next to the cursor

CASE-2

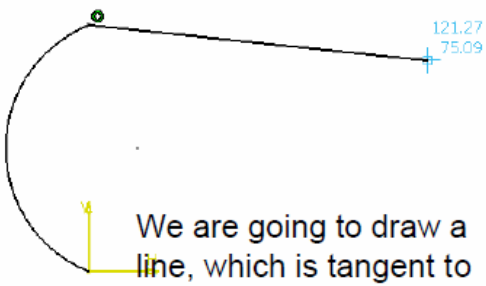

We are going to draw a line, which is tangent to the arc

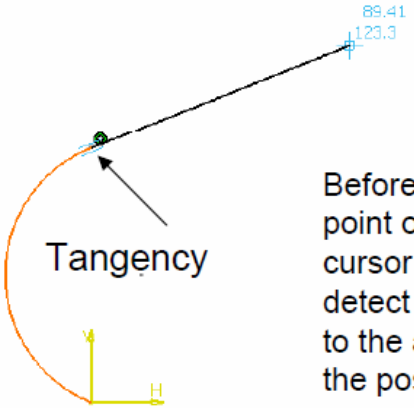

Before clicking the second point of the line, move the cursor until the system can detect that the line is tangent to the arc. Click and confirm the position.

Constraining the sketch

- **Dimensional Constraints**
  (click the icon, then select the element(s))

- Length
- Distance
- Angle
- Radius/Diameter

Remark: To create the dimensions continuously, double-click the icon so that the icon is always on until you re-click it again

- **Geometrical Constraints**
  (multi-select the two elements by pressing "CTRL" key and click the icon)

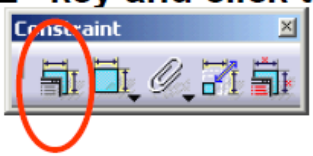

- Perpendicularity
- Horizontal/Vertical
- Concidence
- Tangency

- Symmetry (multi-select the elements on the both side and then select the axis)

You can also create constraints with other sketches and 3D elements out of the sketch

Controlling the direction of a dimension constraint

The default dimension direction is parallel to the line between the circle centre. To change the direction to horizontal or vertical, right mouse click and select the desired orientation.

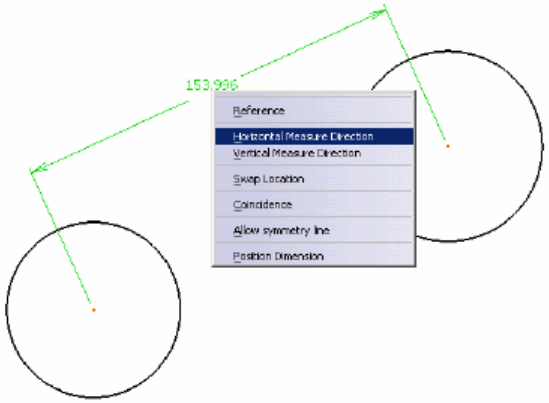

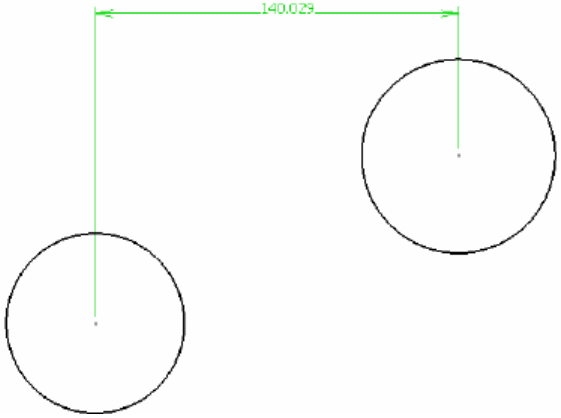

UPenAUTO : 2017-1-ES01-KA203-03858

Color and Diagnostic

1. White: Under-constrained
2. Green: Fixed/Fully constrained
3. Purple: Over-constrained
4. Red: Inconsistent

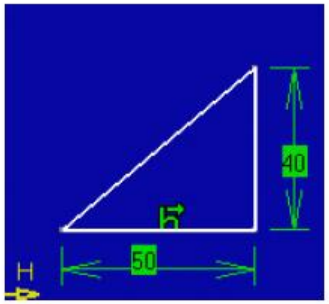

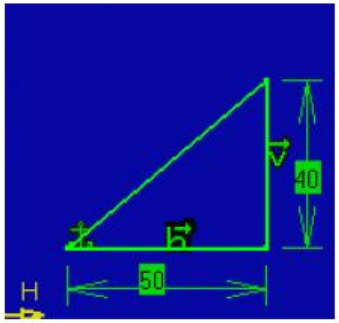

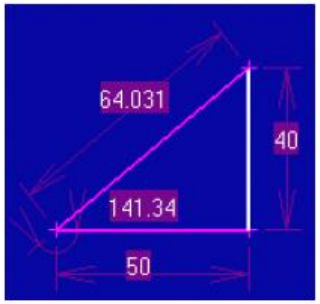

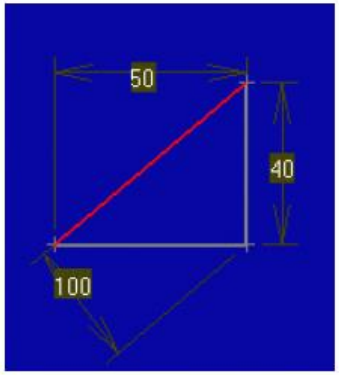

Only case 1 & 2 are allowable in CATIA; for case 3 & 4, you must fix the error before quitting the sketcher workbench, otherwise a warning message will pop-out

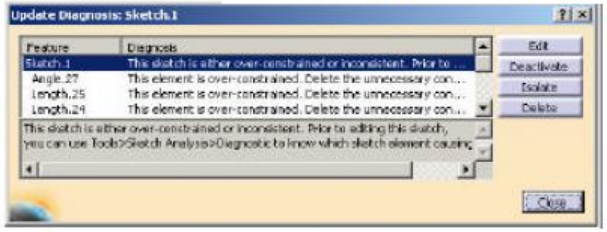

View Orientation

- By default, the screen is parallel to the sketch support.
- To making constraints between the sketch geometry and the 3D element, you may need to rotate the model into a 3D view.
- To return the default orientation, select the “Normal View” icon.

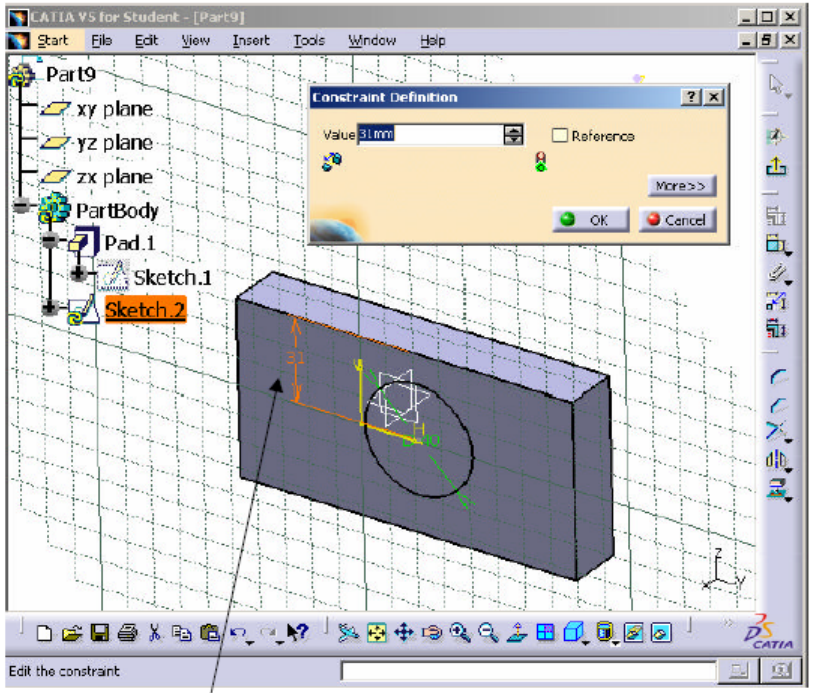

We can create a distance constraint between the circle centre and the solid edge

Exiting the Sketcher

- To exit the sketcher workbench, select “Exit Workbench” icon

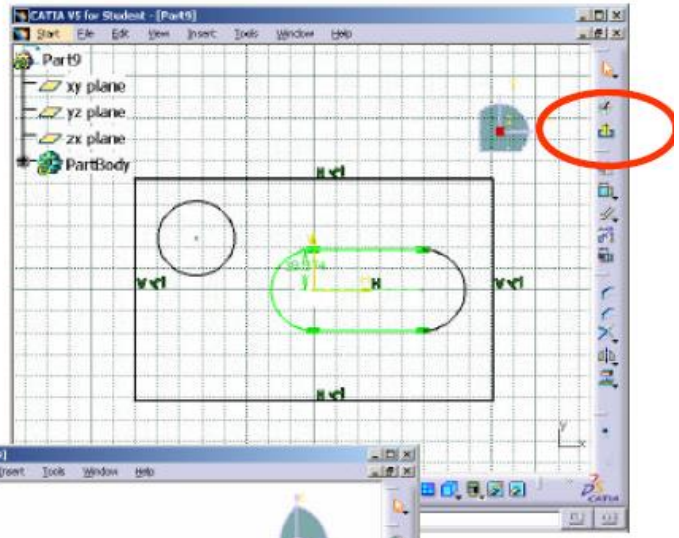

- After that, the screen will be back to 3D view and the workbench will be switched back to the original.

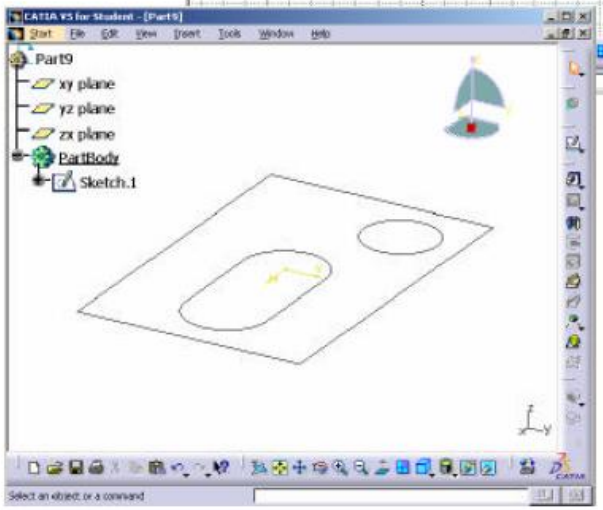

UPenAUTO : 2017-1-ES01-KA203-03858

Scketches Exercises

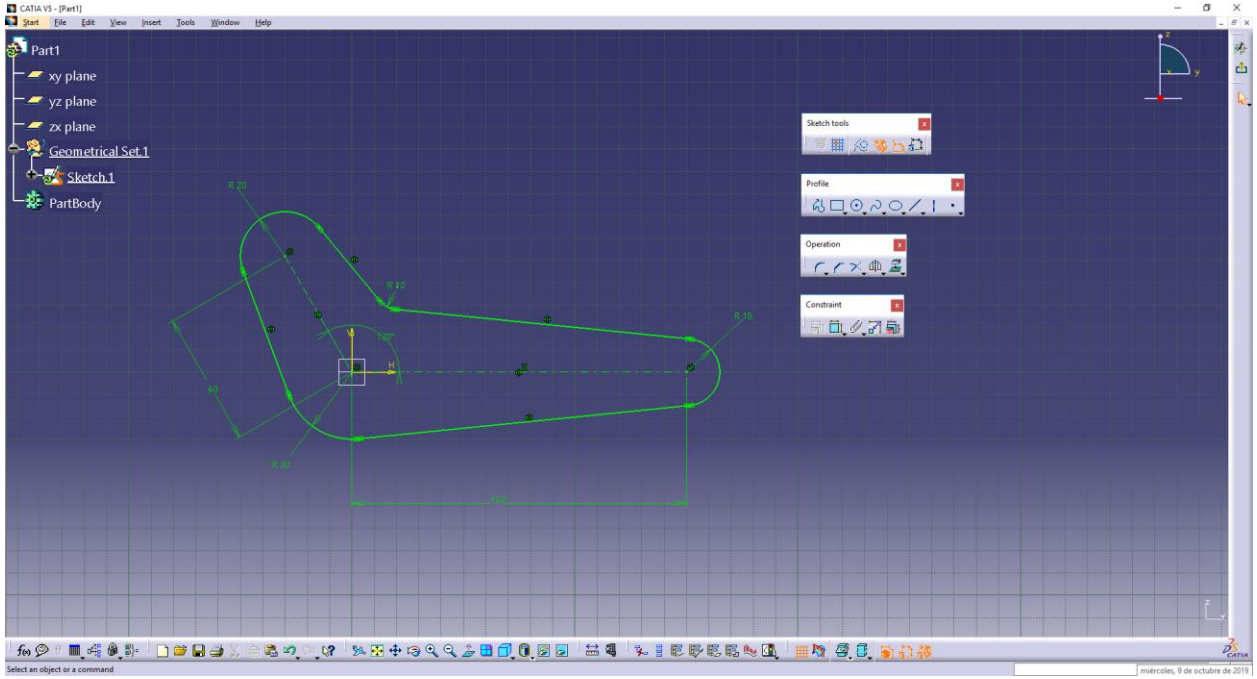

UPenAUTO : 2017-1-ES01-KA203-03858

Basic design with CATIA V5

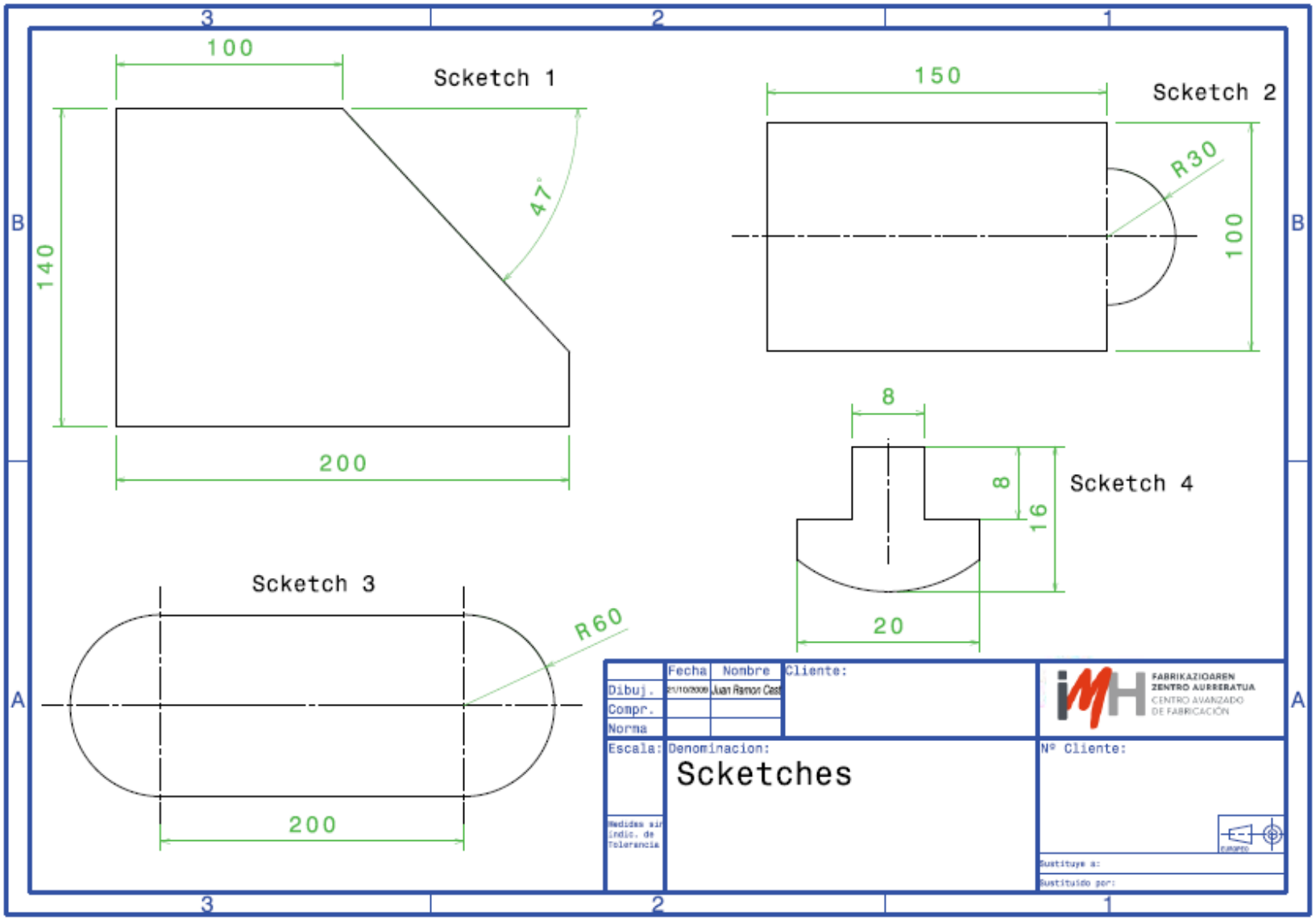

Basic design with CATIA V5

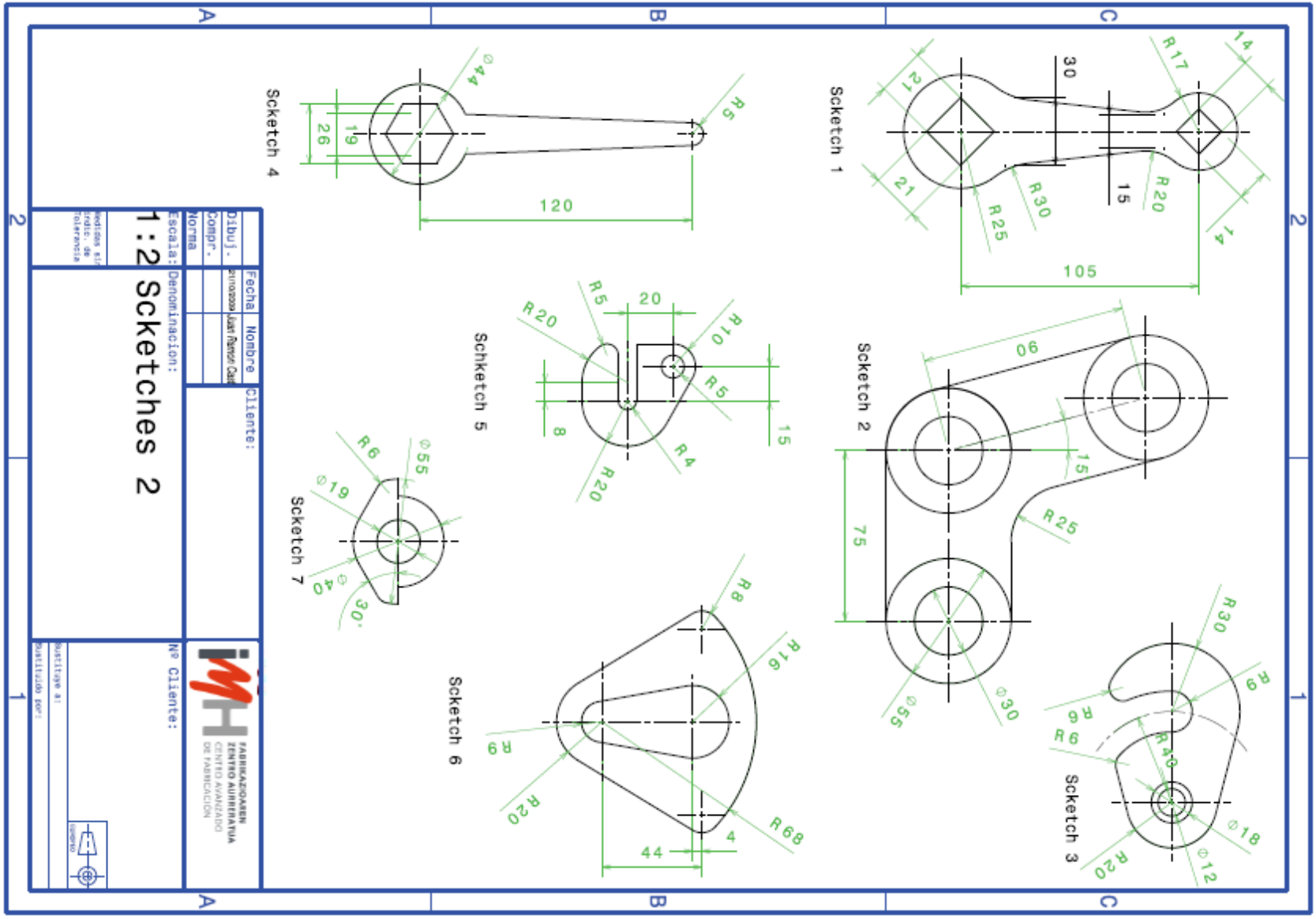

Basic design with CATIA V5

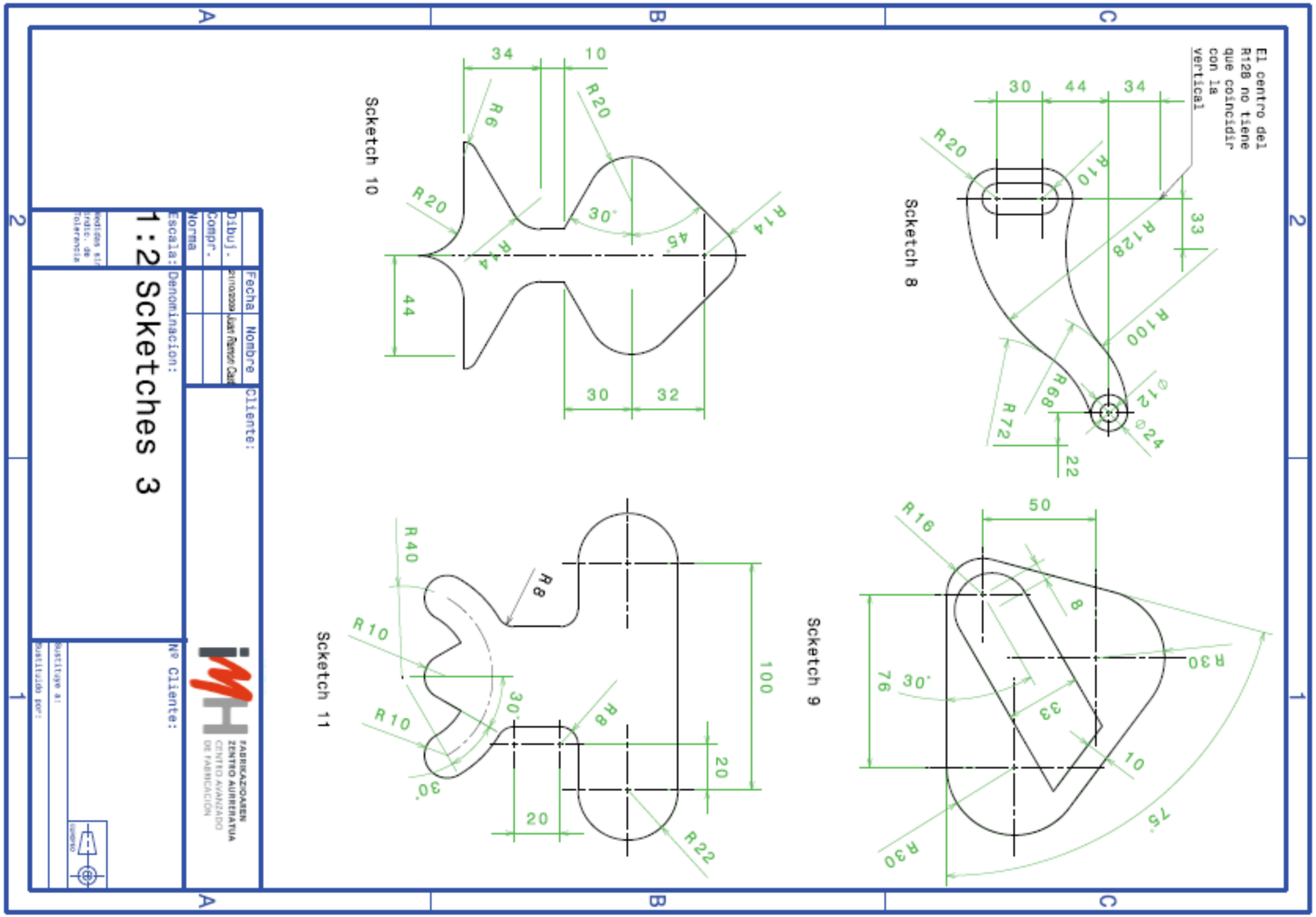

Basic design with CATIA V5

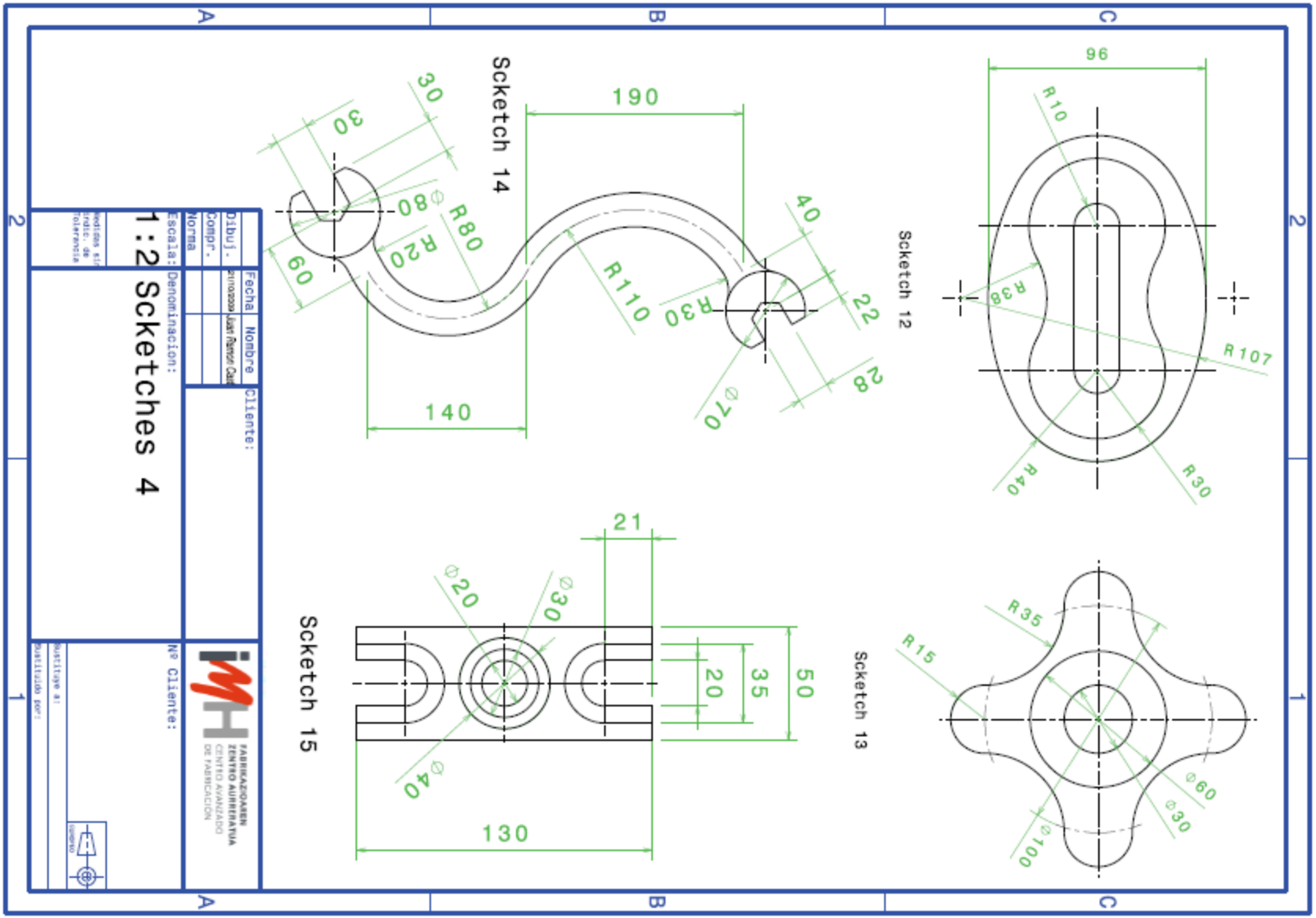

Solid parts Exercises

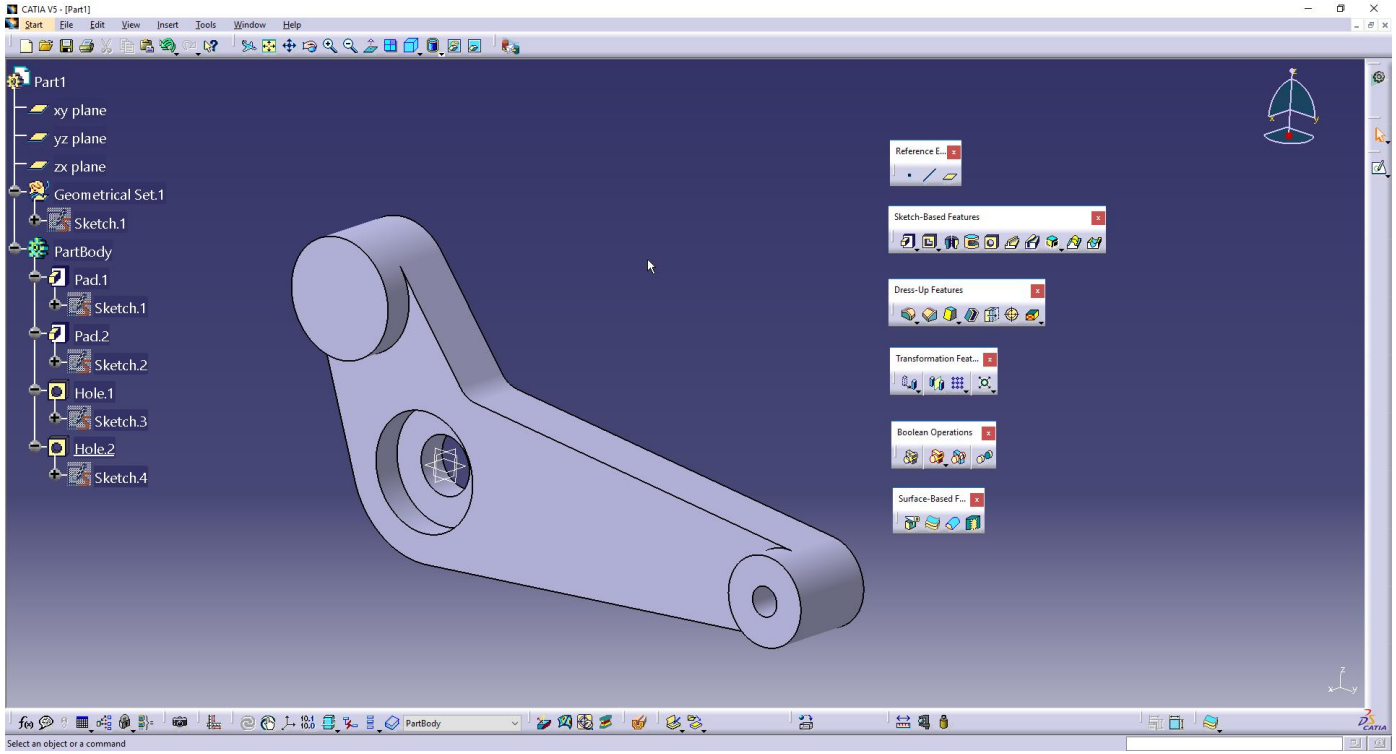

UPenAUTO : 2017-1-ES01-KA203-03858

Basic design with CATIA V5

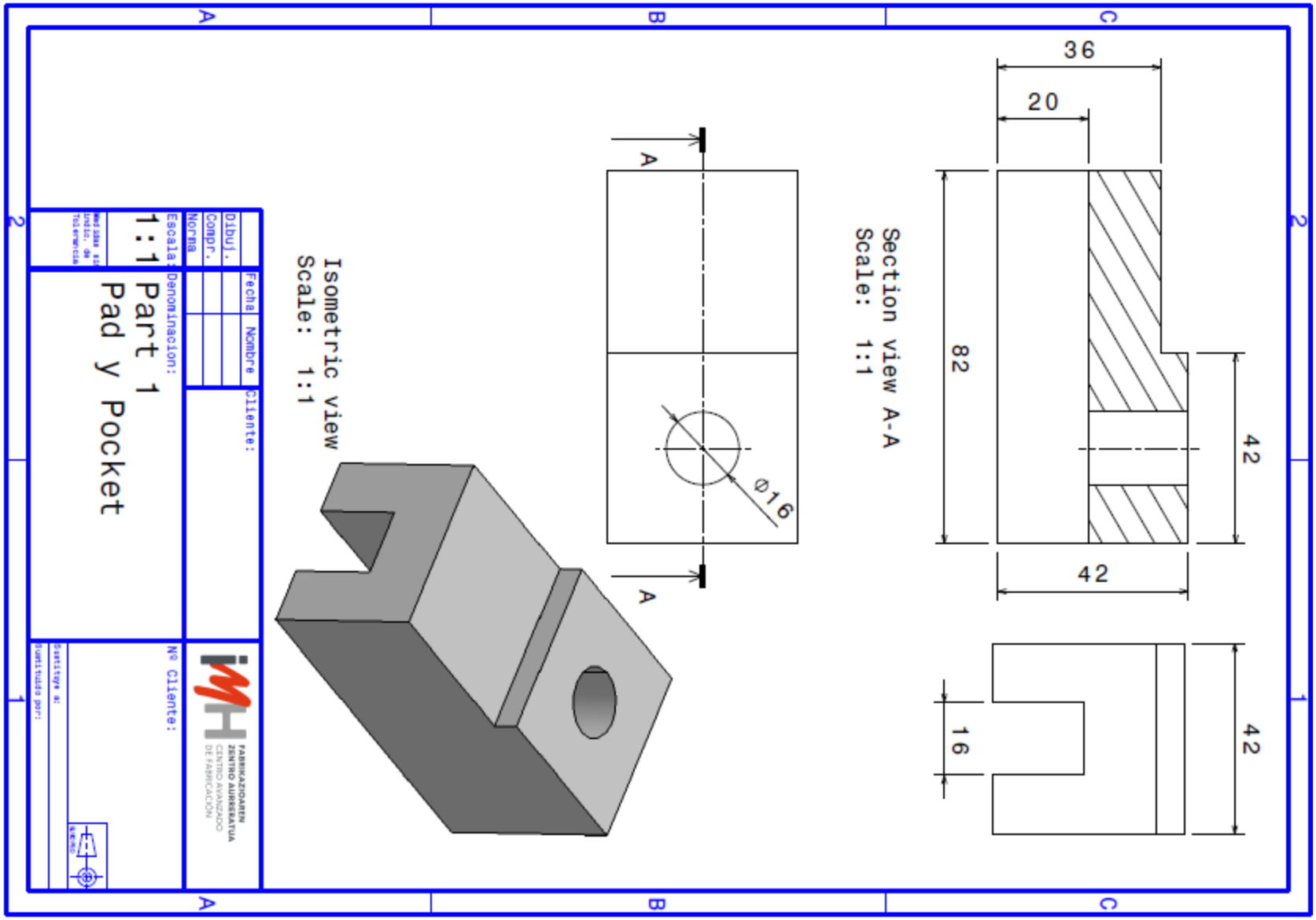

Basic design with CATIA V5

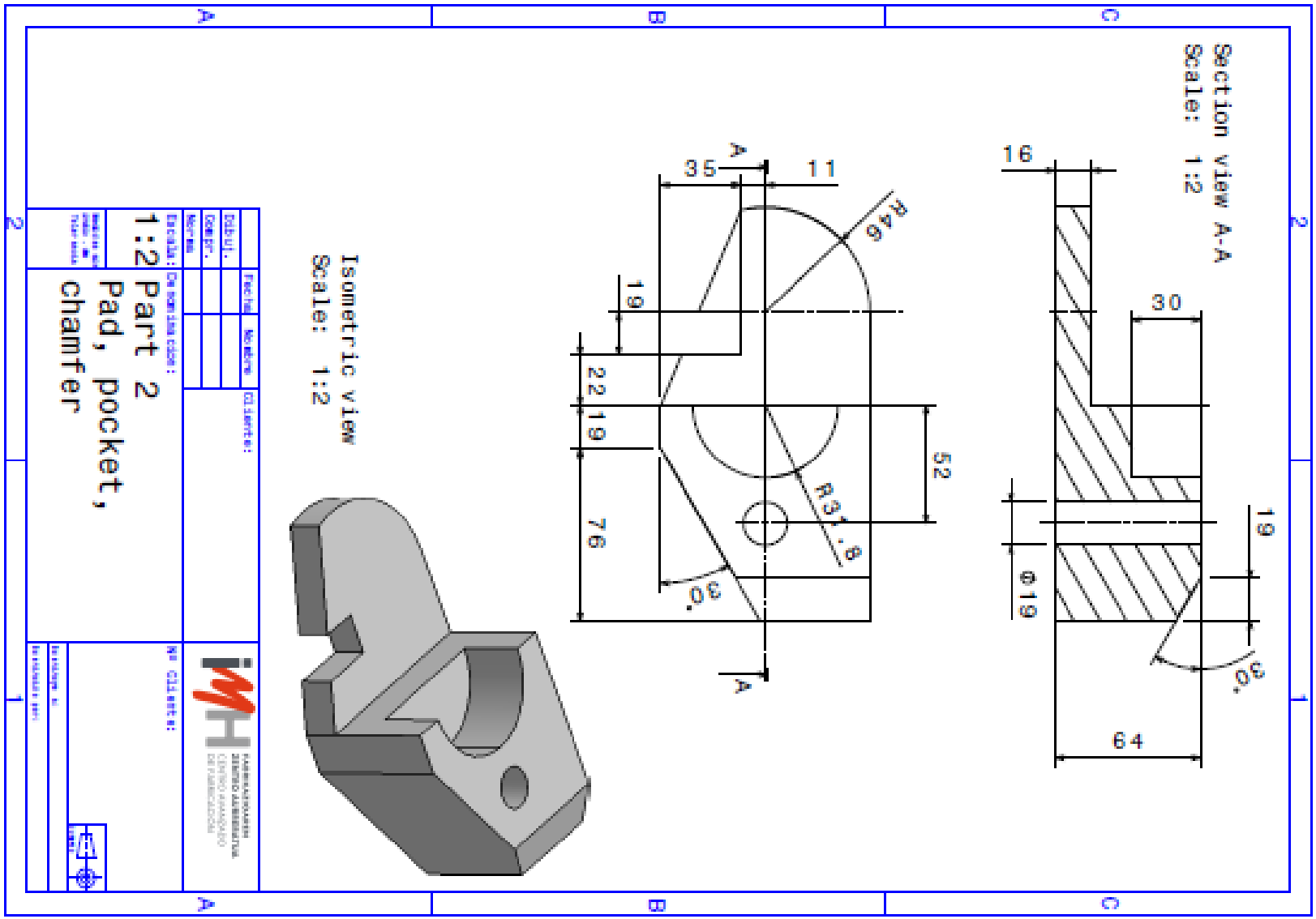

Basic design with CATIA V5

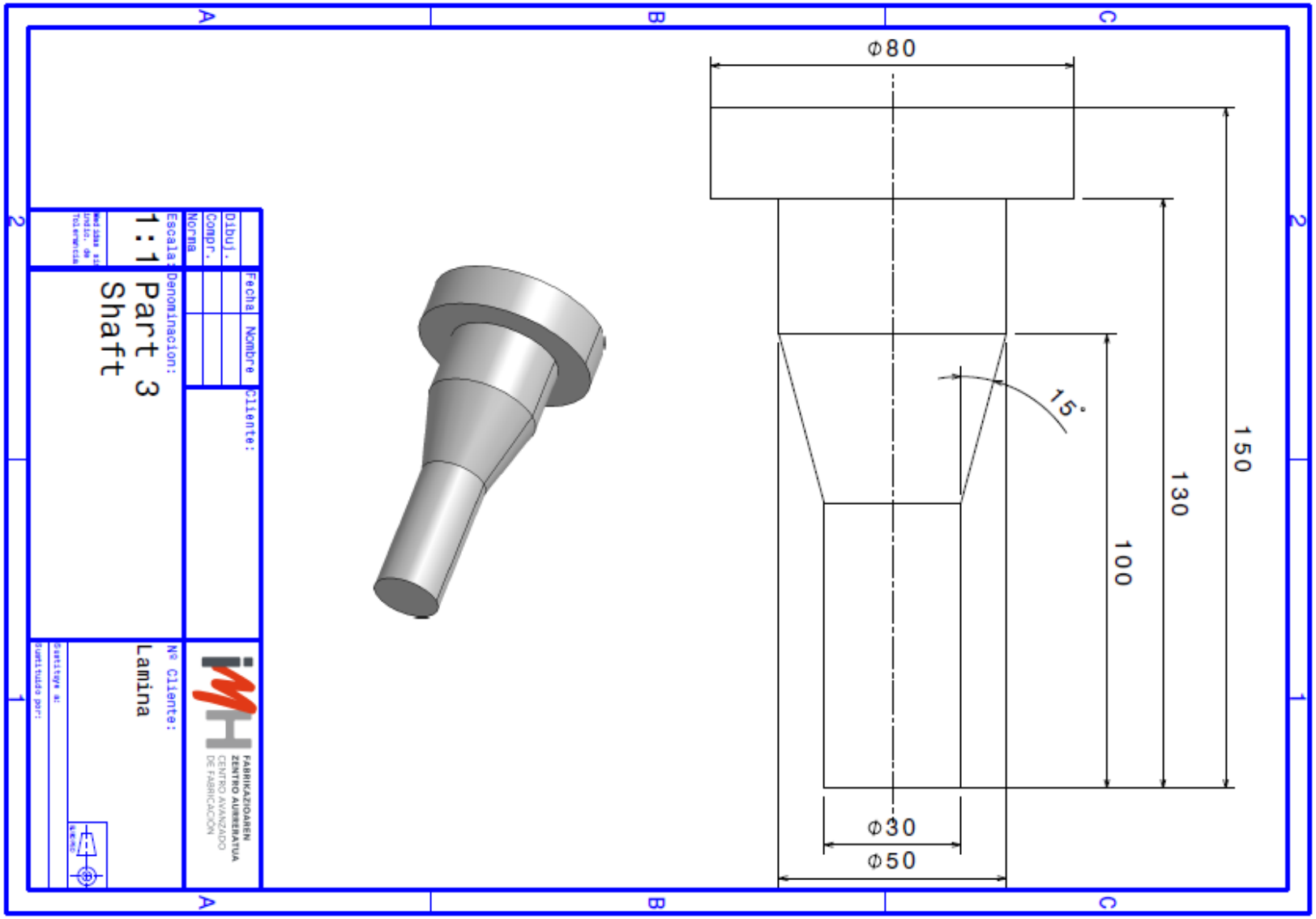

Basic design with CATIA V5

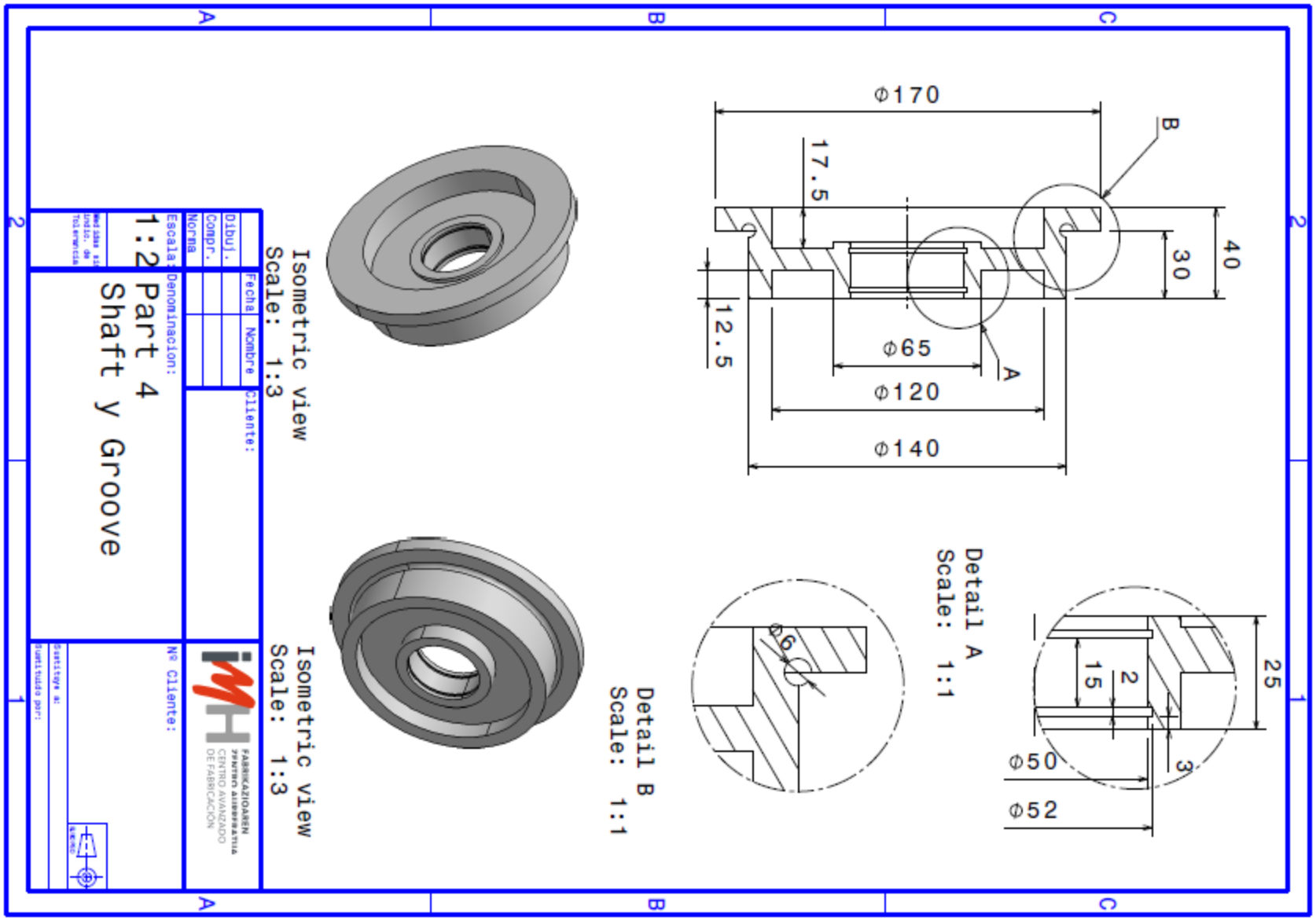

Basic design with CATIA V5

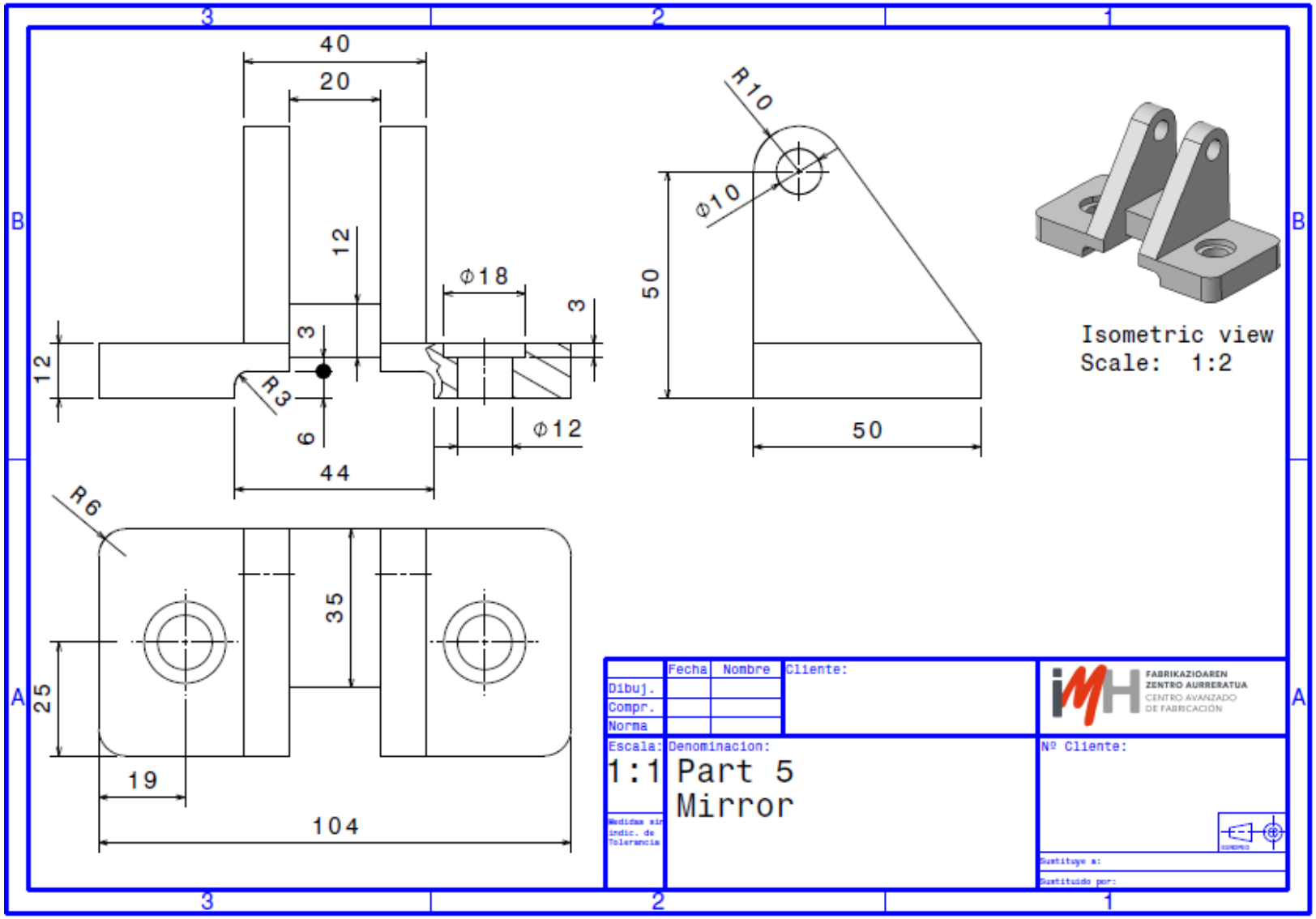

Surfaces Exercises

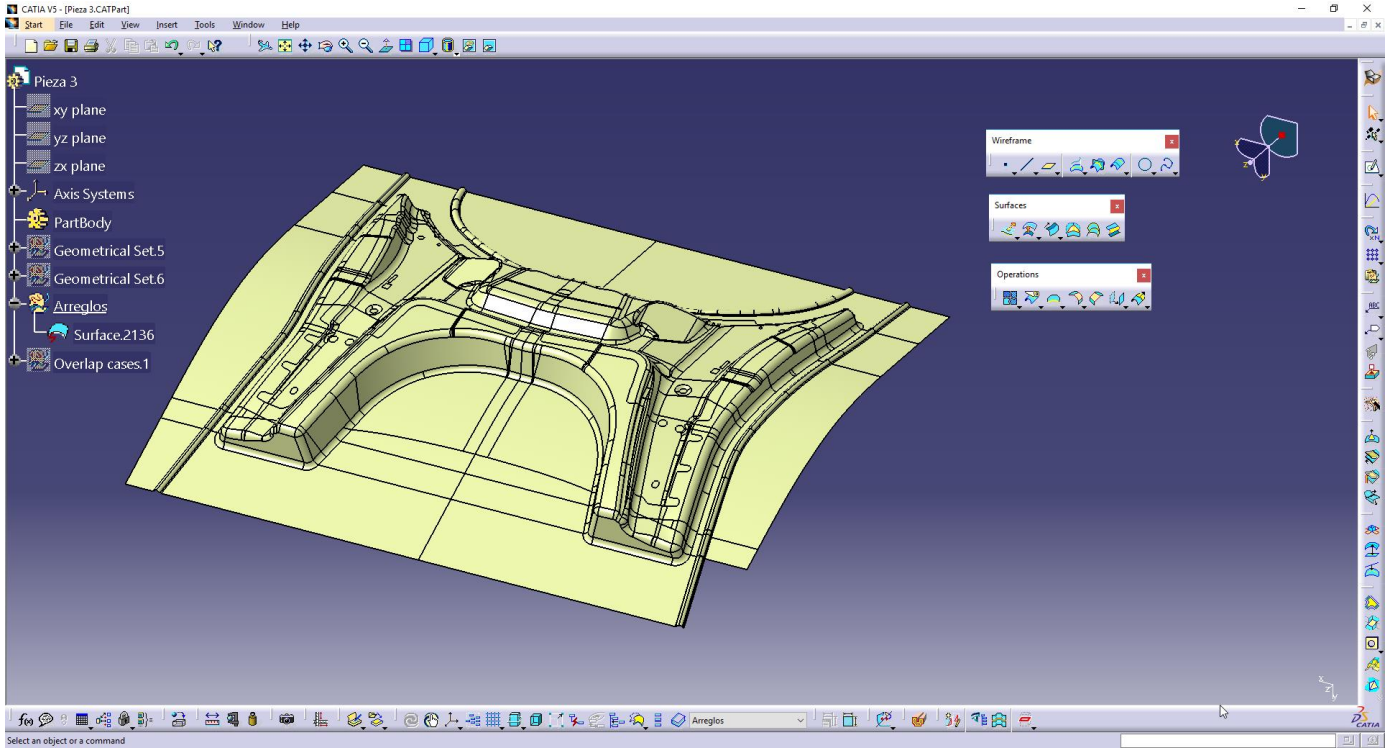

UPenAUTO : 2017-1-ES01-KA203-03858

Basic design with CATIA V5

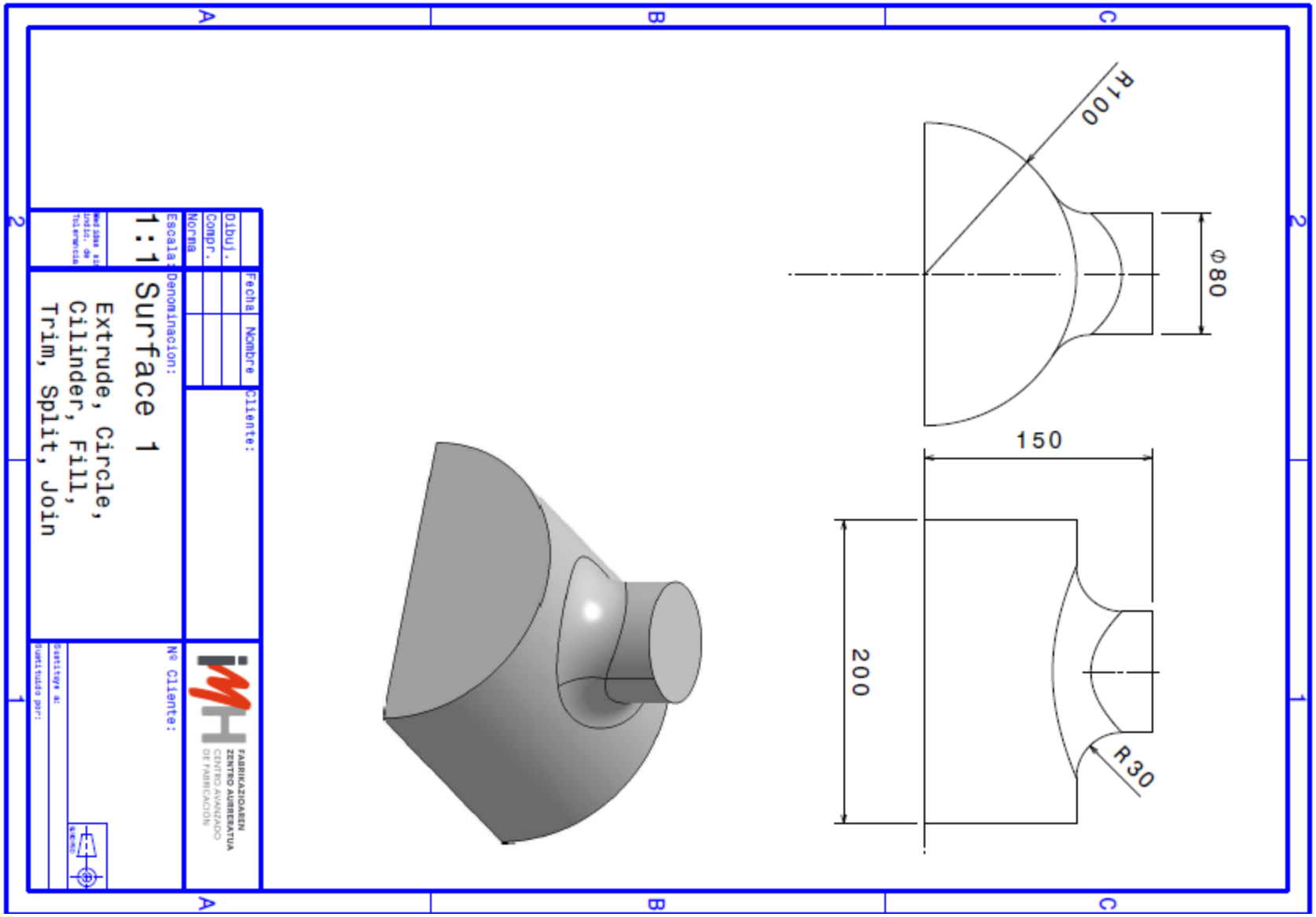

Basic design with CATIA V5

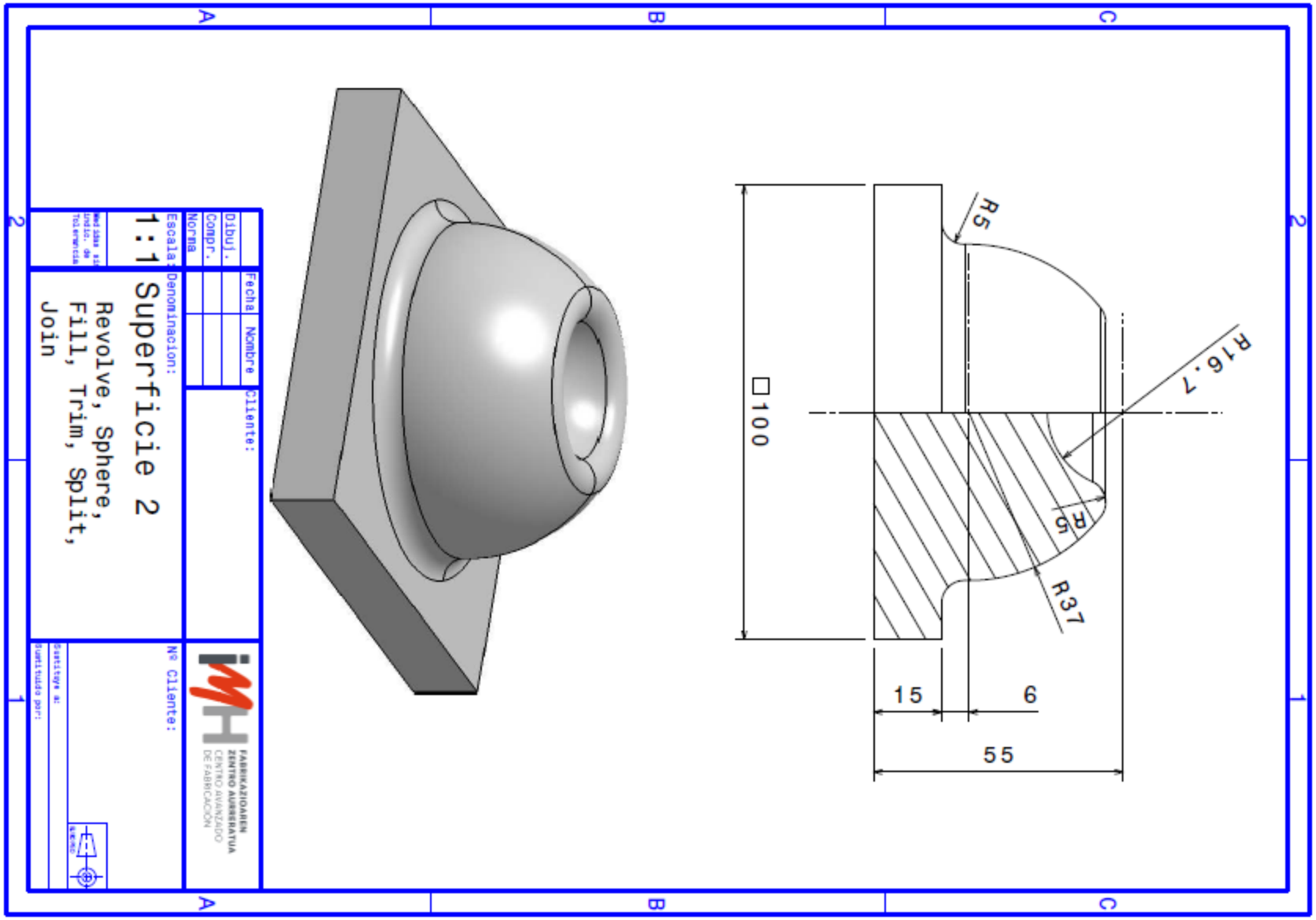

Basic design with CATIA V5

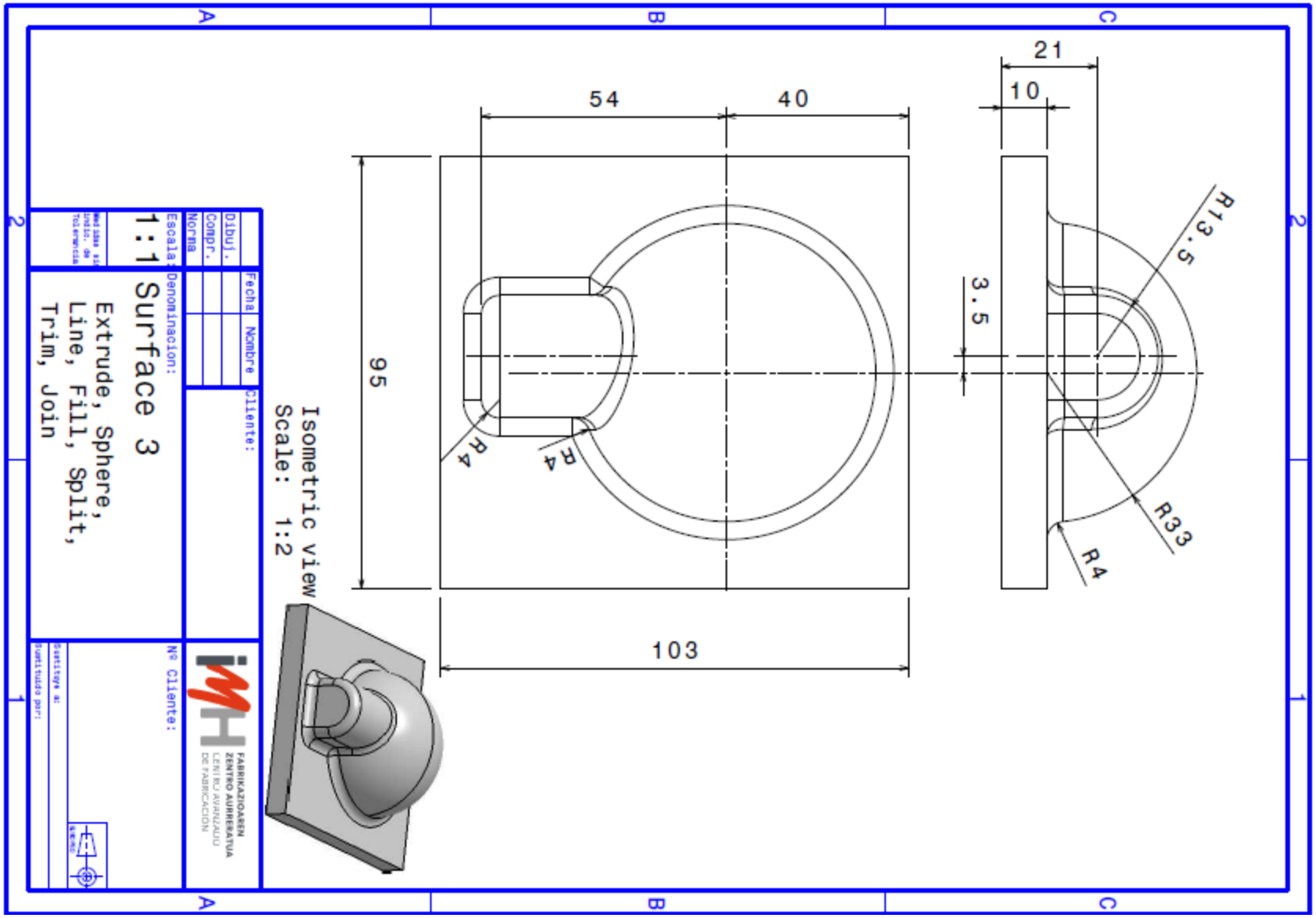

Basic design with CATIA V5

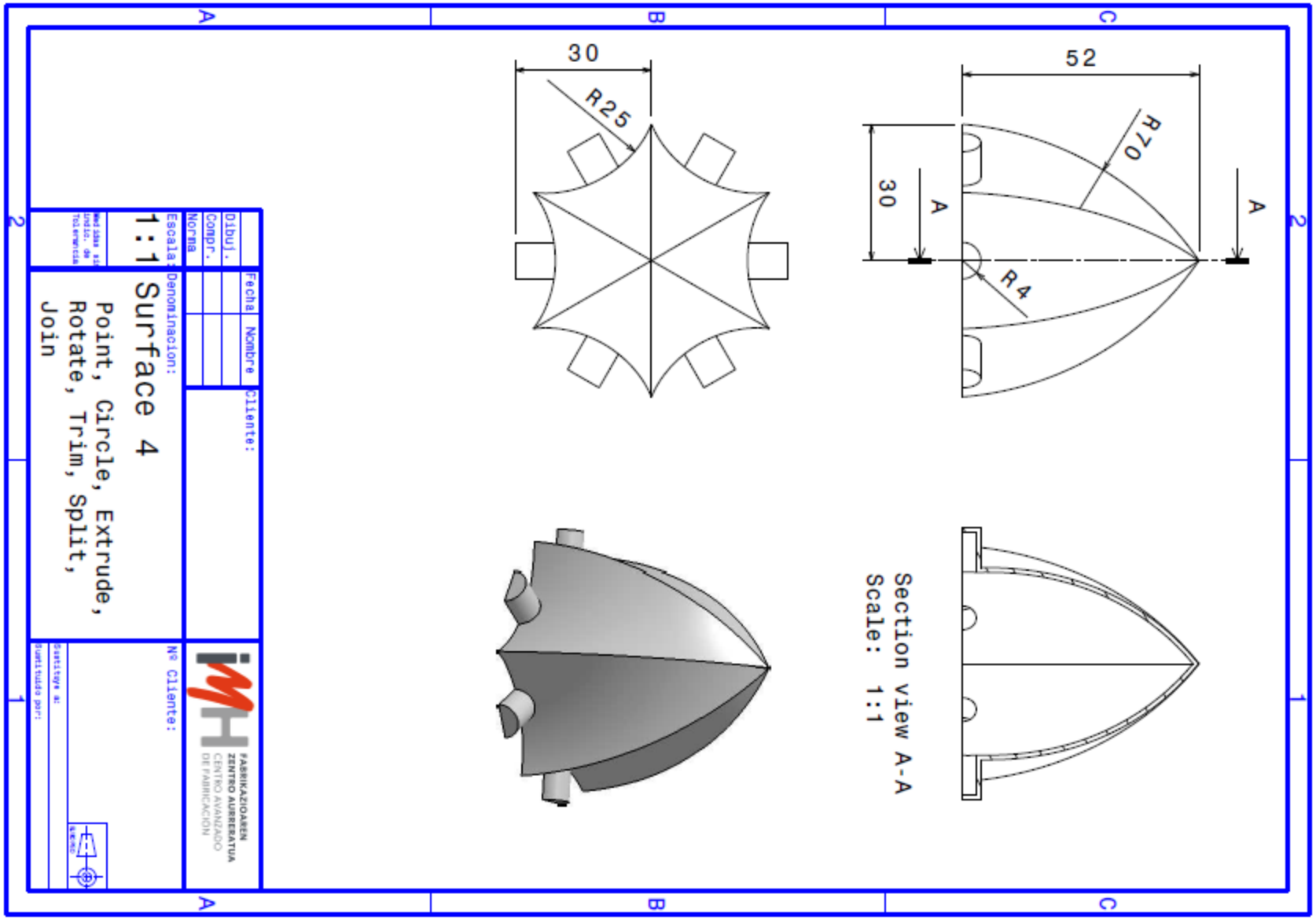

Basic design with CATIA V5

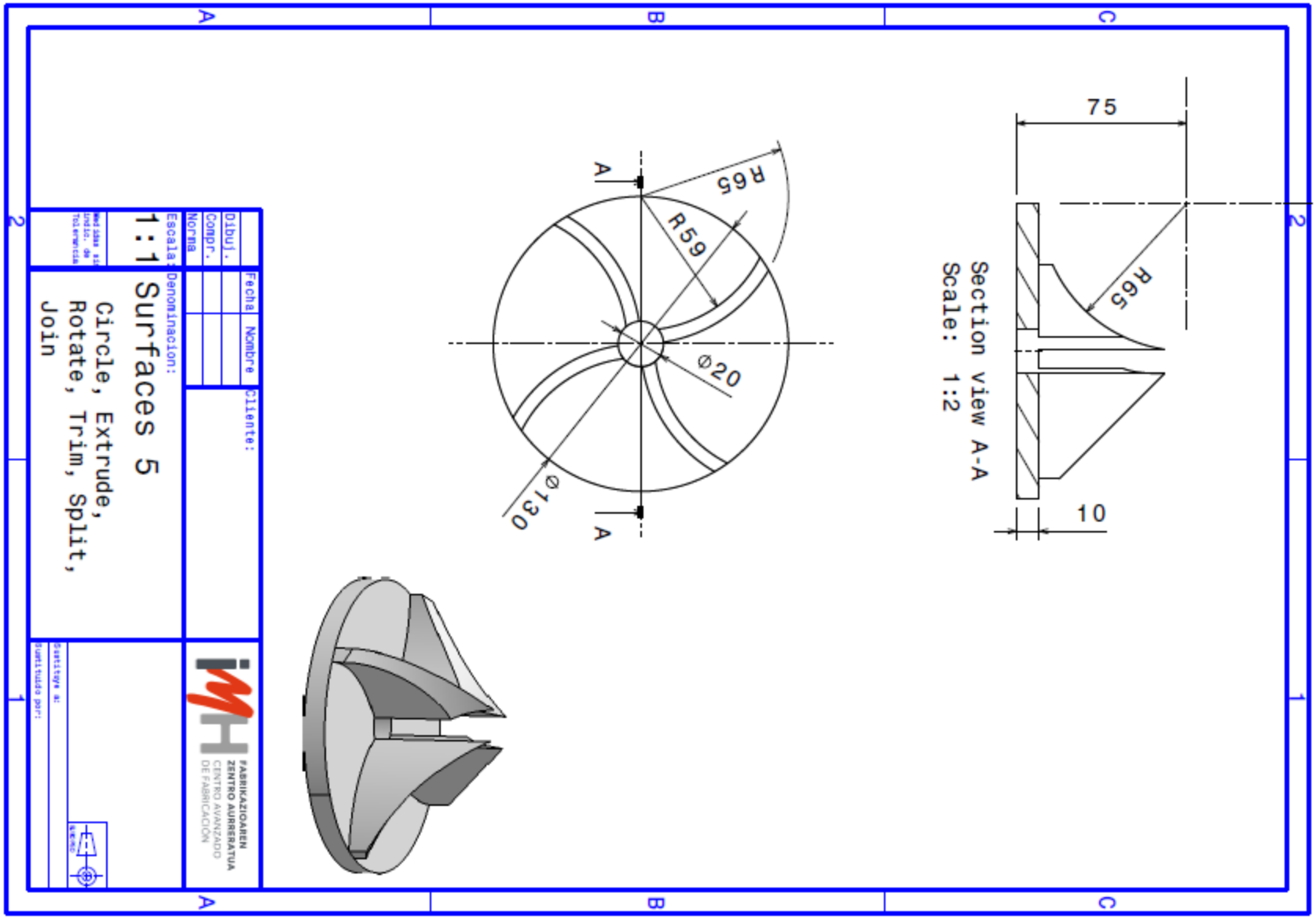

Basic design with CATIA V5

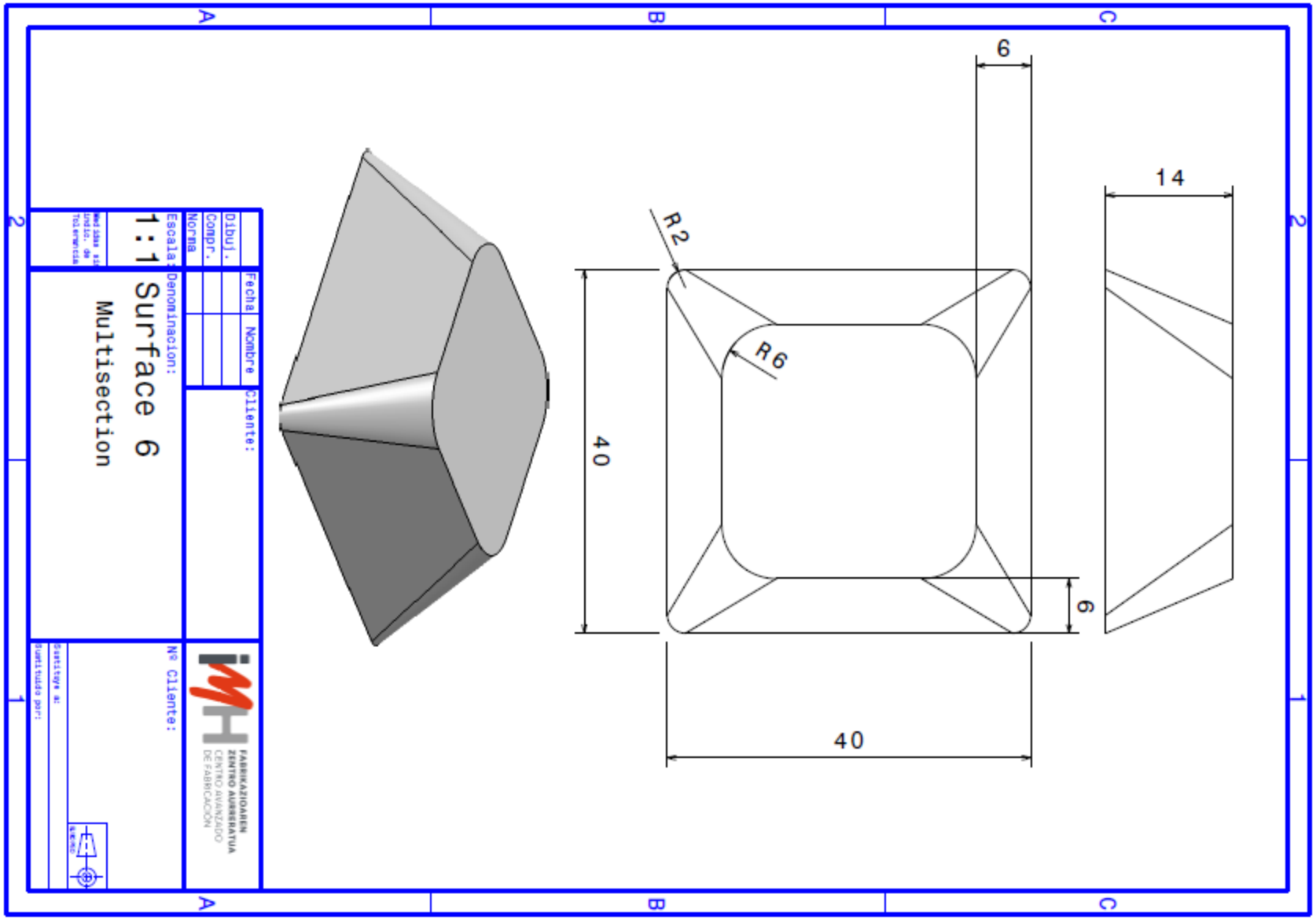

Basic design with CATIA V5

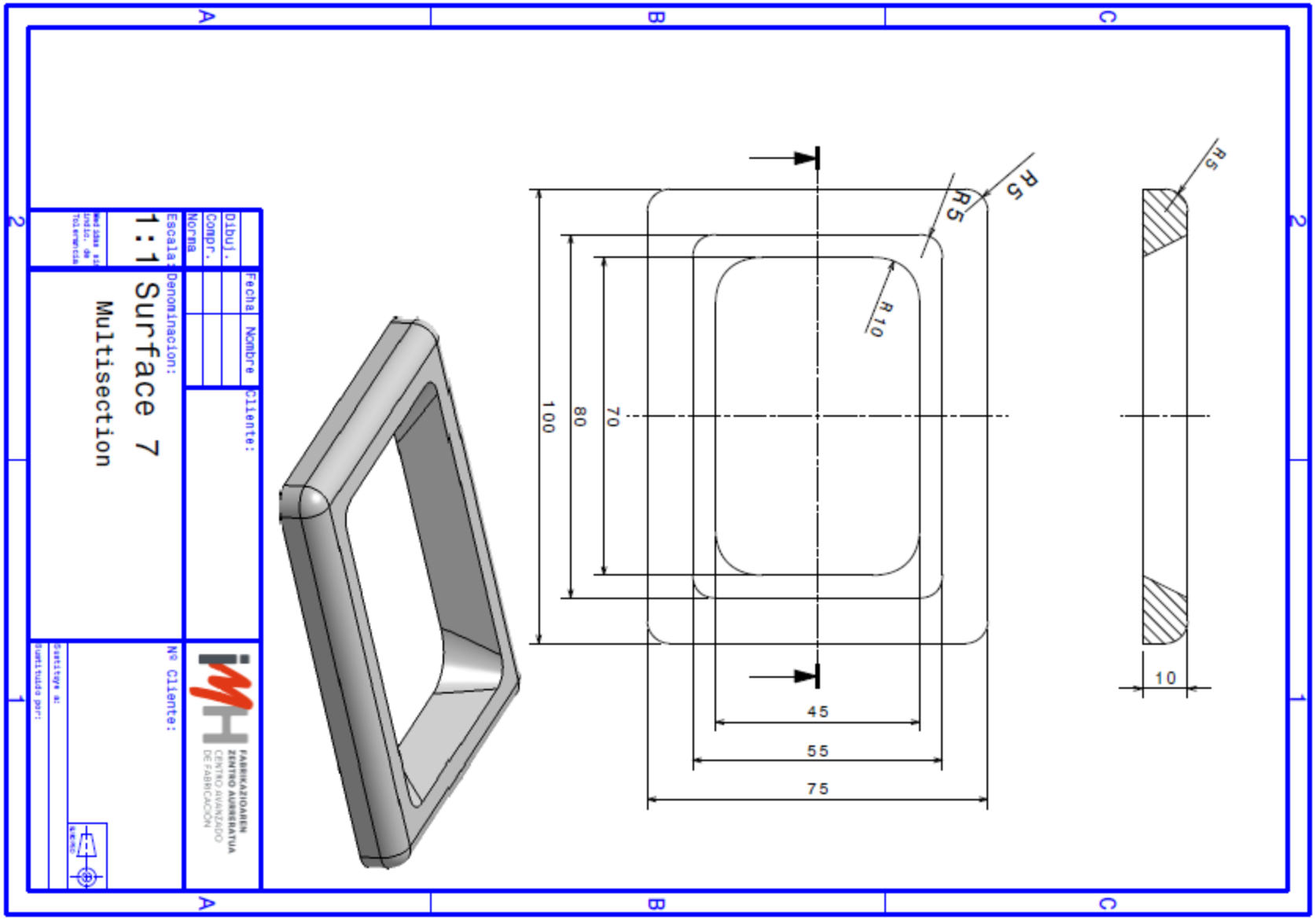

Basic design with CATIA V5

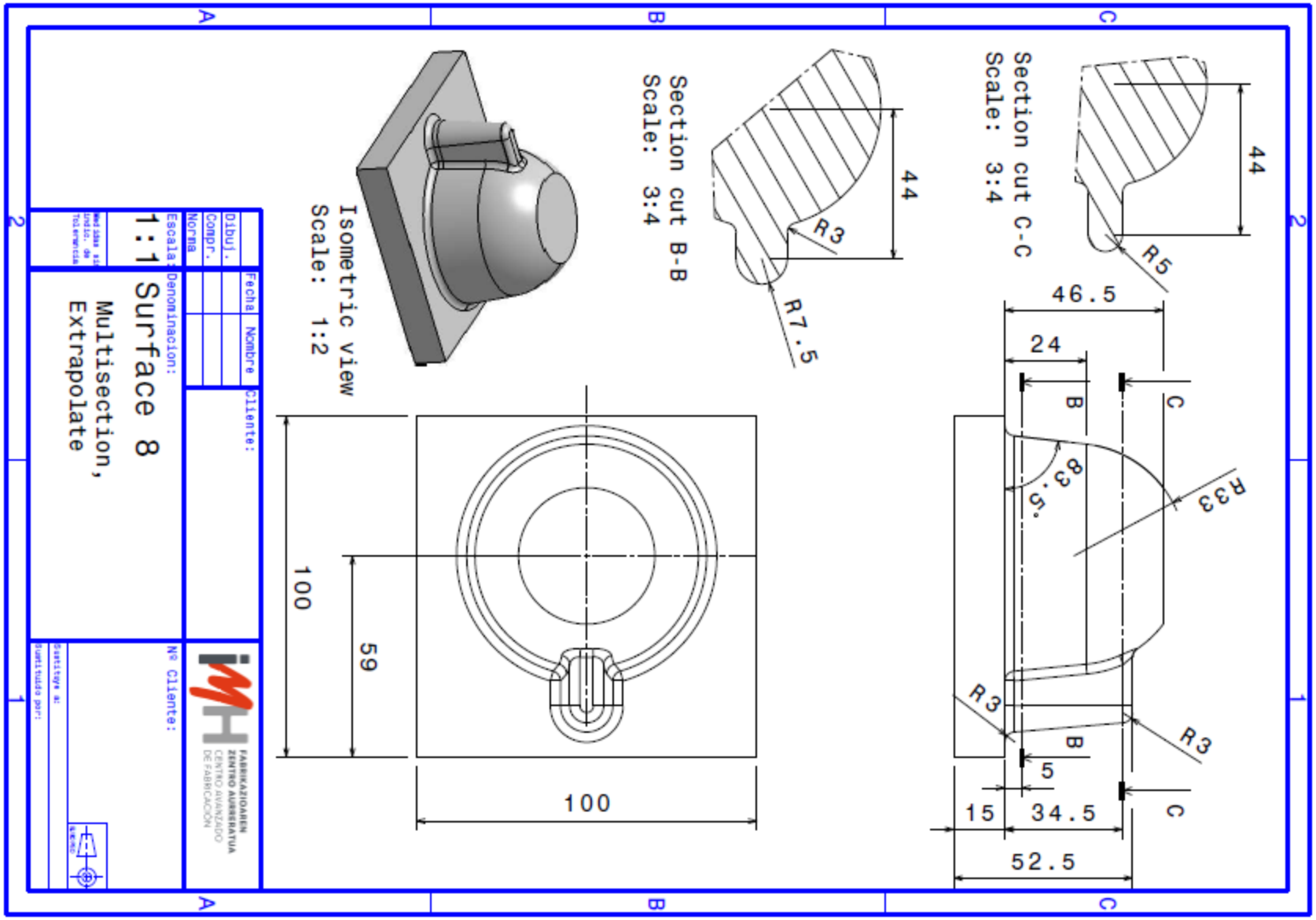

Basic design with CATIA V5

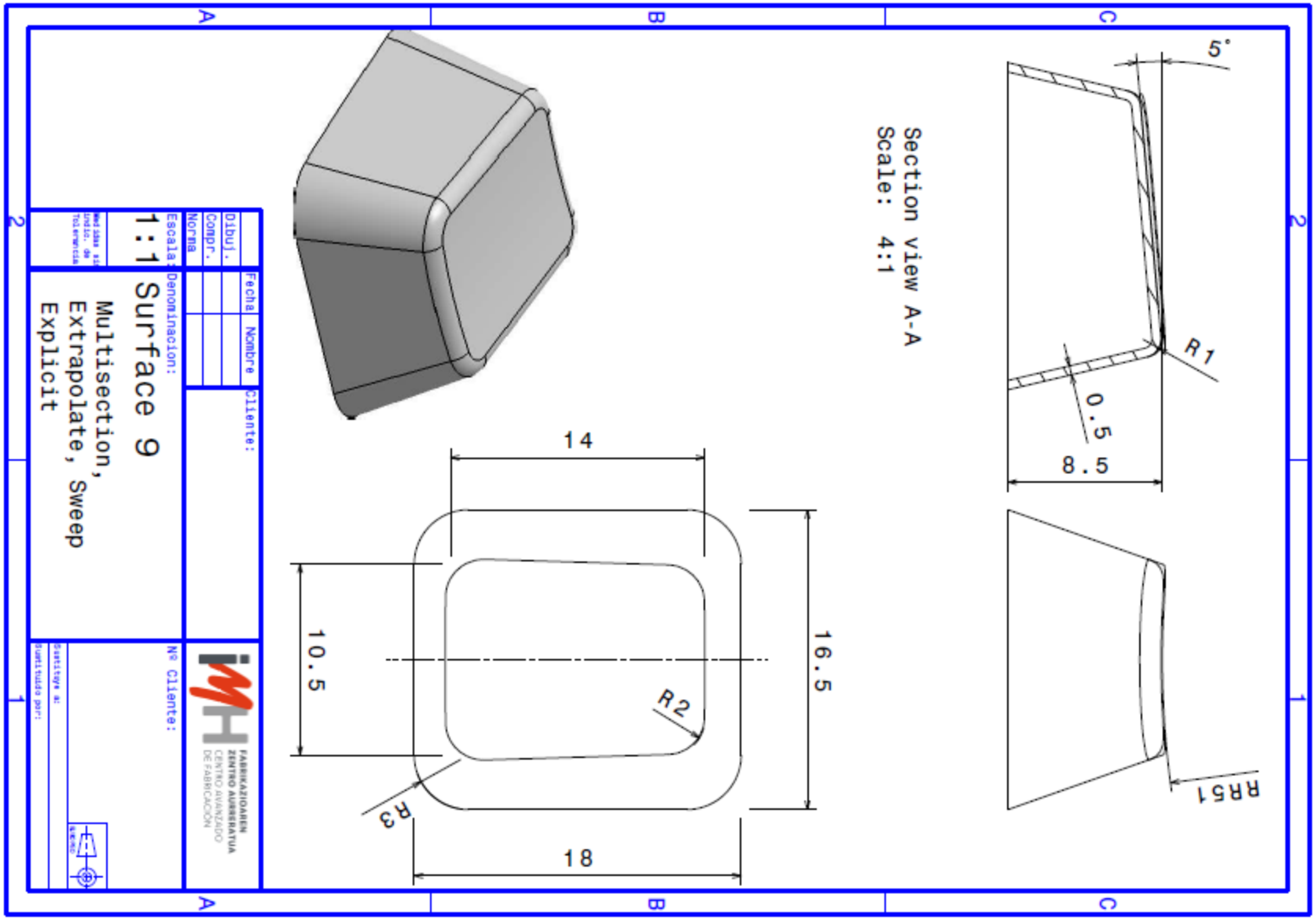

Basic design with CATIA V5

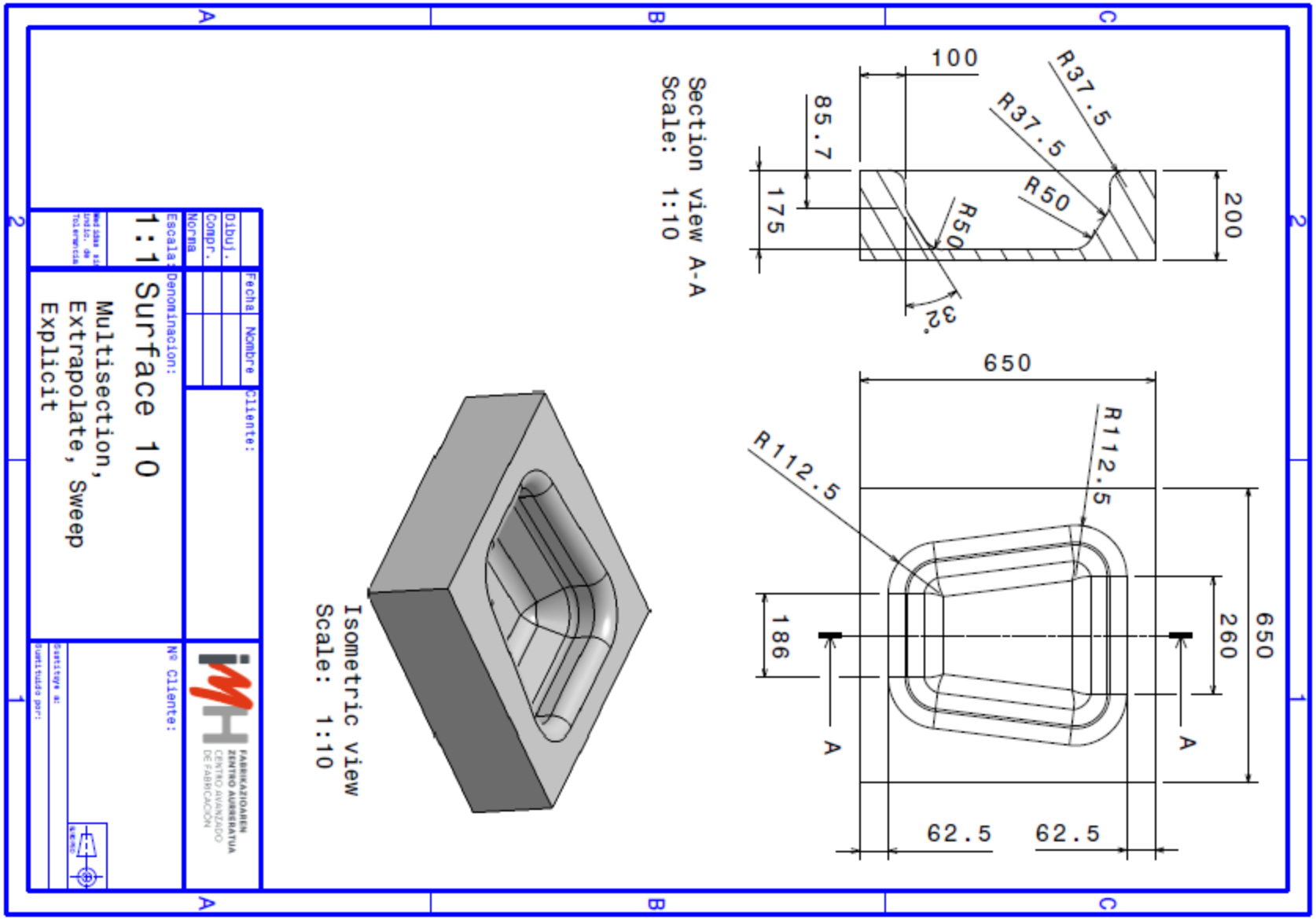

Basic design with CATIA V5

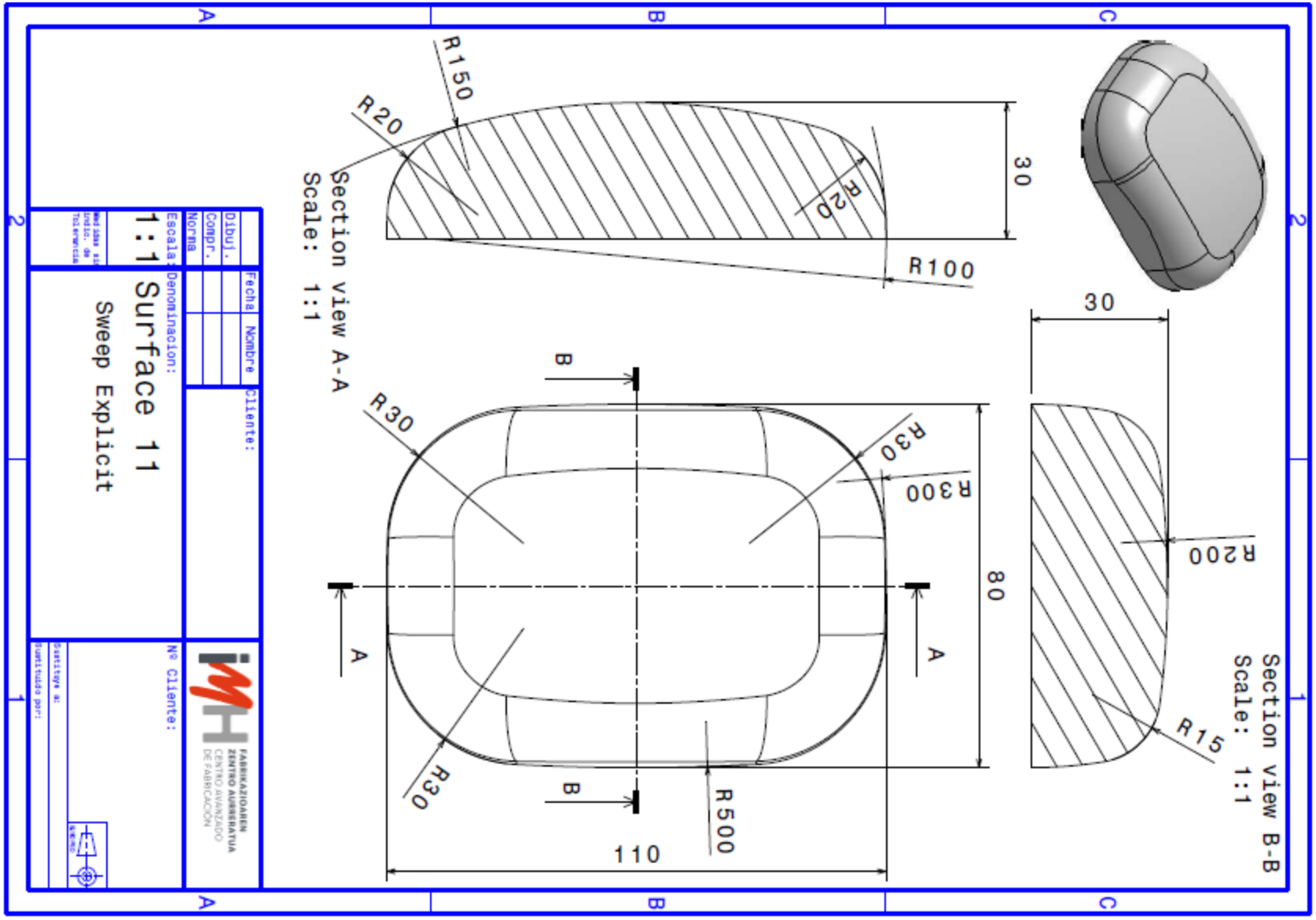

Basic design with CATIA V5

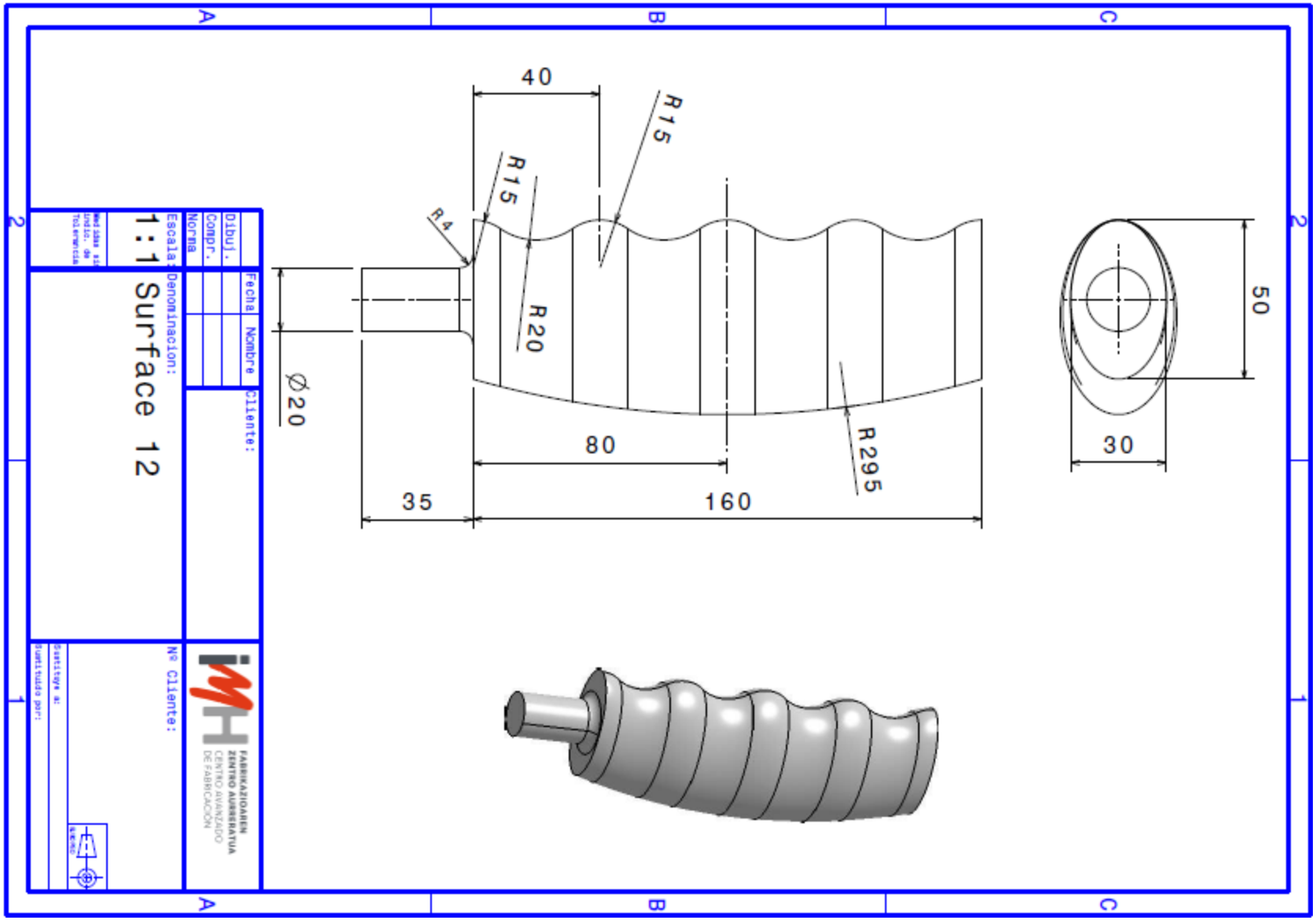

Basic design with CATIA V5

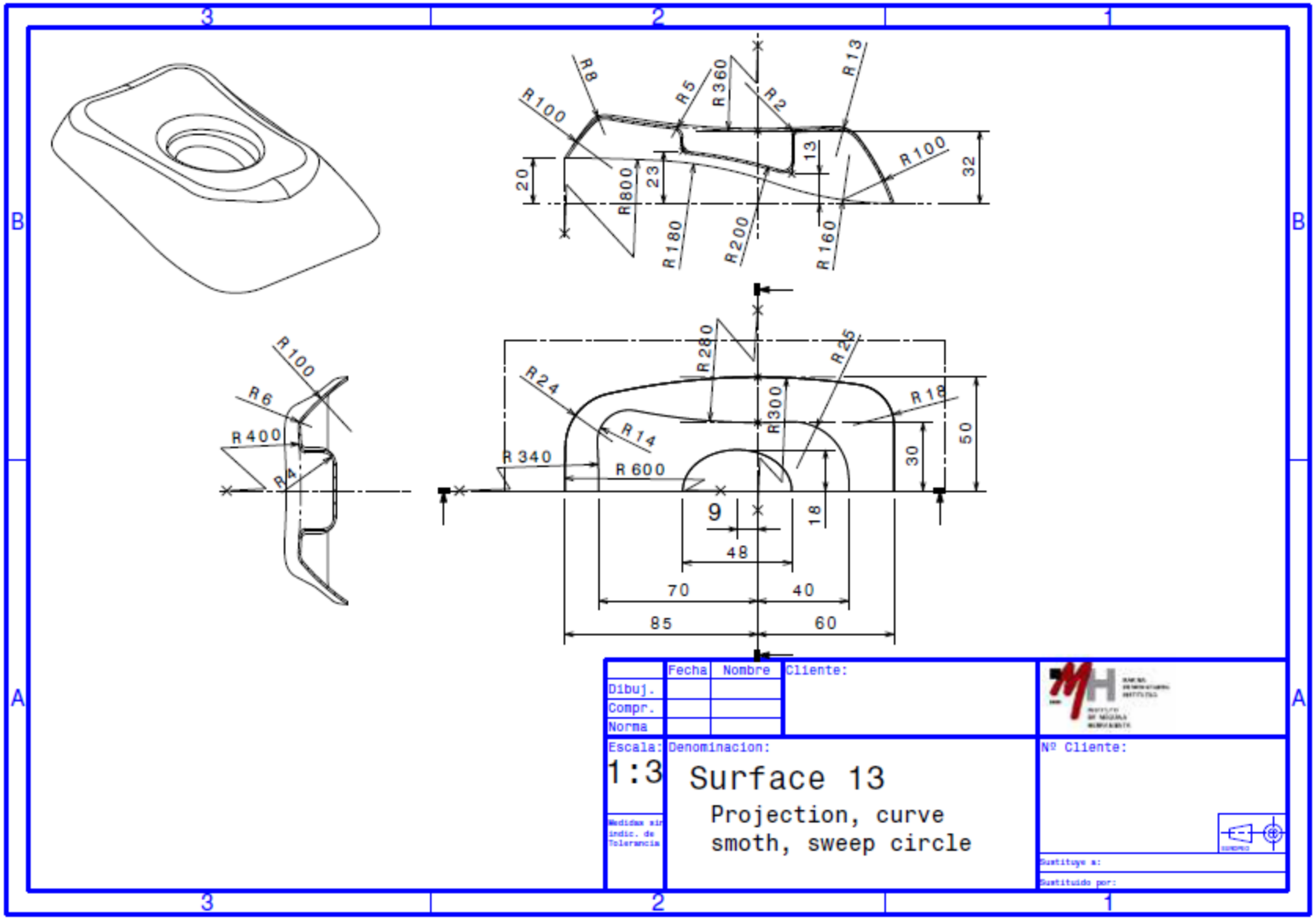

Basic design with CATIA V5

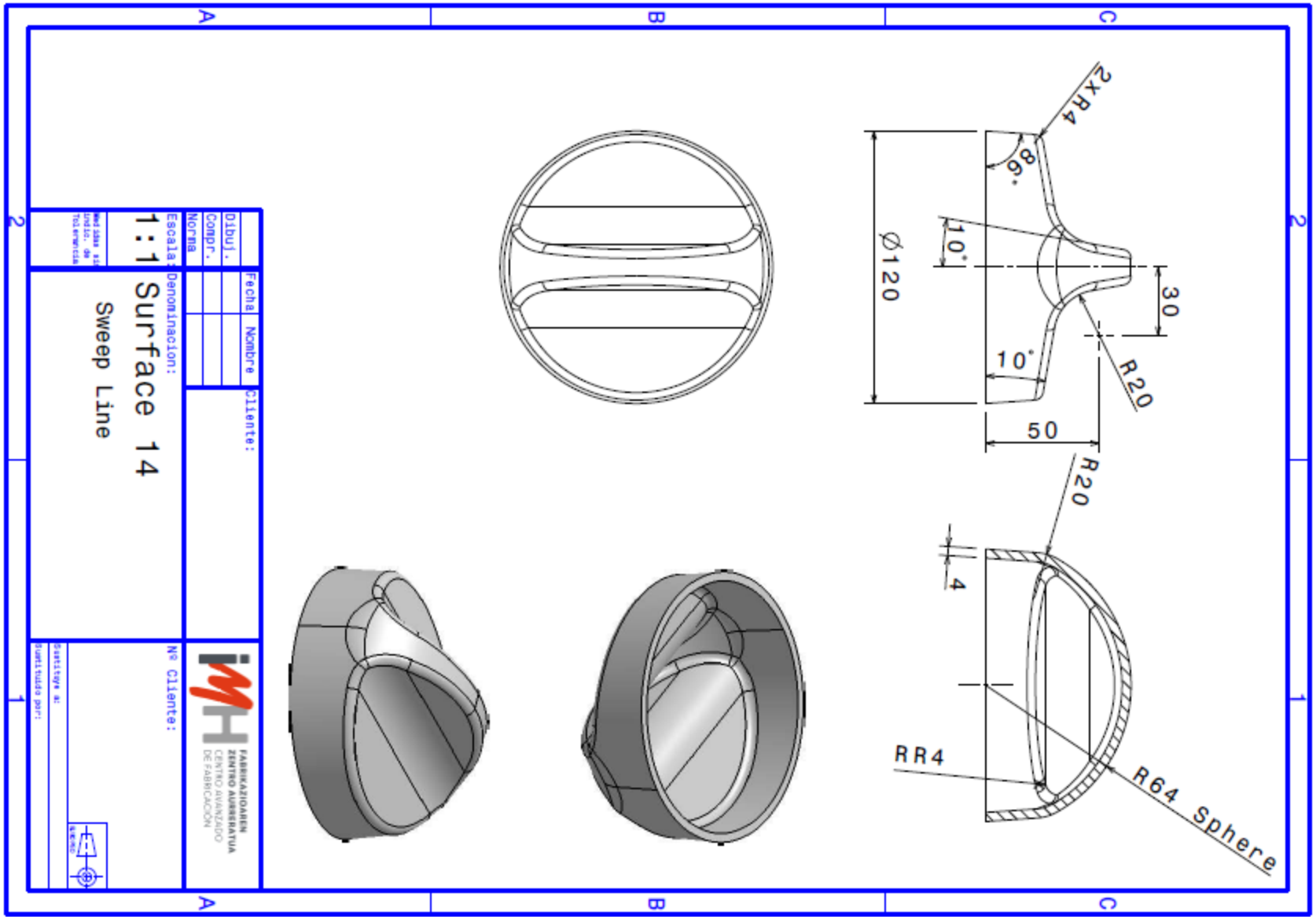

Basic design with CATIA V5

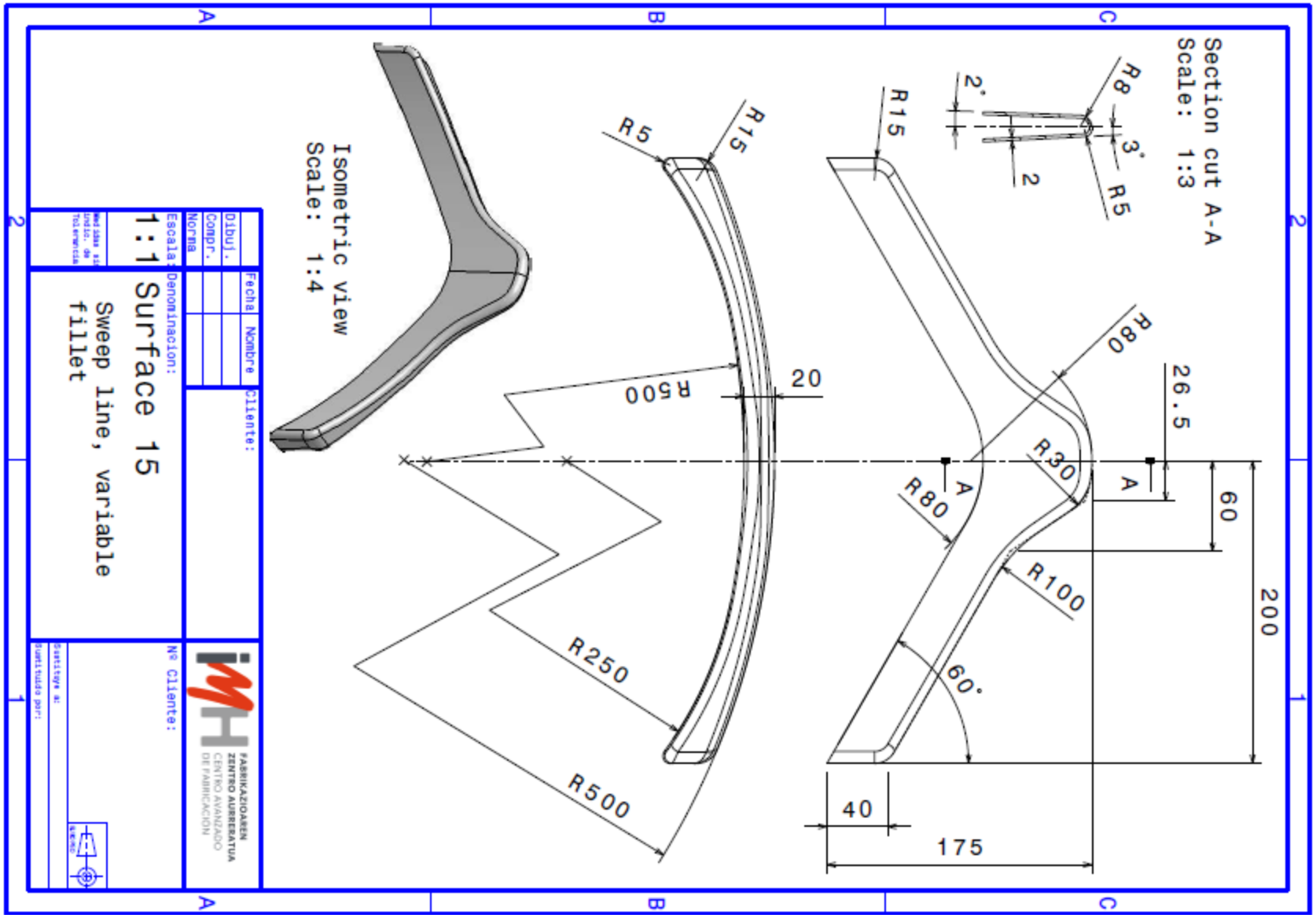

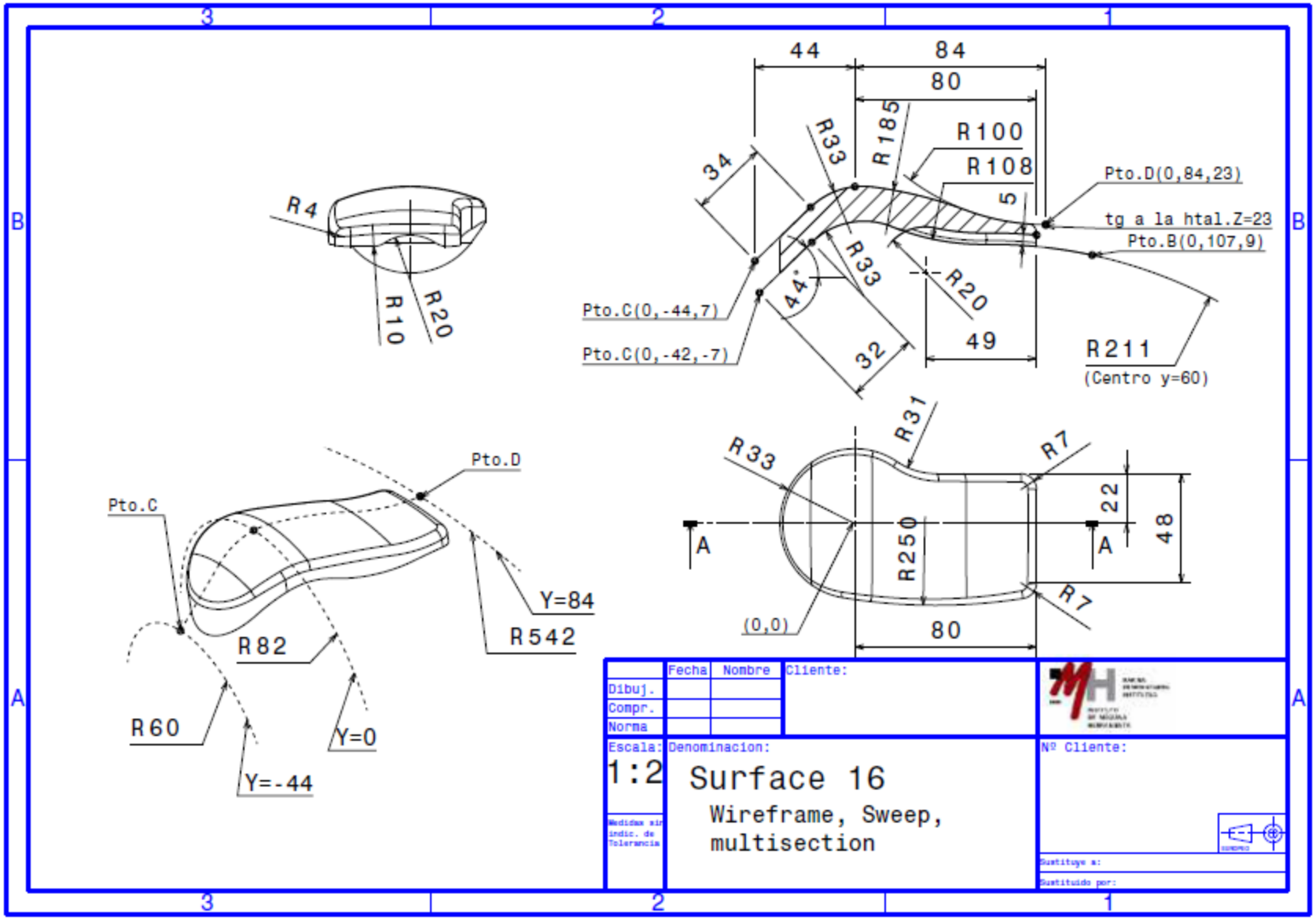

UPenAUTO : 2017-1-ES01-KA203-03858

Basic design with CATIA V5

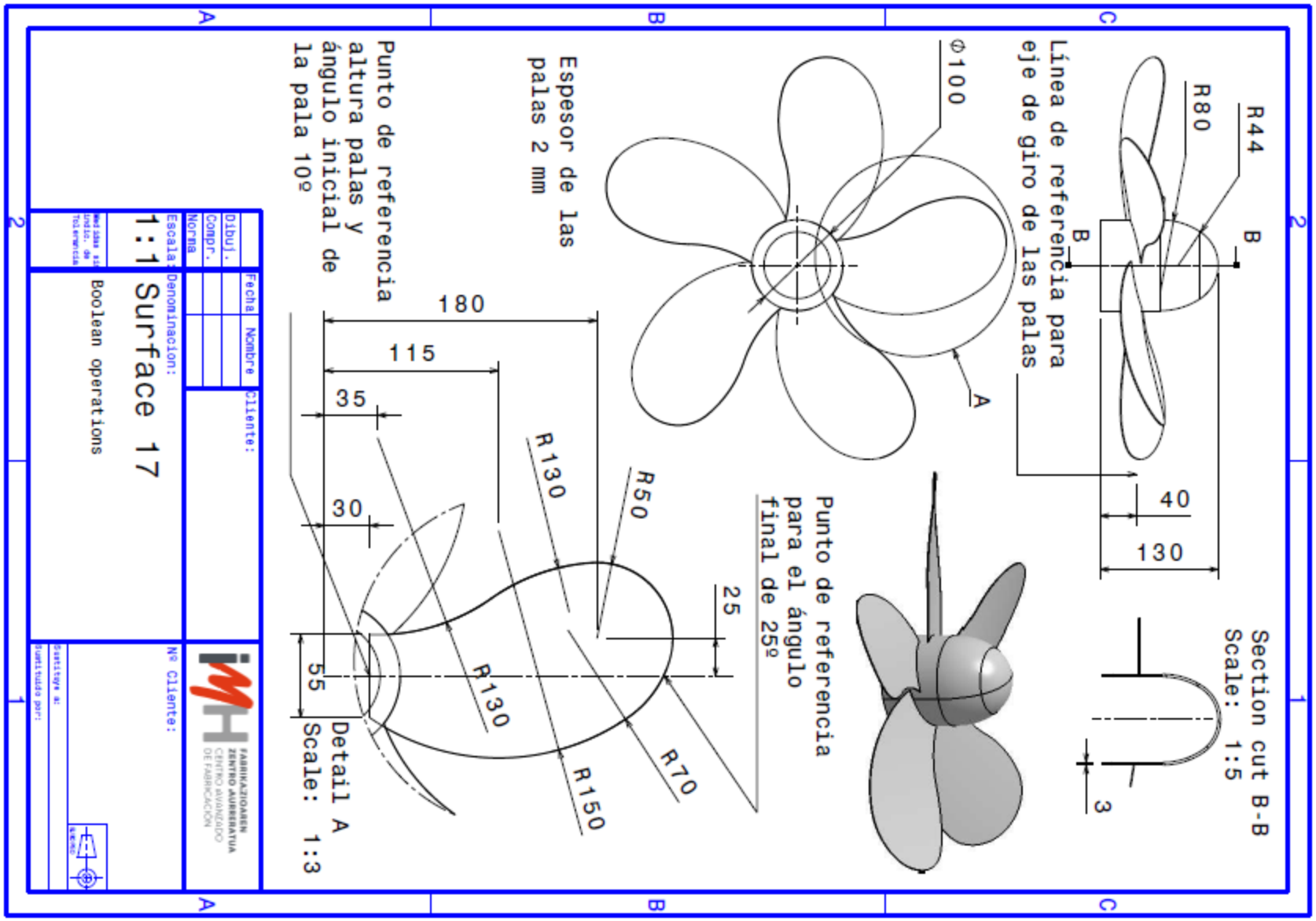

Basic design with CATIA V5

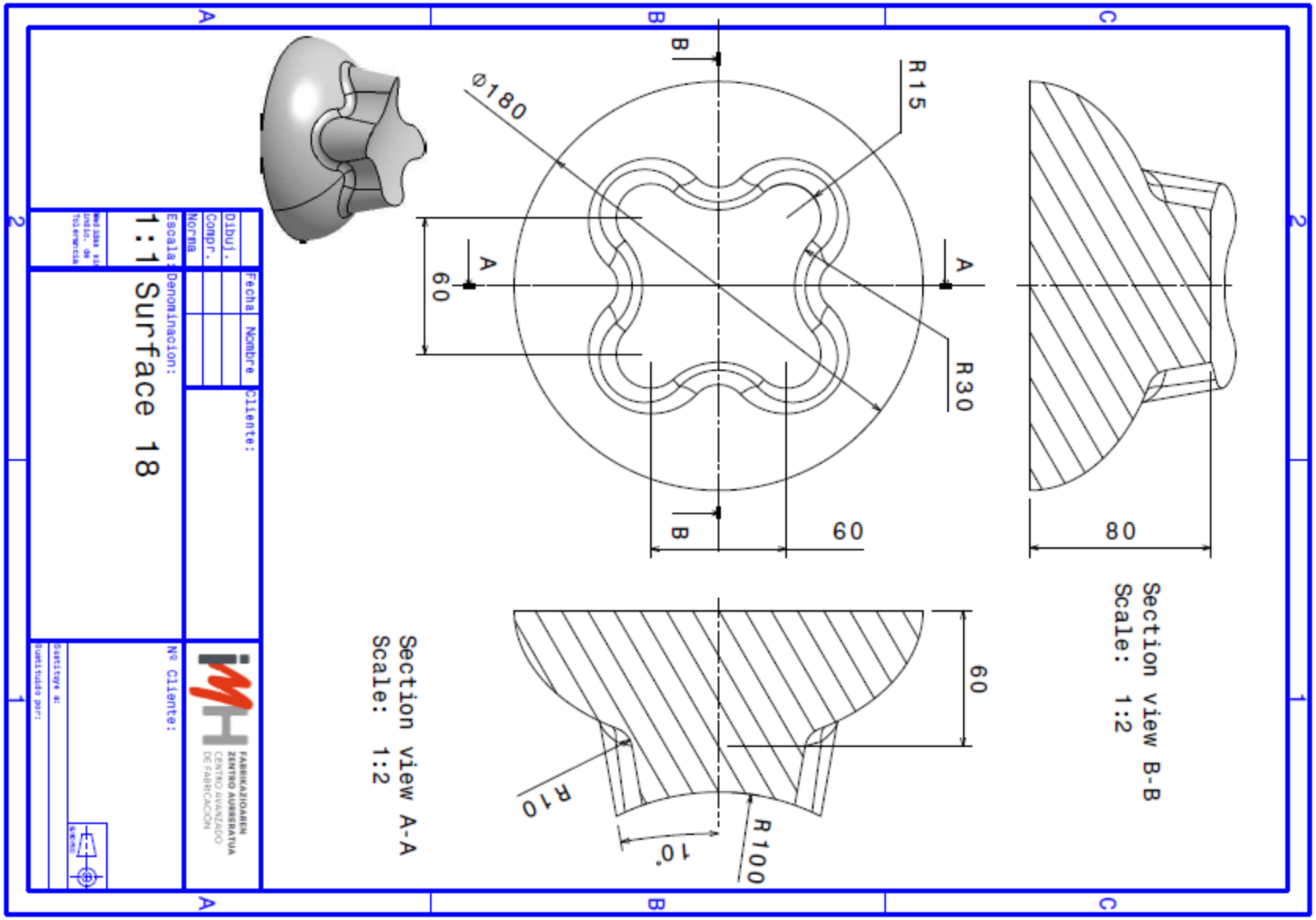

Basic design with CATIA V5

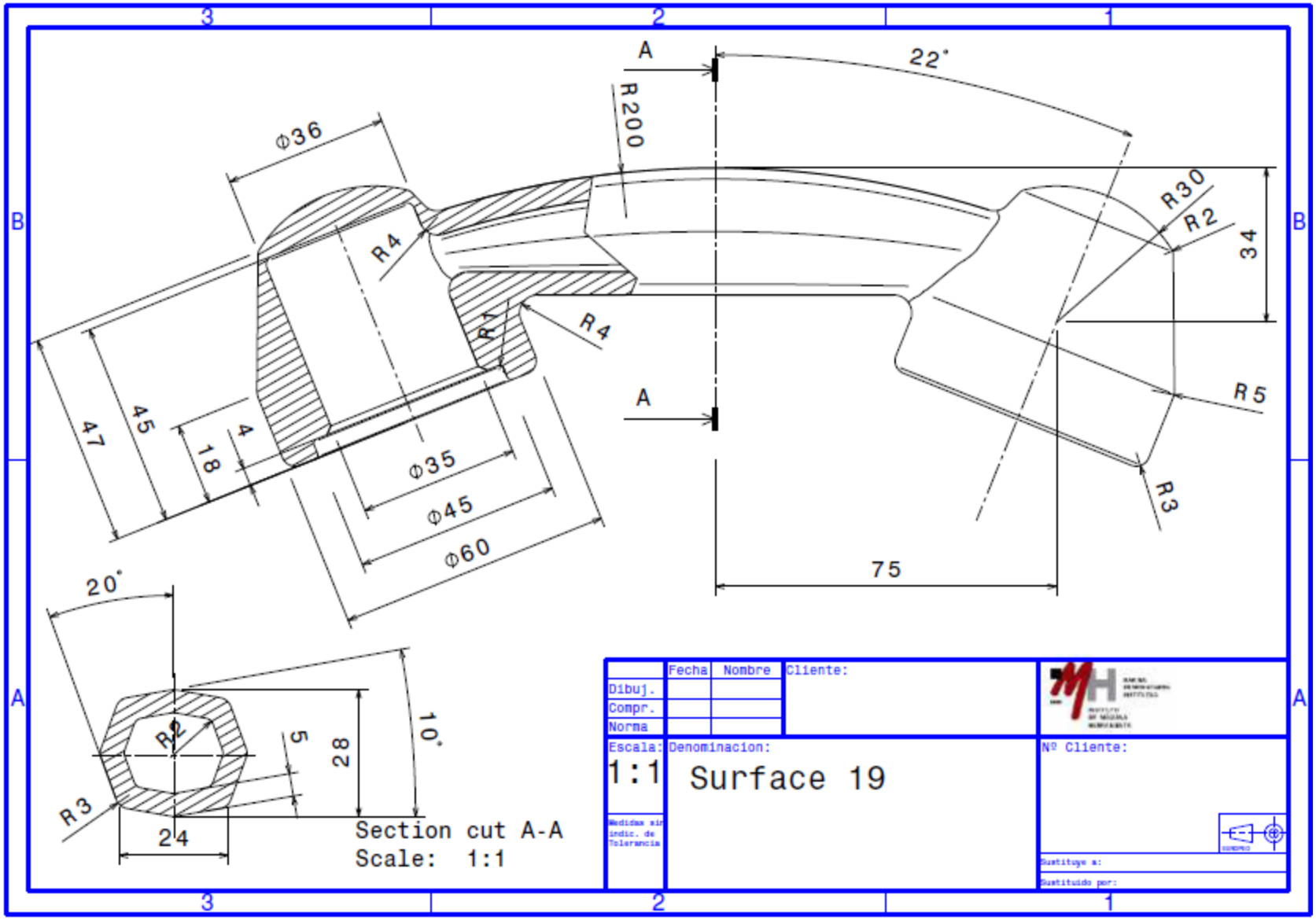

Basic design with CATIA V5

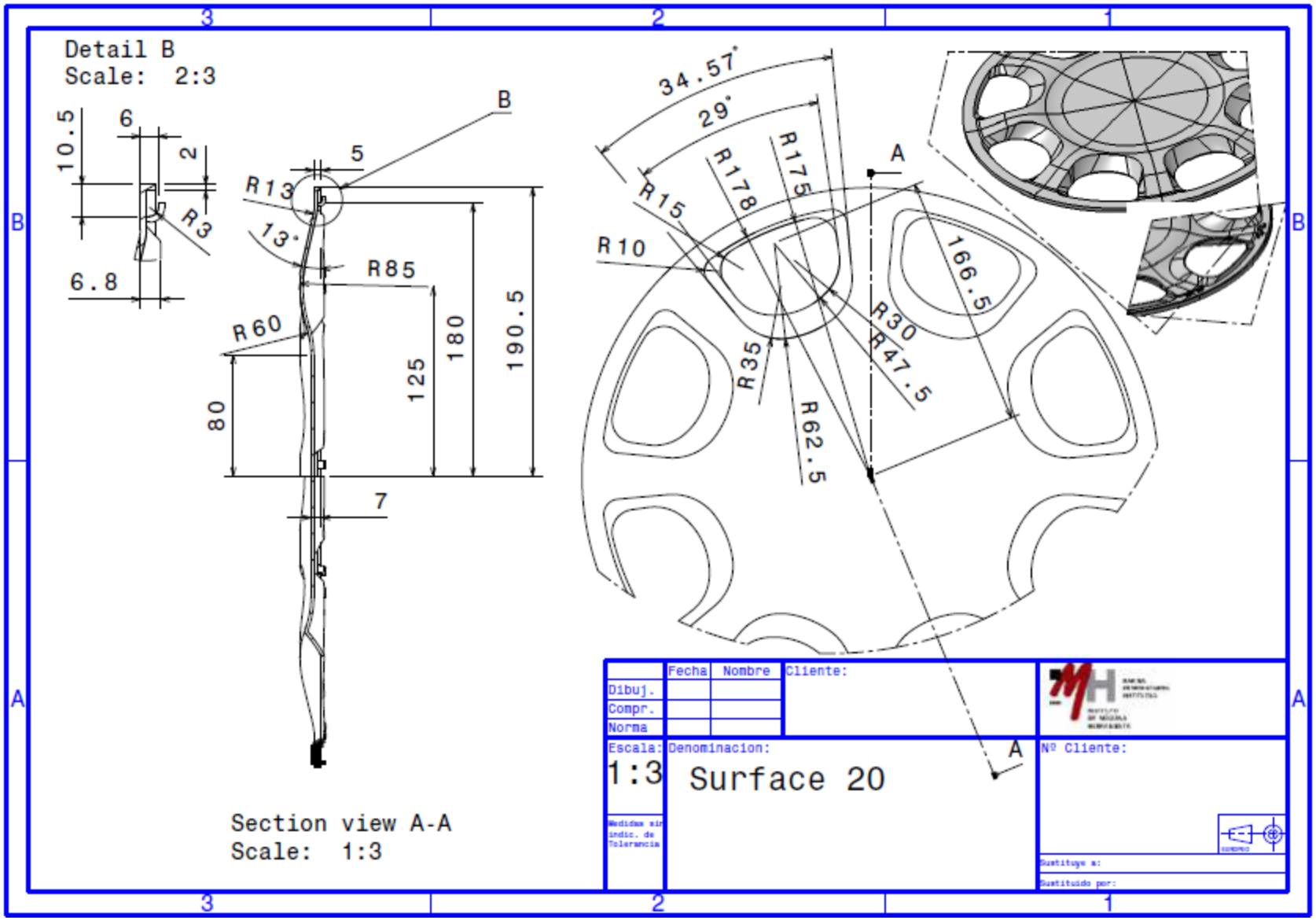

Basic design with CATIA V5 (60 h)

Practical Exercise

UPenAUTO : 2017-1-ES01-KA203-03858

Erasmus+

UPenAUTO: UPSKILLED ENGINEERING PROFILES FOR THE AUTOMOTIVE SECTOR AND UPTAKE OF ALTERNATE SCHEME IN EUROPE´S HIGHER EDUCATION.

Gestamp

GTI
GESTAMP TECHNOLOGY INSTITUTE

FABRIKAZIOAREN ZENTRO AURRERATUA
CENTRO AVANZADO DE FABRICACIÓN

somorrostro
centro de formación / irakas-gunea

UNIVERSITATEA POLITEHNICA

1.- Exercise 1

Using the knowledges acquired on surfaces during training, have to do the surface part represented in the following drawing. Limit time 2 hours.

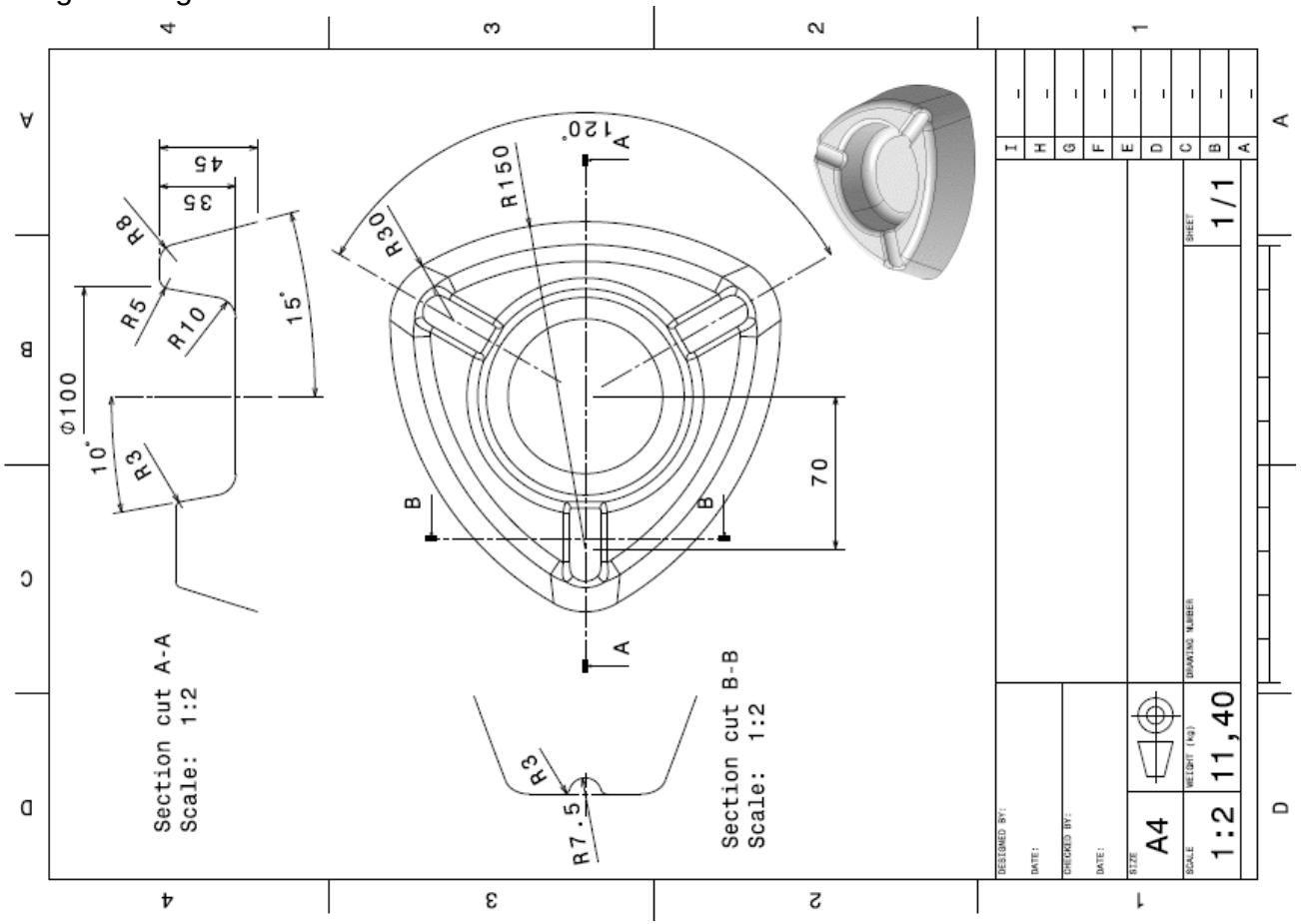

2.- Exercise 2

Is given a file with the surface of the picture. The student have to close the holes that have been numerated using surface tools. Time limit 6 hours.

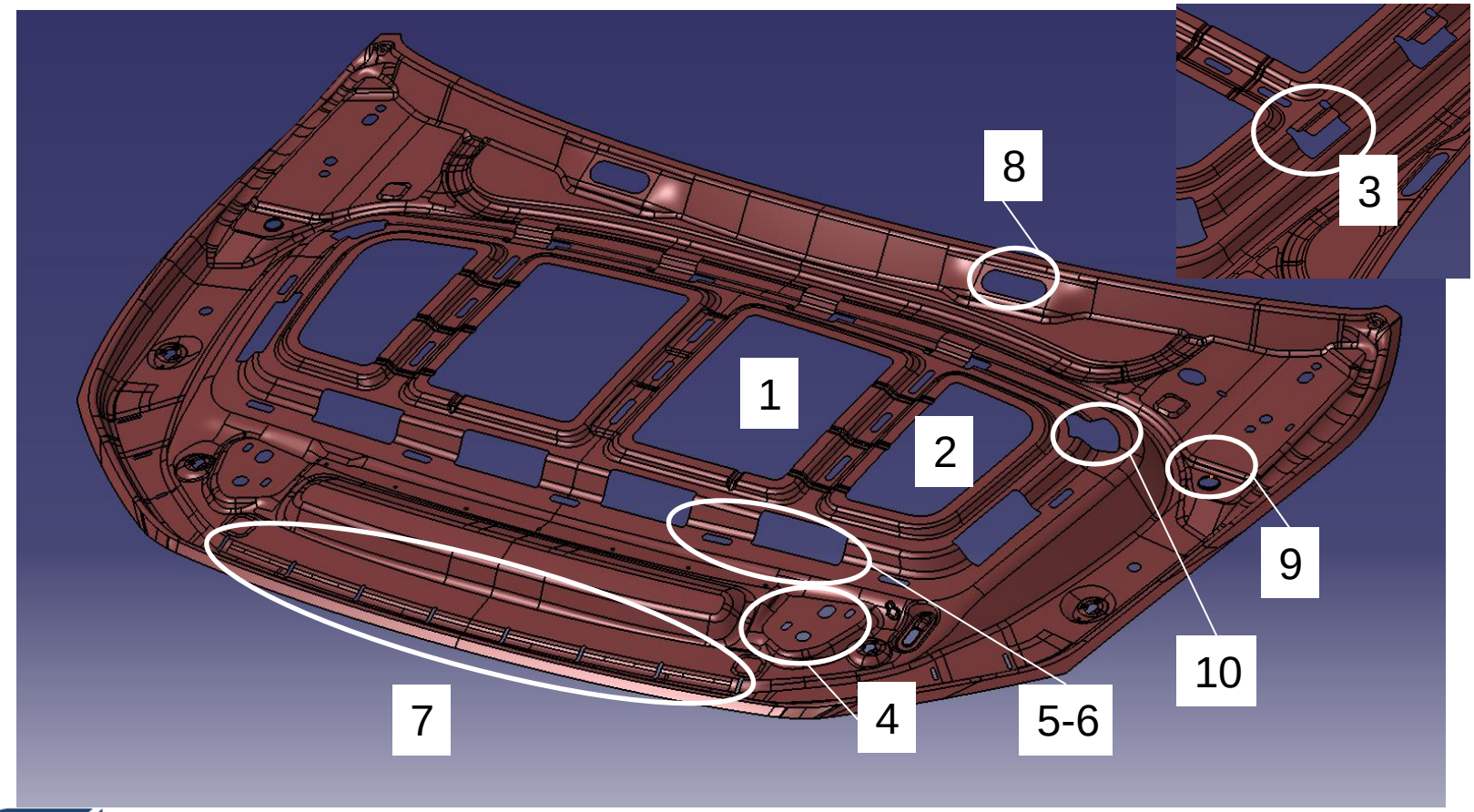

EVALUATION CRITERIA

- The evaluation criteria for the first exercise is:
  - The shape of the part is correct : 5 points
  - Sketch restricted: 3 points
  - Good organization of tree: 2 points

- The exercise 2 will be corrected with the next criteria :
  - The shape of the part is correct : 4 points
  - Good tangency surface : 2 points
  - Exercise clean and clear: 2 points
  - Good organization of tree : 2 points