Basic design with NX 12(60 h)

UPenAUTO : 2017-1-ES01-KA203-03858

Erasmus+

UPenAUTO: UPSKILLED ENGINEERING PROFILES FOR THE AUTOMOTIVE SECTOR AND UPTAKE OF ALTERNATE SCHEME IN EUROPE´S HIGHER EDUCATION.

Gestamp

GTI
GESTAMP TECHNOLOGY INSTITUTE

FABRIKAZIOAREN ZENTRO AURRERATUA
CENTRO AVANZADO DE FABRICACIÓN

somorrostro
centro de formación / irakas-gunea

UNIVERSITATEA POLITEHNICA

Introduction to NX

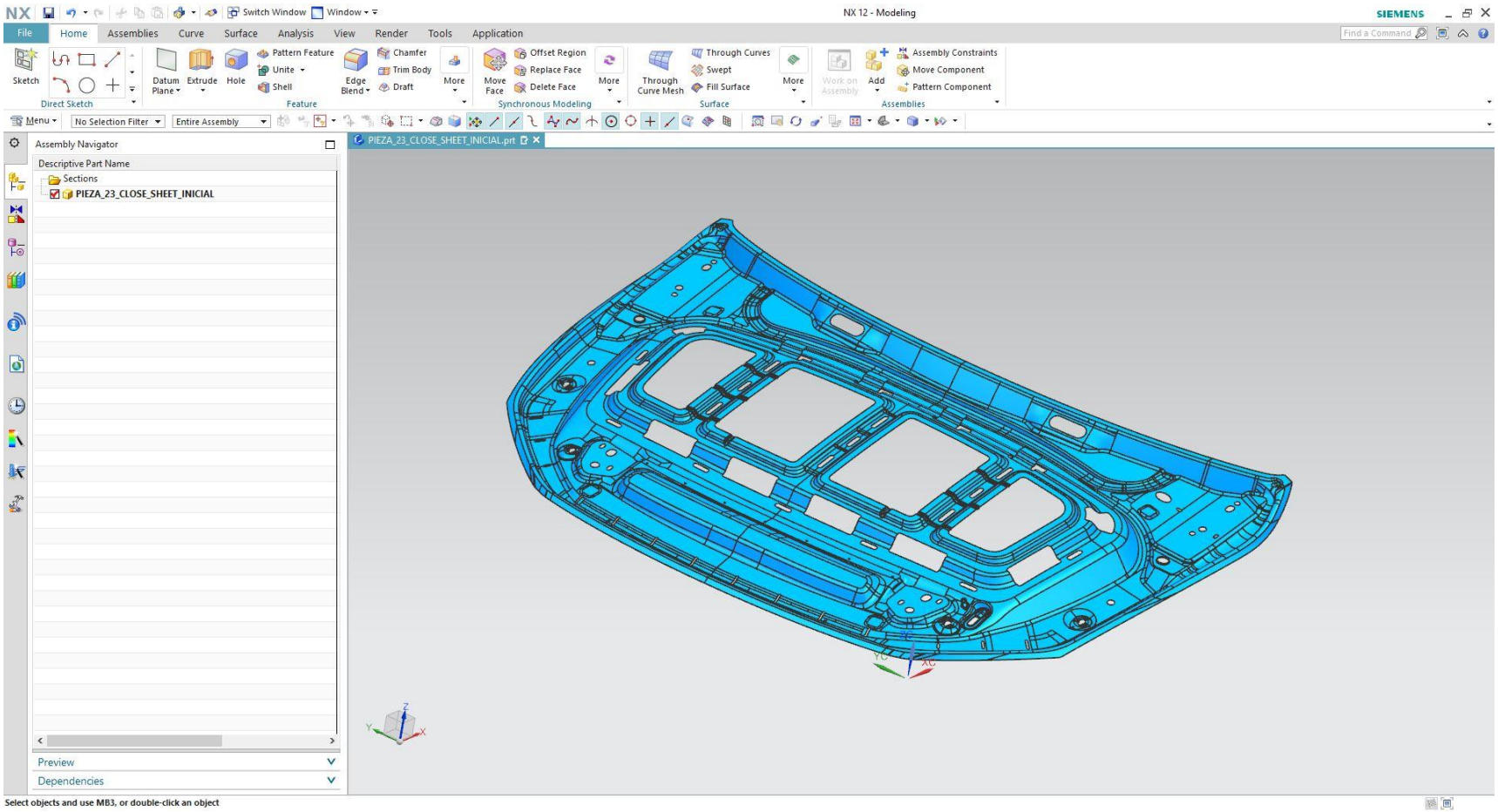

MAIN MENU

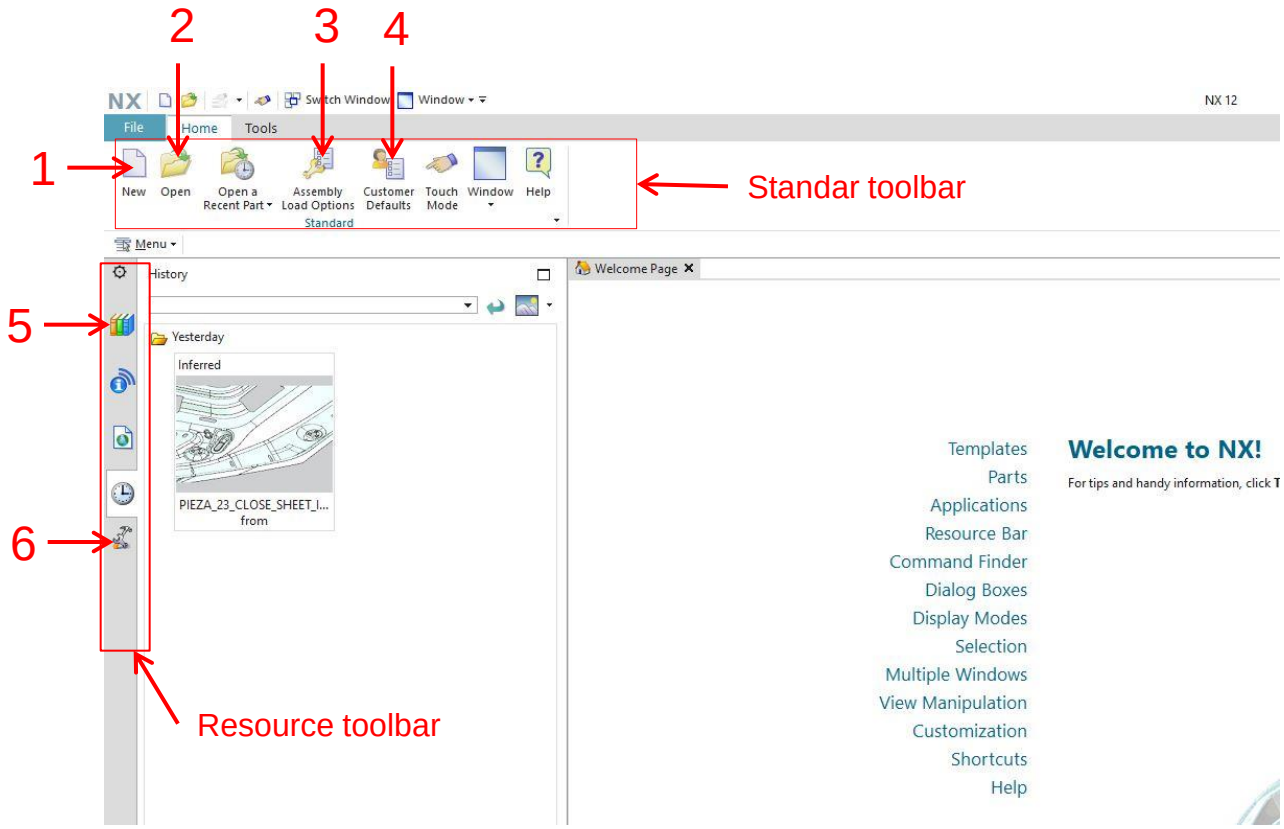

1 – Starting a new file (model, assembly, drawing…)

2 – Open an existing file

3 – Choose from which folders you want NX to load your files

4 – All internal settings of the program

5 – NX library

6 – NX Roles, here you can customize all the working toolbars, and save them as a preset

NEW FILE

In this course we are going to focus in the Model and Drawing tabs. With this tabs you can create 3d models, assemblies and drawings

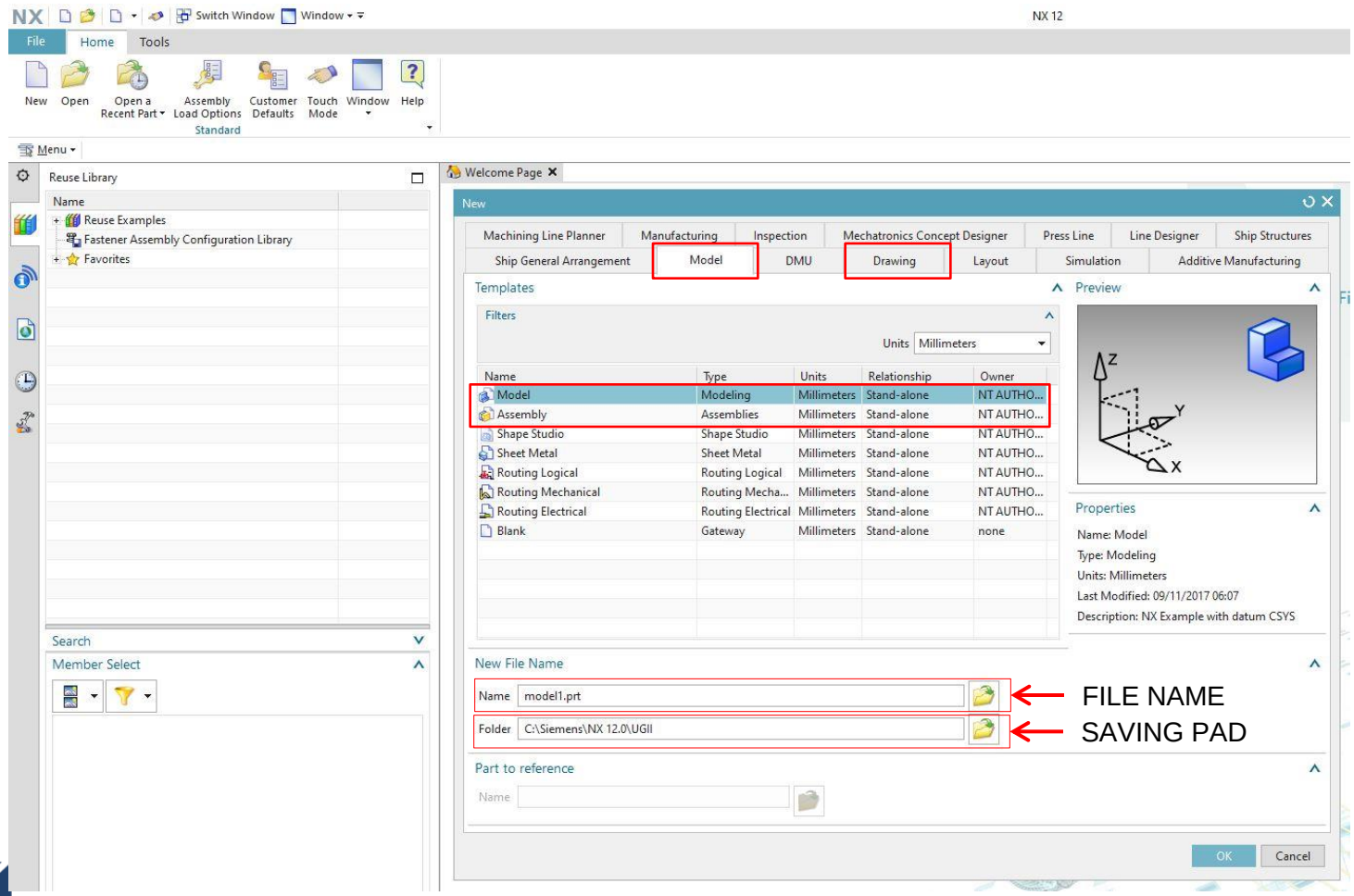

USER INTERFACE

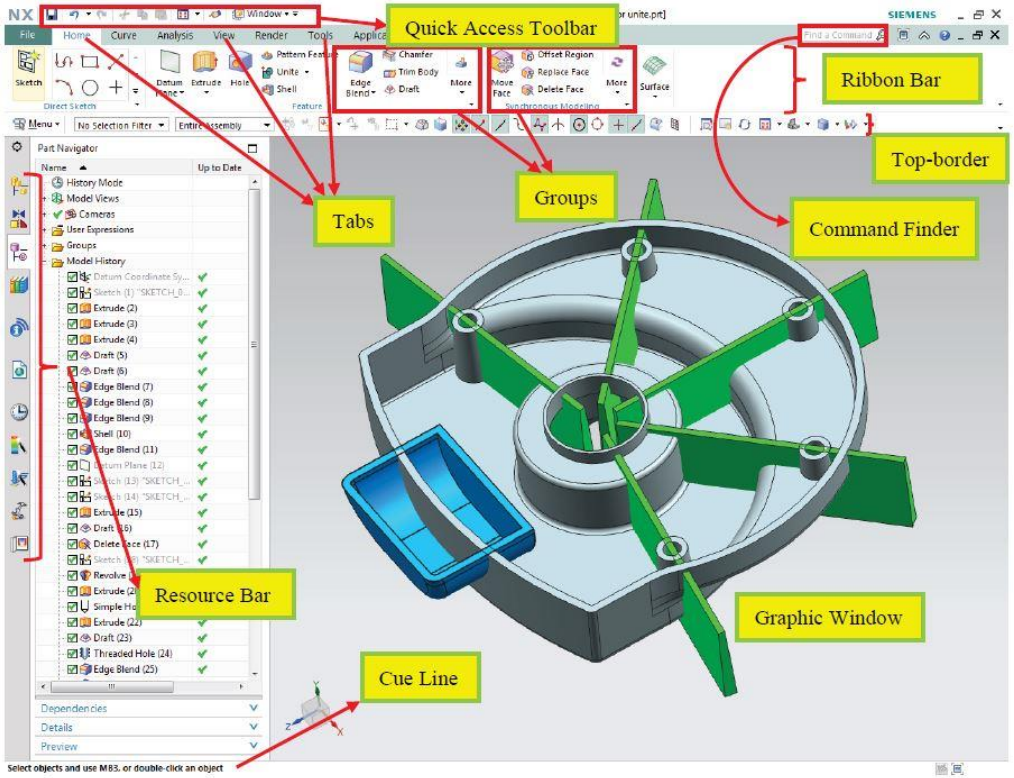

The ribbon bar interface gives the user the ability to access the different commands easily without reducing the graphics window area. Commands are organized in ribbon bars under different tabs and groups for easy recognition and accessibility

The quick access toolbar has most commonly used buttons (save, undo, redo, cut, copy, paste and recent commands) to expedite the modeling process

Use the command finderr If you do not know where to find a command f.e
Type **sweep** in the *Command Finder* and NX will show you the path to the command: **Menu →Insert →Sweep →Styled Sweep**

Top border, Most of the features and functions of the software are available in the *menu.* These bar also includes the *Filters, Components/Assembly,* and *Snap Points* for selecting features

The *Resource Bar* features icons for a number of pages in one place using very little user interface space. The most important ones are the assembly navigator, the constrains navigator and he part navigator. The first 3 starting from the top

VIEW AND HIDE TABS

Rigth click on the top gray bar and check or uncheck the tab that you want to show or hide

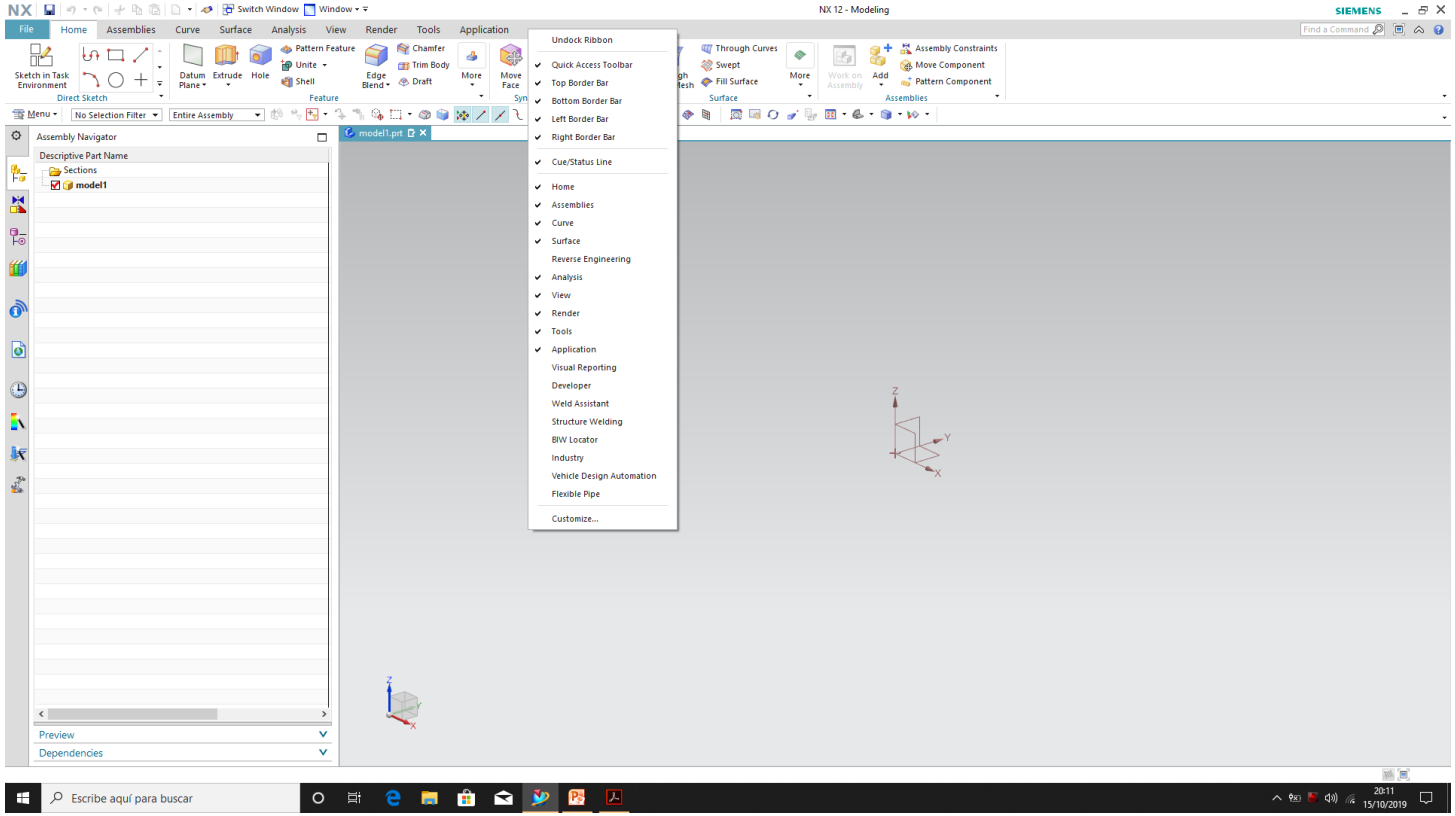

TYPE OF DOCUMENT

NX doesn't make any difference between models, assemblies or drawings, all those files extensions are .prt, the only way to recognize which type of document are you using is by the name of the file. For example:

If it's a model, the name you choose

If it's an assembly, the name you choose_ASSY

If it's a drawing, the name you choose_DRW

CHANGE THE VIEW WITH THE MOUSE

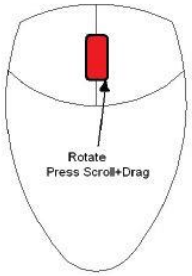

Scroll the wheel up or down for zooming

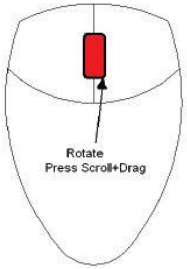

Press the middle button for rotating the model

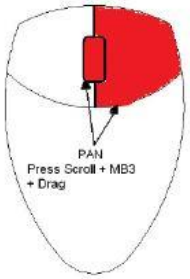

Press the middle button + rigth click for panning

RENDERING STYLES

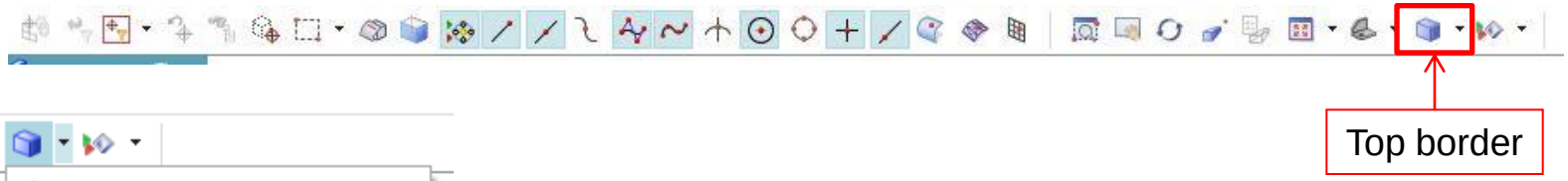

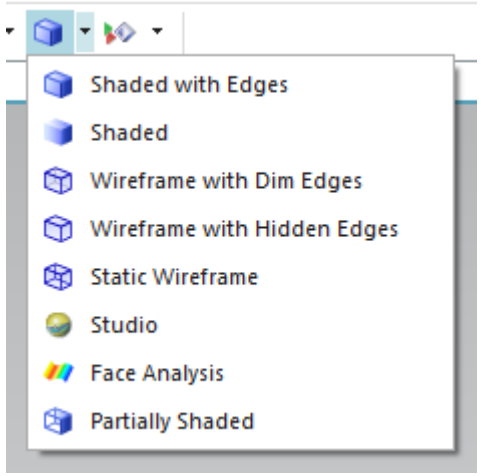

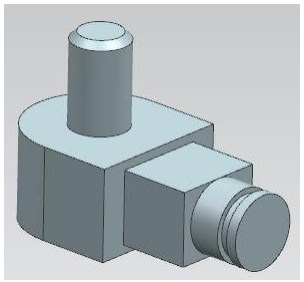

Shaded with edges

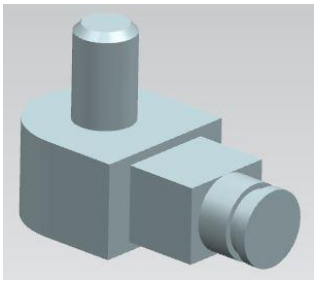

Shaded

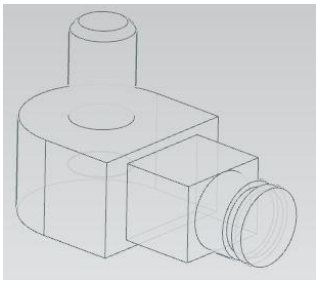

Wireframe with dim edges

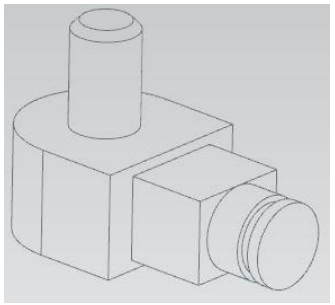

Wireframe with hidden edges

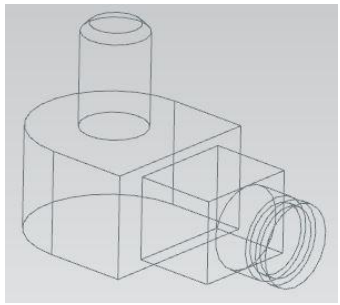

Static wireframe

AXIS SYSTEM'S

There are 3 different coordinate systems in NX. A three-axis symbol is used to identify the coordinate system.

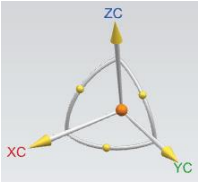

1 – Datum axis system: Is the most common one, the one that you are going to use to support all your sketches an link all the things you want

2 – Work coordinate system (wcs): this one is known as the imaginary system, you can show or hide it with the 'w' key. is what you will use for construction when you want to determine orientations and angles of features.

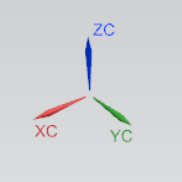

3 – Absolut axis system is the coordinate system from which all objects are referenced. This is a **FIXED** coordinate system and the locations and orientations of every object in NX 12 modeling space are related back to this system. It is invisible but is always there, normally you create a datum in the position of the absolute coordinate system and never move it, son you know where the absolute coordinate system is.

CREATING A SKETCH

In NX 12 you can create sketches in two ways. The first method creates the *Sketch* in the current environment (Direct sketch) and the second one takes you to an environment where the toolbars are only refered to sketch operations (Sketch in task environment), either way, the pop-up menu is the same for both of them.

Environment with direct sketch

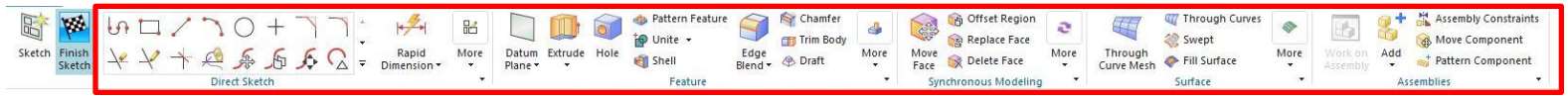

Environment with sketch in task environment

Sketch pop-up menu

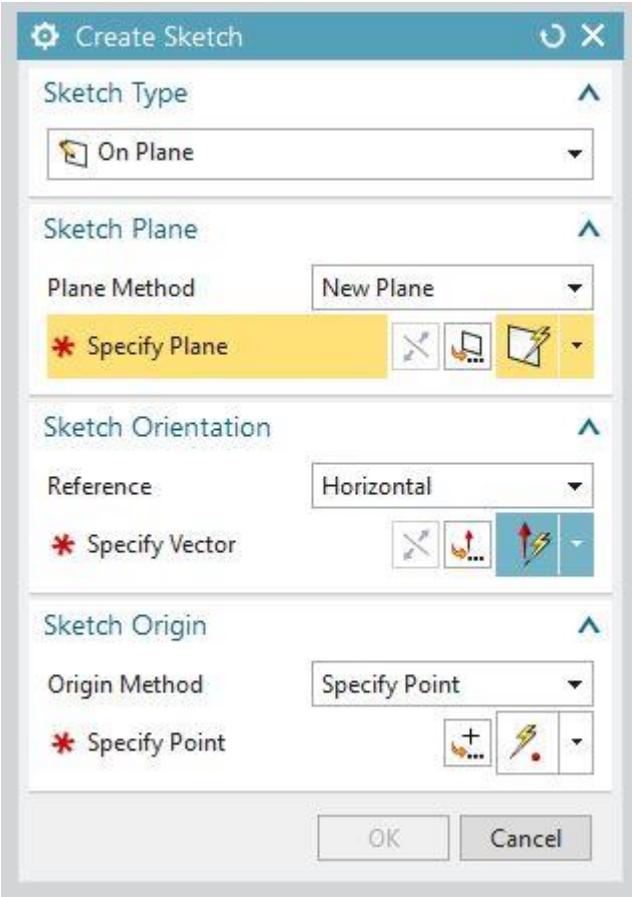

Select your plane

Select your x vector

Select your origin point

SKETCH TOOLBARS

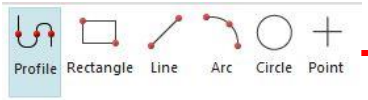

Basic operation commands

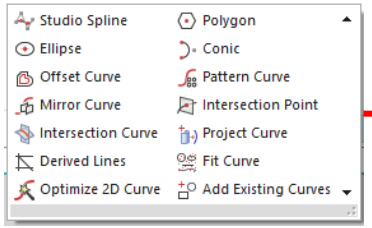

More curve commands

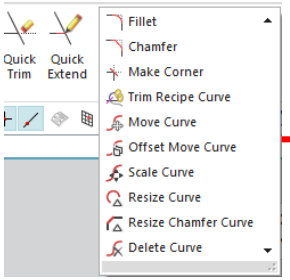

For editing existing curves

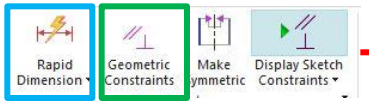

Constraining the sketch

Dimension constrains

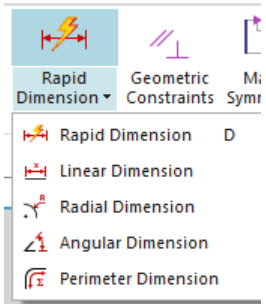

Geometric constrains

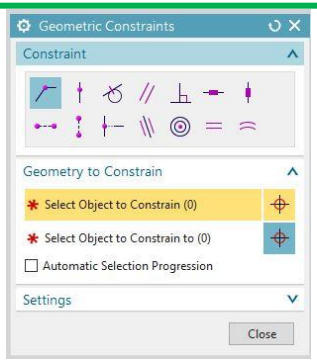

CONSTRUCTION GEOMETRY

Construction geometry is created within a sketch to aid in profile creation. Unlike standard geometry, it does not appear outside the sketcher workbench

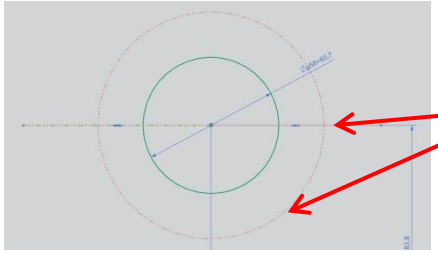

Construction geometry

There are 2 ways of creating constructioin geometry

1- selecting the line, and in the pop up menu in the graphic window click on the appropriate icon.

2- selecting the line, and in the sketching toolbar clicking in the appropriate icon

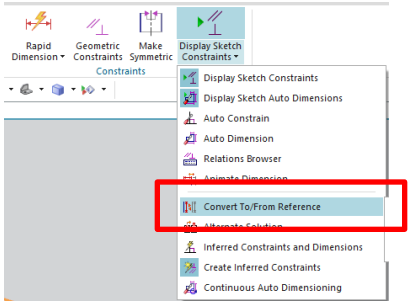

SKETCH ASSISTANT

NX have in the top bar some filters that will help you with the sketches, snapping the cursor to the end of the line, to the middle of a line, tangent to a circle, depending witch icon you have activated or not.

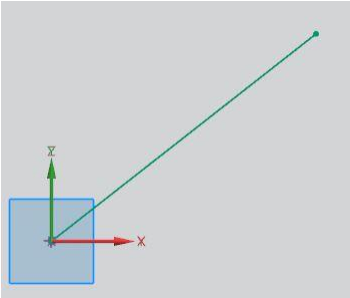

Line in a sketch

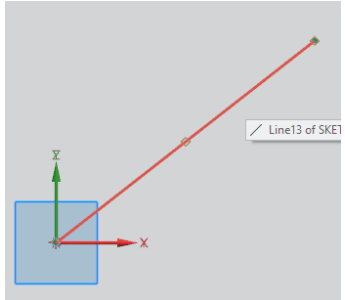

When the cursor is over a line will turn red

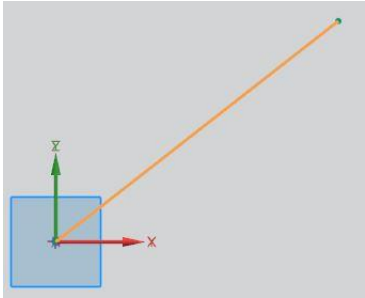

When you select an object will turn orange

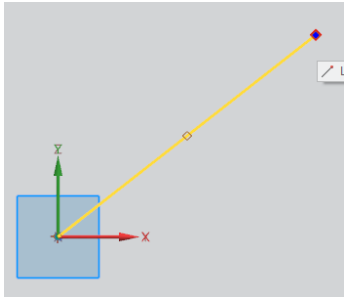

When you go over a line, and depending on which filters you activated, the cursor is going to snap to one of those point, turning into a yellow line and highlighting that point

UPenAUTO : 2017-1-ES01-KA203-03858

COLOR AND DIAGNOSTIC

1- Brown: under-constrained
2- Green: fixed/fully constrained
3-Red/grey: over-constrained

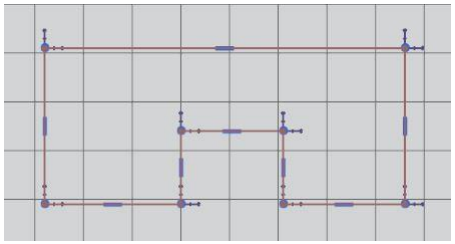

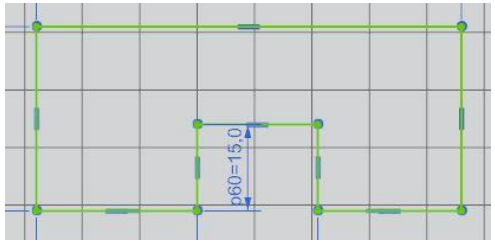

In NX only case 1 and 2 are allowed, if you are in case 3, you will have to fix it, if not when you finish the sketch is going to give you and error.

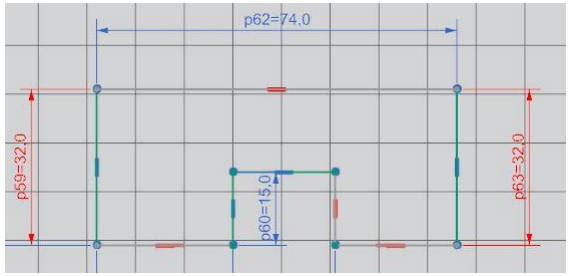

Note: To be able to see the colors, you will have to click in one of the icons of the constrains tab

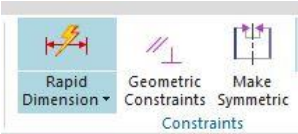

VIEW ORIENTATION

By default, the screen is parallel to the sketch support

Sometimes you will rotate the view in 3D space, so you can make constrains with some edge of the solid, or just by accident

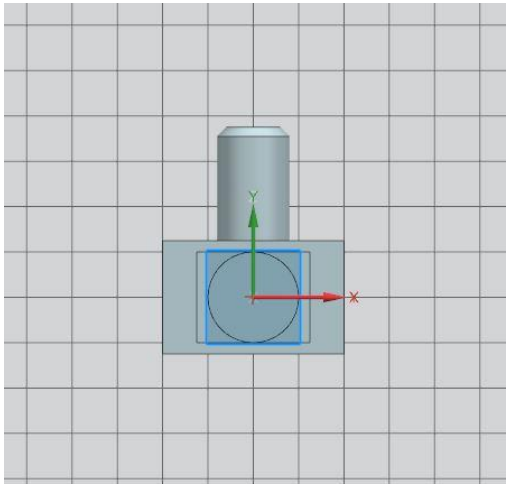

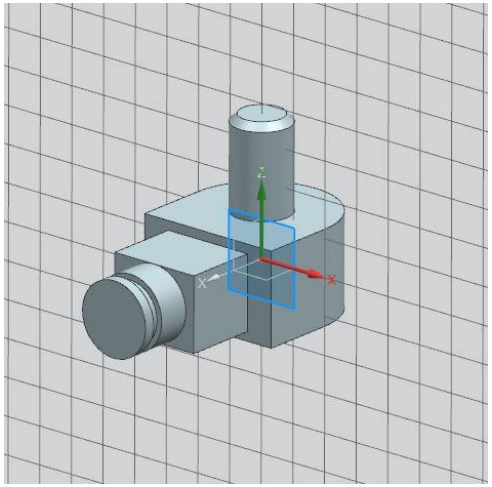

To return to the normal view the fastest way is pressing the F8 of the keyboard. The F8 turns the view parallel to the nearest orthogonal position.

EXITING THE SKETCH

To exit the sketch workbench select, the finish icon

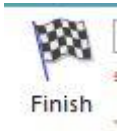

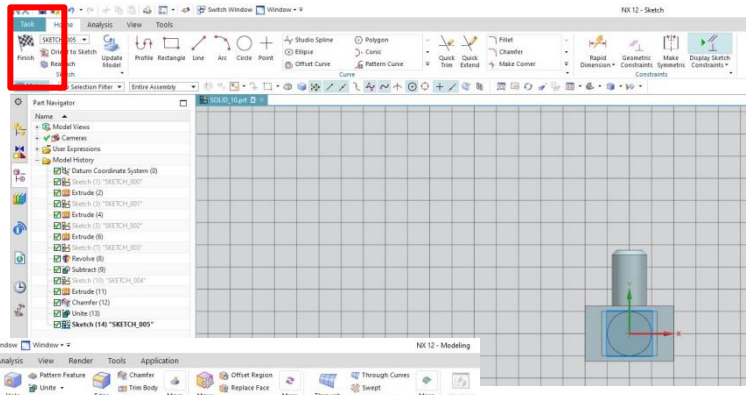

After that, the screen will be back to the 3D view and the workbench will be switched back to the original

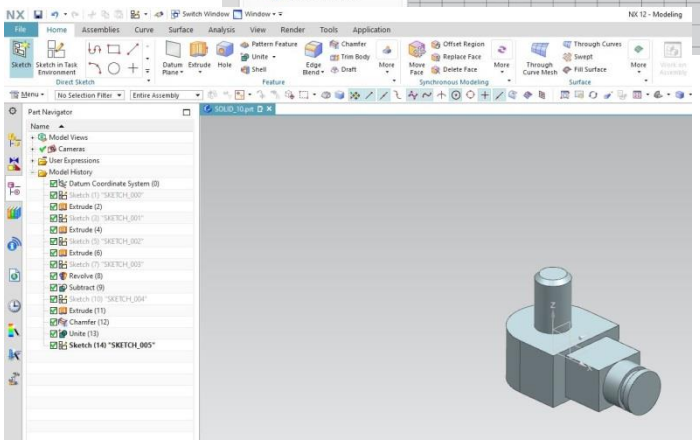

Sketching Exercises

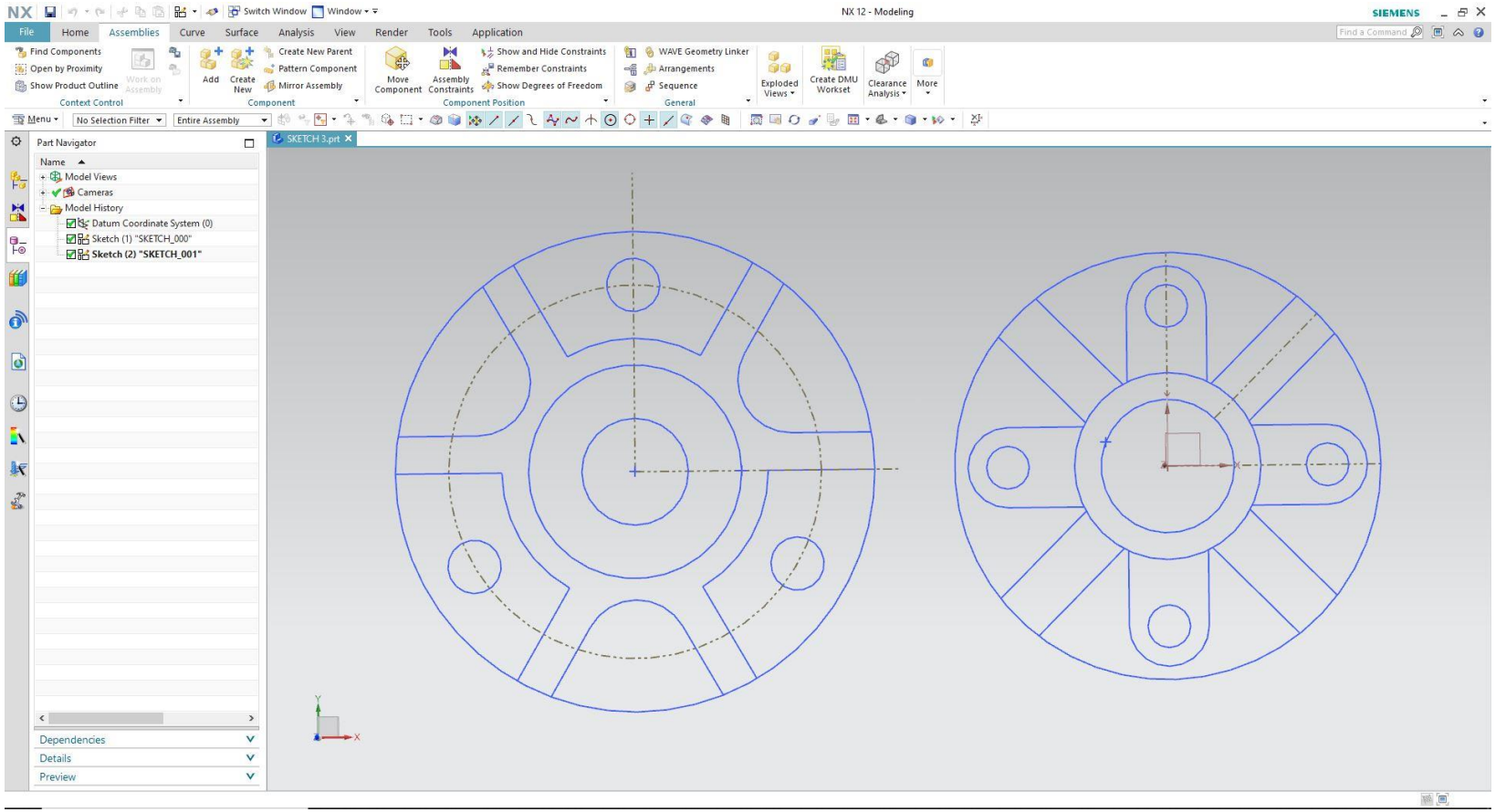

Basic design with NX 12

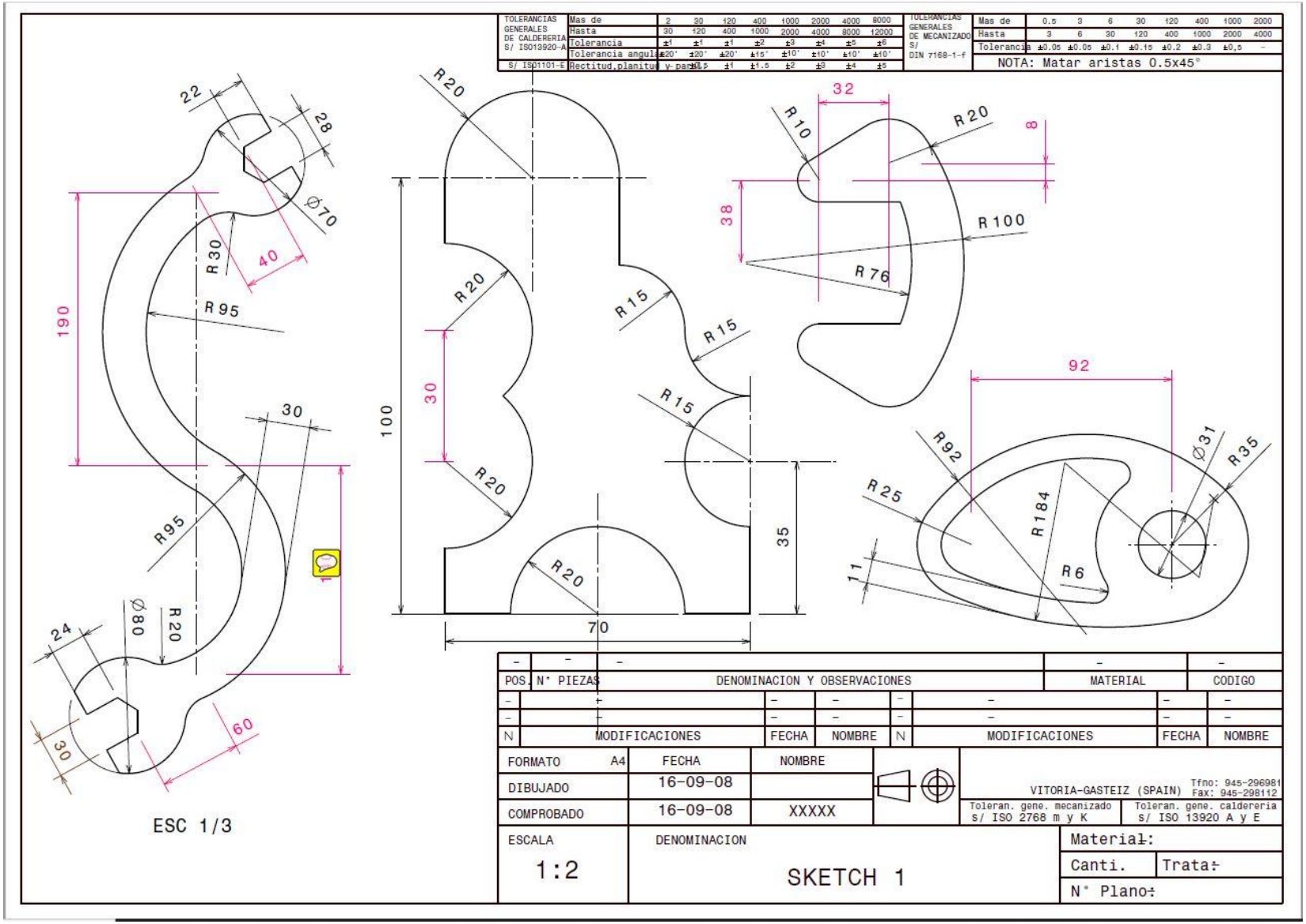

Basic design with NX 12

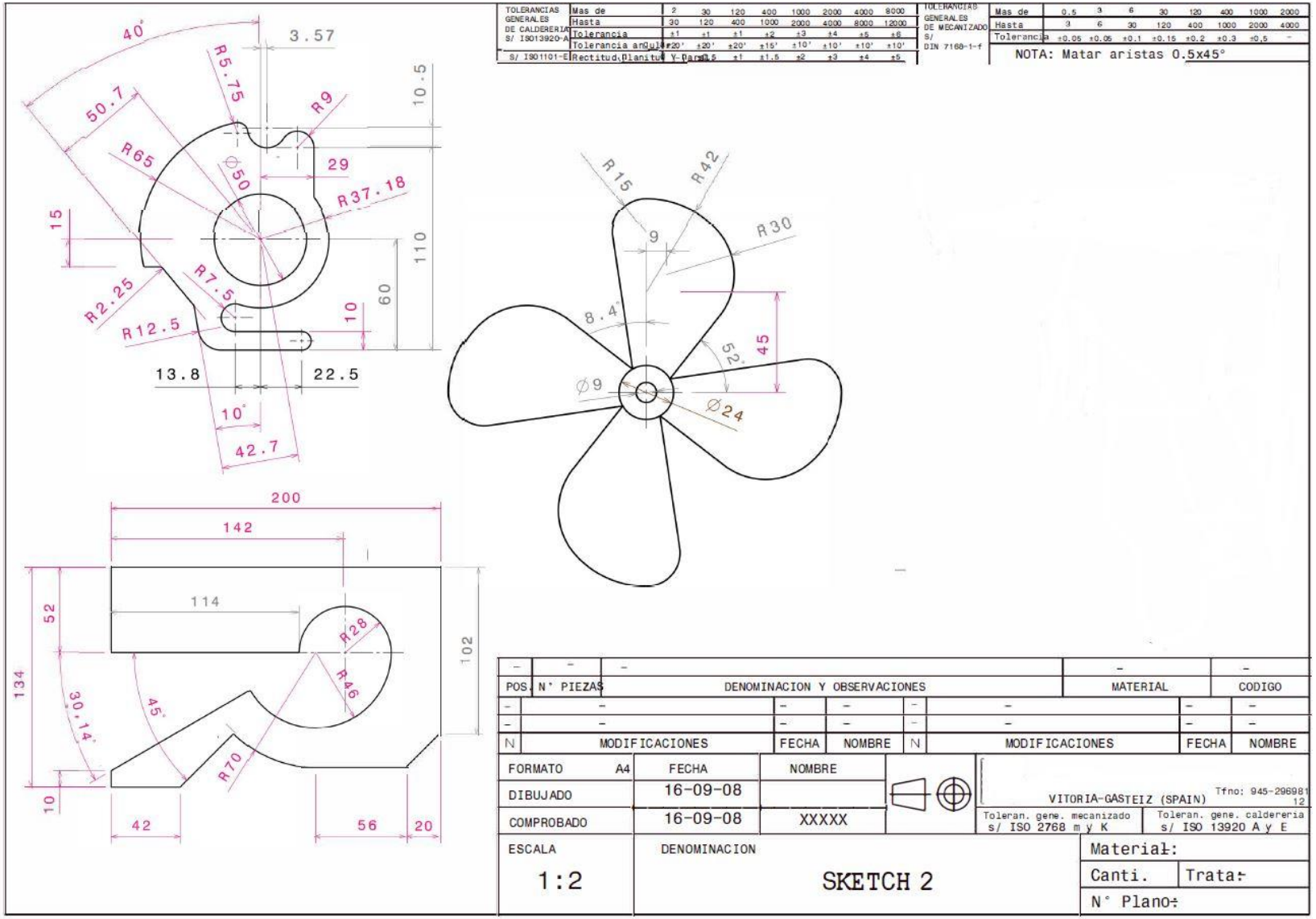

Basic design with NX 12

TOLERANCIAS GENERALES DE CALDERERIA S/ ISO13920-A	Mas de	2	30	120	400	1000	2000	4000	8000
	Hasta	30	120	400	1000	2000	4000	8000	12000
	Tolerancia	±1	±1	±1	±2	±3	±4	±5	±6
	Tolerancia angular	±20'	±20'	±20'	±15'	±10'	±10'	±10'	±10'
S/ ISO1101-E	Rectitud,planitud y paralelismo	±0.5	±1	±1	±1.5	±2	±3	±4	±5

TOLERANCIAS GENERALES DE MECANIZADO S/ DIN 7168-1-f	Mas de	0.5	3	6	30	120	400	1000	2000
	Hasta	3	6	30	120	400	1000	2000	4000
	Tolerancia	±0.05	±0.05	±0.1	±0.15	±0.2	±0.3	±0,5	–

NOTA: Matar aristas 0.5x45°

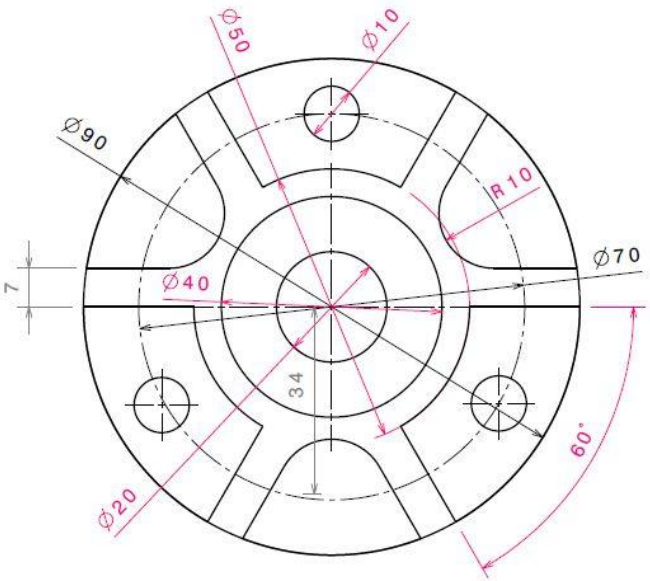

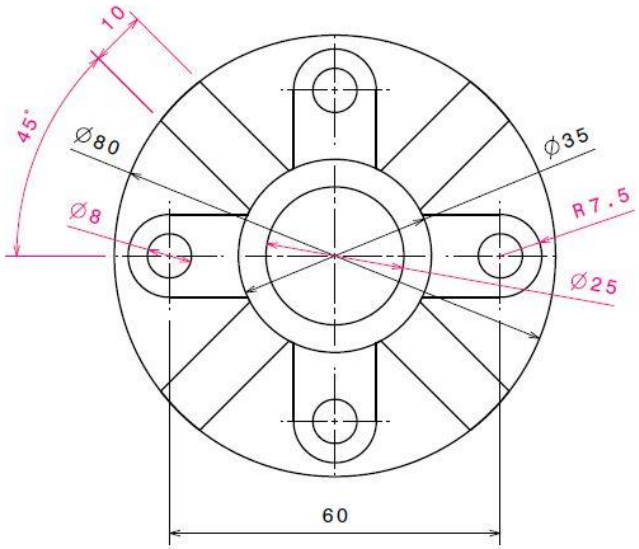

POS.	N° PIEZAS	DENOMINACION Y OBSERVACIONES	MATERIAL	CODIGO
–	–	–	–	–

N	MODIFICACIONES	FECHA	NOMBRE	N	MODIFICACIONES	FECHA	NOMBRE
–	–	–	–	–	–	–	–
–	–	–	–	–	–	–	–

FORMATO A4	FECHA	NOMBRE
DIBUJADO	07-08-05	
COMPROBADO	07-08-05	XXXXX

VITORIA-GASTEIZ (SPAIN) Tfno: 945-296981 Fax: 945-298112

Toleran. gene. mecanizado s/ ISO 2768 m y K

Toleran. gene. caldereria s/ ISO 13920 A y E

ESCALA	DENOMINACION	Material:
1:1	SKETCH 3	Canti. / Trata:
		N° Plano:

SOLIDS

To create a solid, we will begin creating a new file and under the tab model we will select model, after that we will be in the start interface.

To build a 3D model we will use this form features:

- **Primitives:** They let you create a solid bodie in the form of generic building shapes. Primitives include: Block, Cylinder, Cone and sphere.

- **Reference features:** These features let you create reference planes or reference axes. These references can assist you to create any kind of geometry.

- **Swept features:** These features let you create bodies by extruding or revolving sketch geometries.

- **Remove features:** Remove Features allows you to create bodies by removing solid parts from the original solid.

You can find all this features in the home tab in the upper left corner

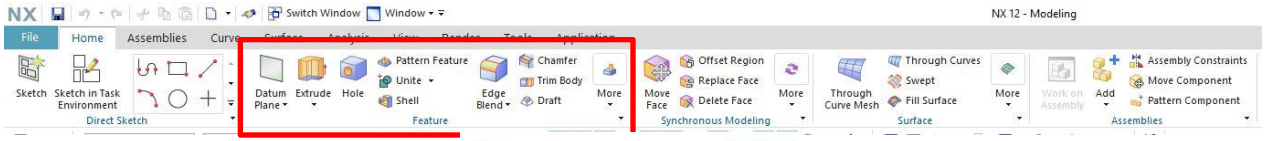

PRIMITIVES

Usually *Swept Features* are used to create *Primitives* instead of the commands mentioned below.

BLOCK

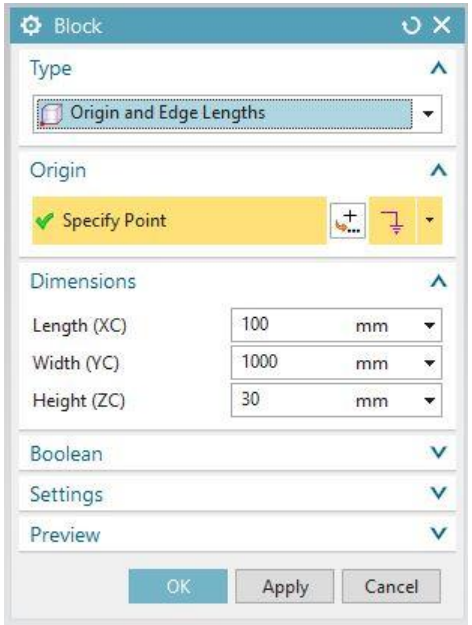

Type 1- origin and edge length:

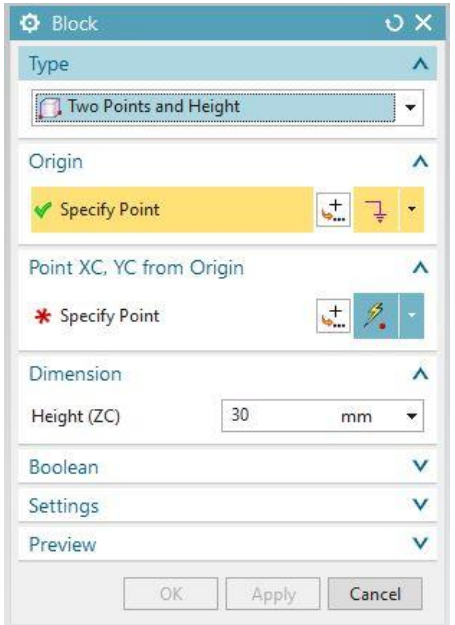

Type 2- 2 points and height:

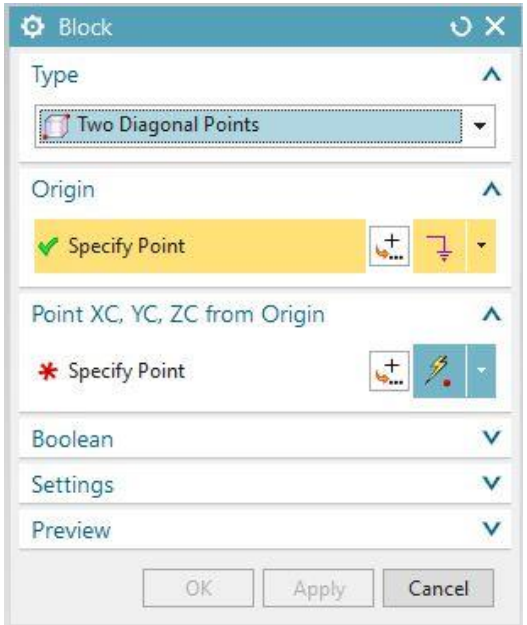

Type 3- 2 oposite diagonal points:

All your operation will stack in the part navigation tree

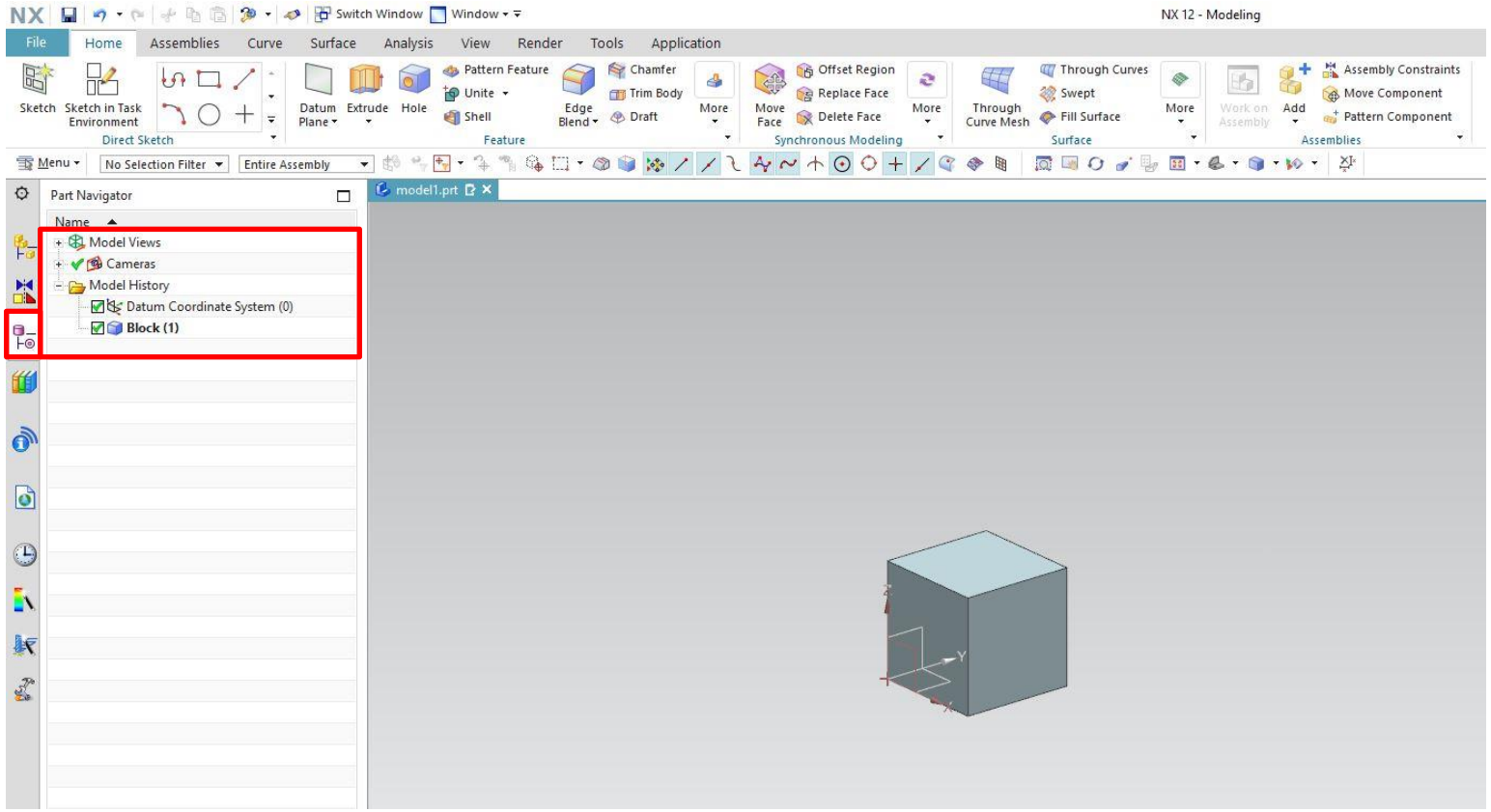

All the rest of the primitives have a similar menu, each one with his own parameters to create the shape that you select, a cylinder a sphere or a cone

REFERENCE FEATURES

The reference features are going to be used as helpers to build your geometry. The most useful ones are the plane and the datum, but you can also create vectors in space and points.

PLANE

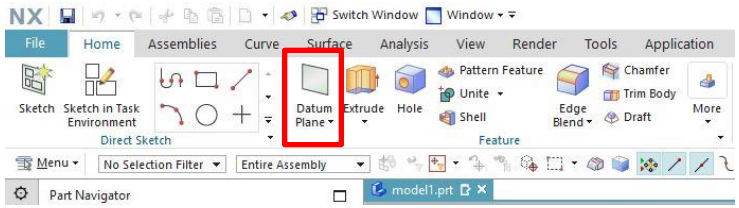

You can use a plain to create all your sketch supports and have them all linked to a feature that is really easy to modificate, for example to control all kind of heights or widths, they can also be used for trimming solids.

Pop-up menu of the plane

There are different options to create a plane, you can find them in the drop-down menu under type. After that it will ask you for the references that you need to create that plane.

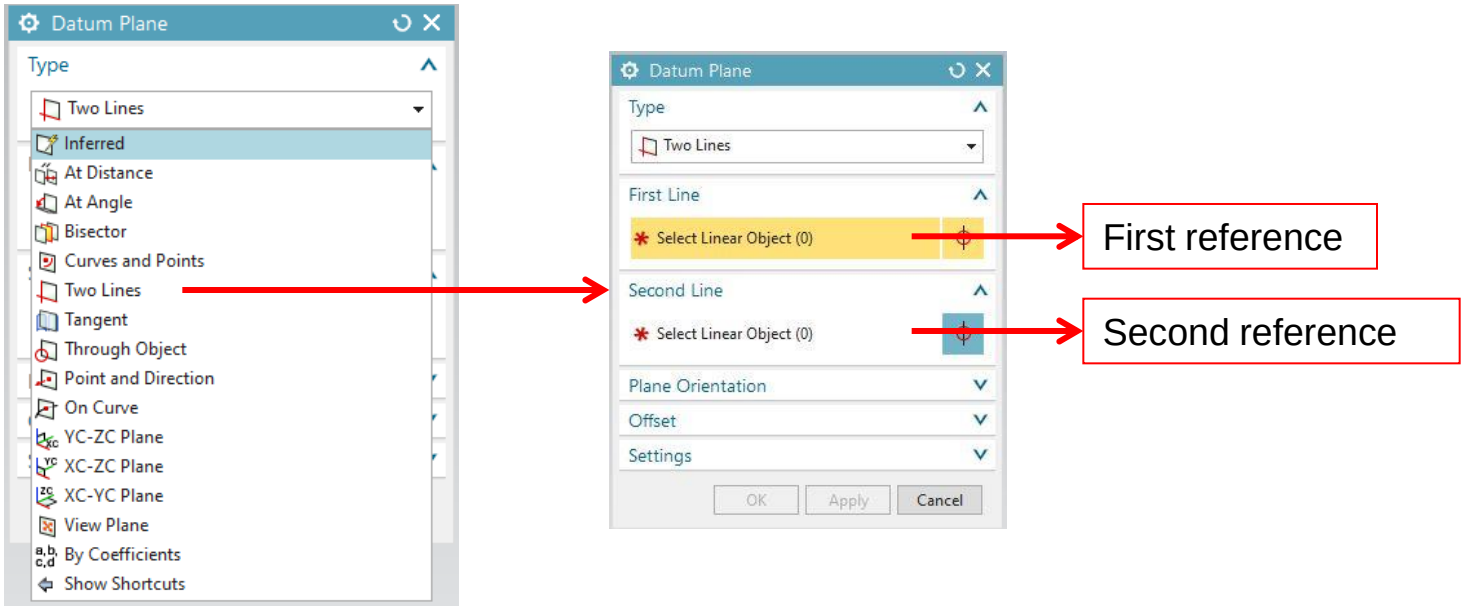

The most useful ones are: inferred, at distance, at angle, bisector, curve and points and two lines. We will discuss them during the course.

DATUM

You will find the datum (normal axis system) in the drop-down menu under the plane.

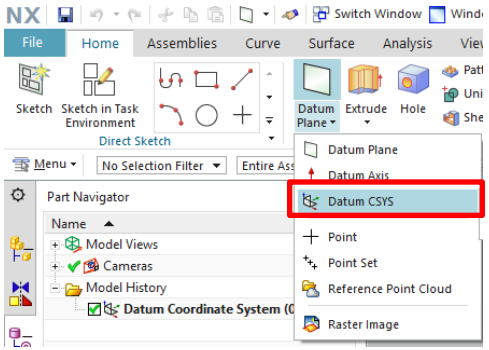

Like in the plane there are different forms of creating a datum that we will discuse during the curse

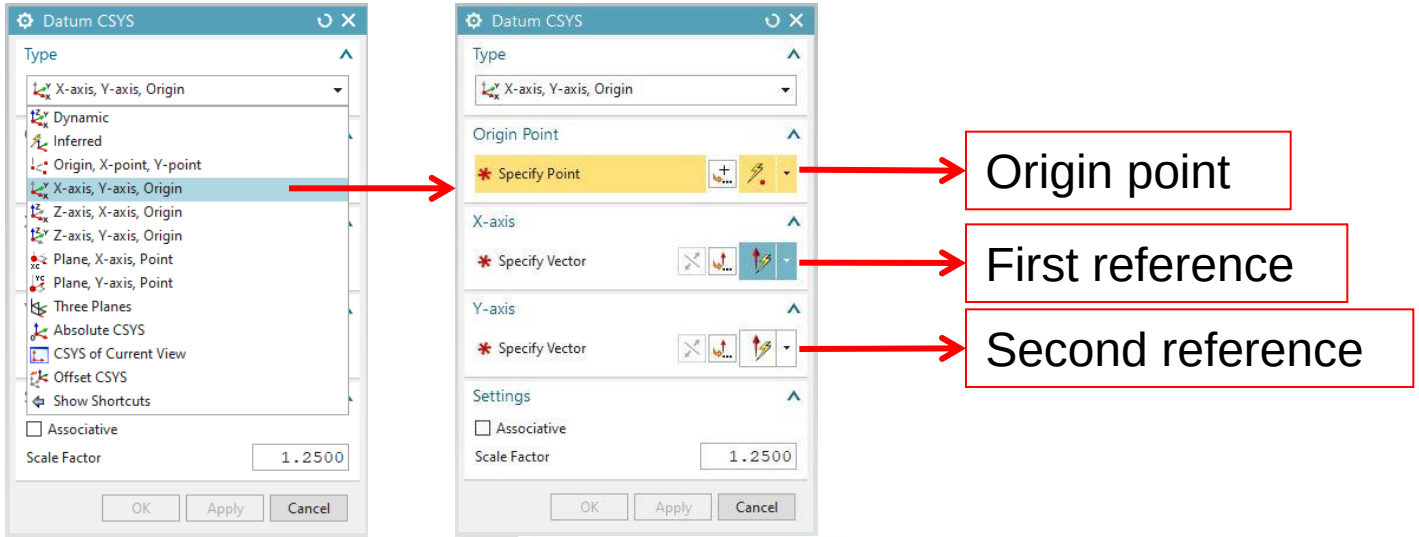

SWEEPT AND REMOVE FEATURES

The most important swept features are extrude and revolve, and the most useful remove features is the hole command. We will explain this commands by doing an example.

All the rest of the features are explained in the NX help pdf.

EXAMPLE

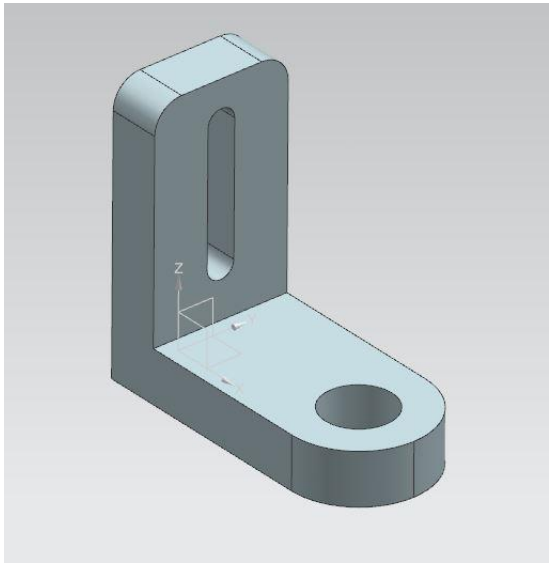

STEP 1

We are going to start by creating a new datum axis in the absolute axis system

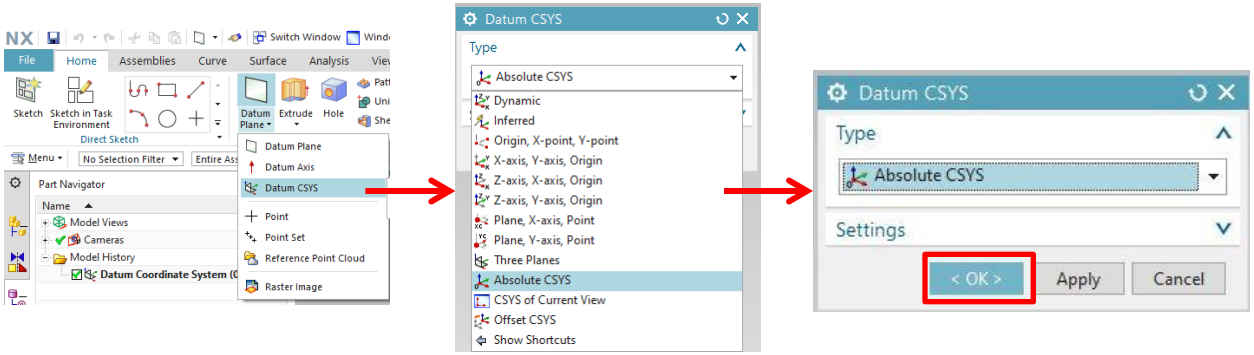

RESULT

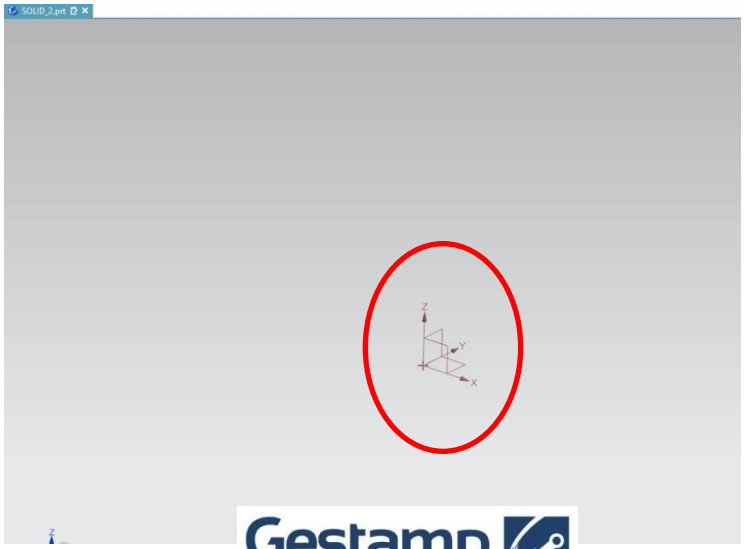

STEP 2

Create our first sketch

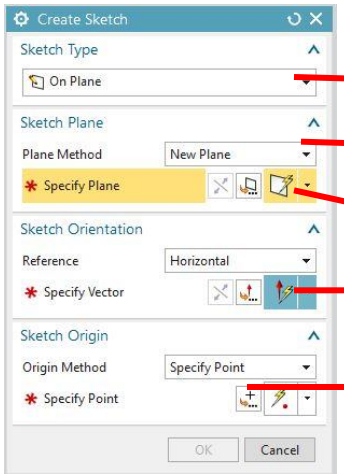

On plane

New plane

Select xz plane

Select x axis of the datum

Select the origin of the datum

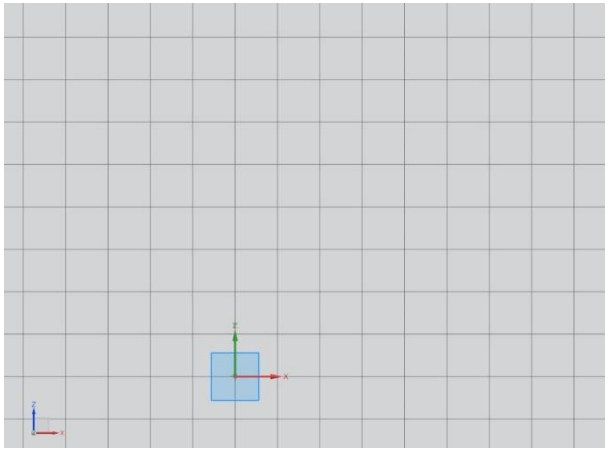

With the line

comand in the sketch task enviroment we will star drawing our profile.

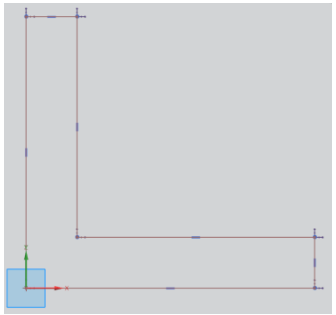

Underconstrained

As you can see is all brown so we will have to constrain it to fully constraind it, this way will become green.

We will use the rapid dimension icon

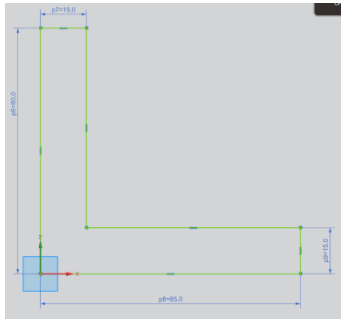

Fully constrained

Quiting from the sketch

RESULT

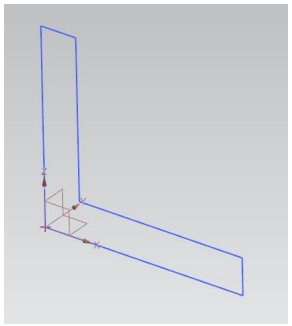

STEP 3

Now we will extrude our profile. We will click on the extrude icon and follow the steps. 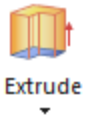

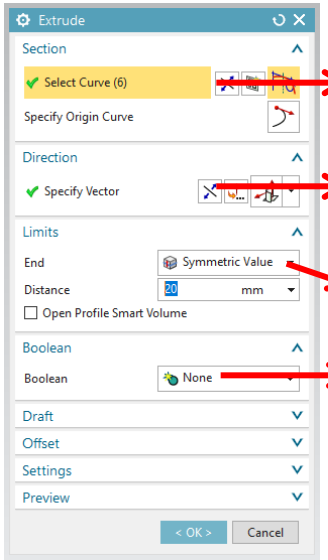

Select our profile

Select the y direction of the datum plane

Select symmetry value, and type a value of 20mm

None

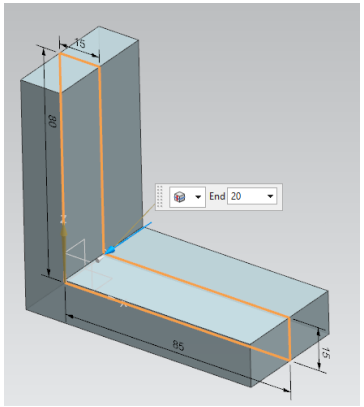

RESULT

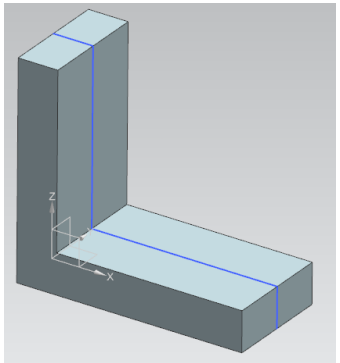

STEP 4

Use the edge blend icon to create the edge fillet's

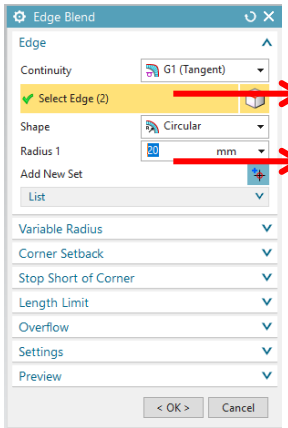

Select the edges

Type the value of the radius

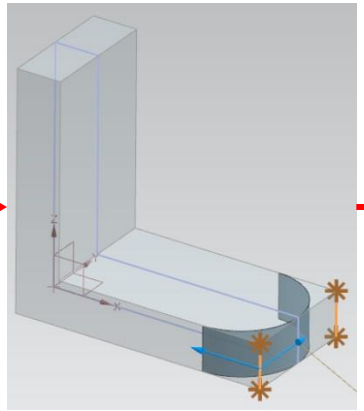

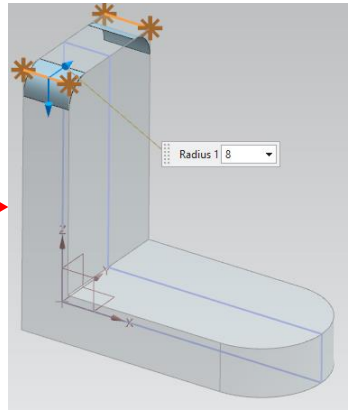

RESULT

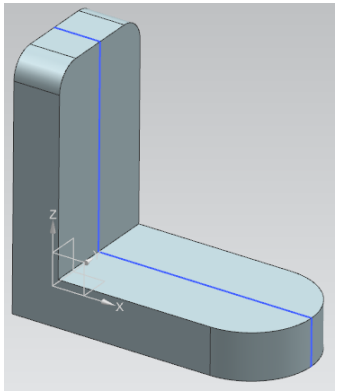

STEP 5

In the next step we will create a hole in the base, select the hole icon

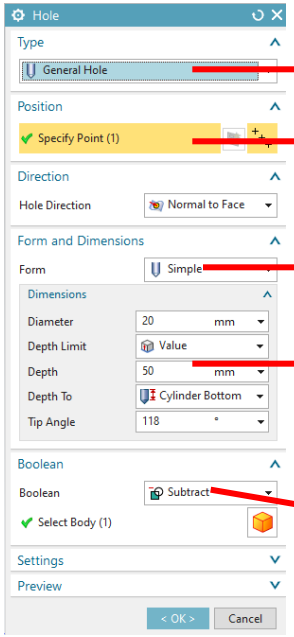

General hole

Select the center point on the blend

Simple hole

Type the value you want

In the boolean operatin
we will select substract

RESULT

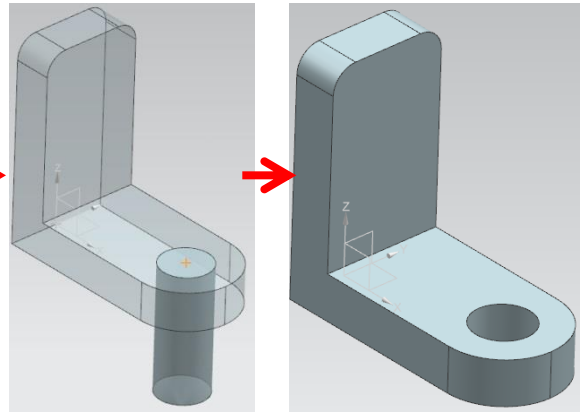

STEP 6

Creating a plane, as we told before we are going to use a plane so we can suport a new sketch to make our slot. Select the plane icon

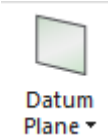

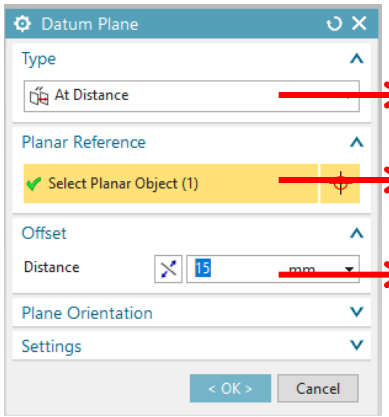

Select at distance

Select the zy plane of our datum

Type 20mm

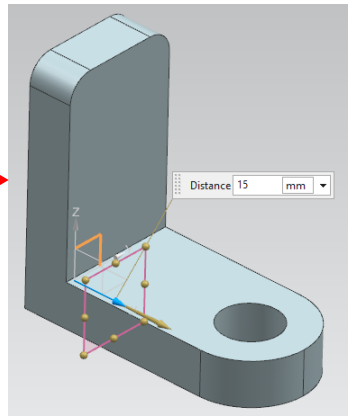

RESULT

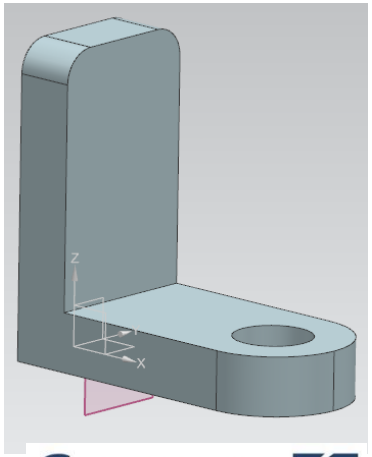

STEP 7

As we did before we will have to create a new sketch using as support the plane that we just create, we have to approach it the same way than before.

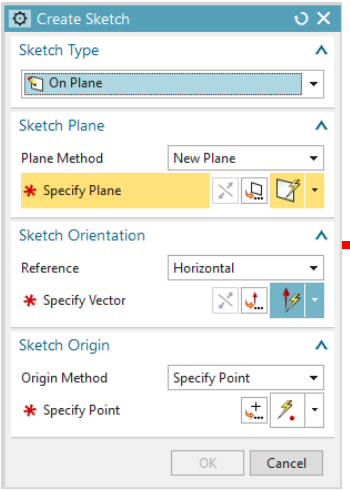

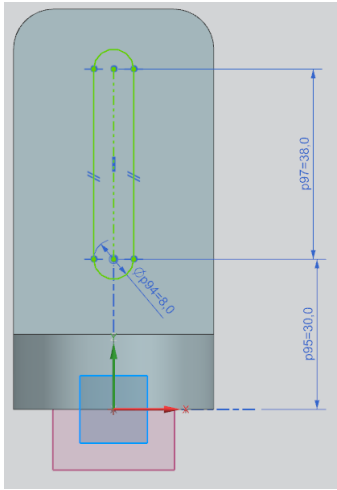

Fully constained

RESULT

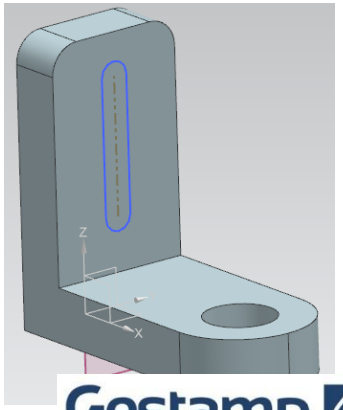

STEP 8

Almost done, we will use the command extrude again, using the sketch that we do for the slot.

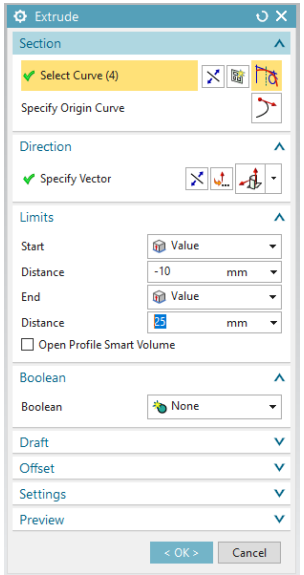

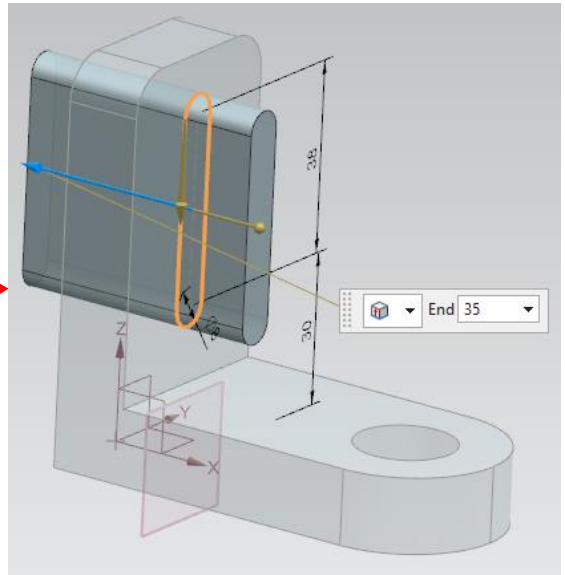

RESULT

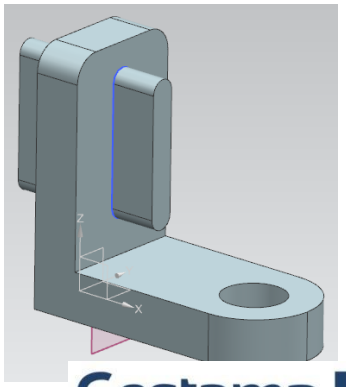

STEP 8

Finally we are going to use the subtraction boolean operation so we can remove the slot body that we have to the rest of the body to finish our piece.

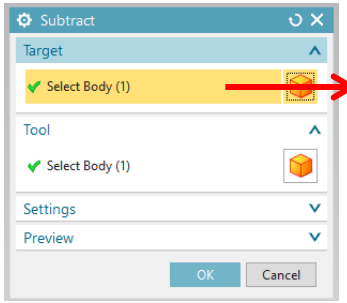

Select target

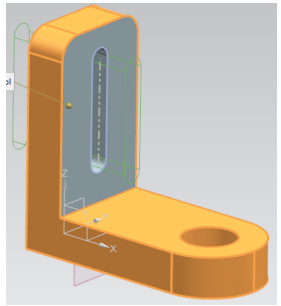

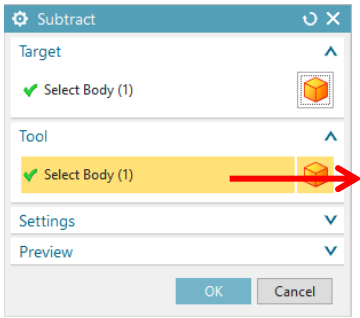

Select body to remove

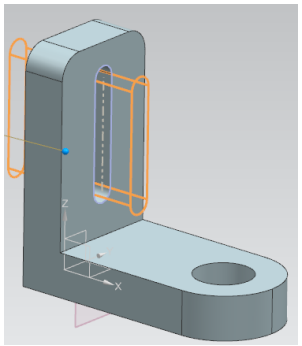

FINAL RESULT

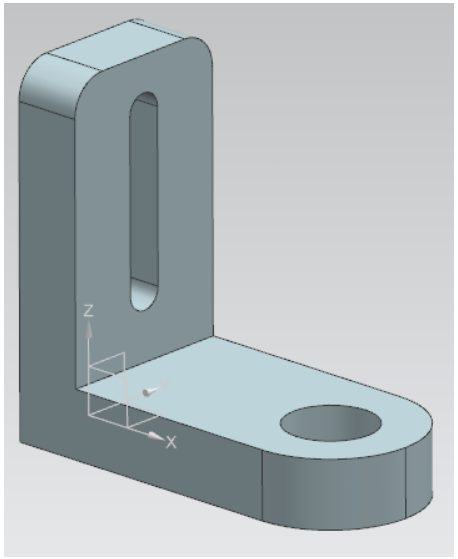

SOLID EXERCISES

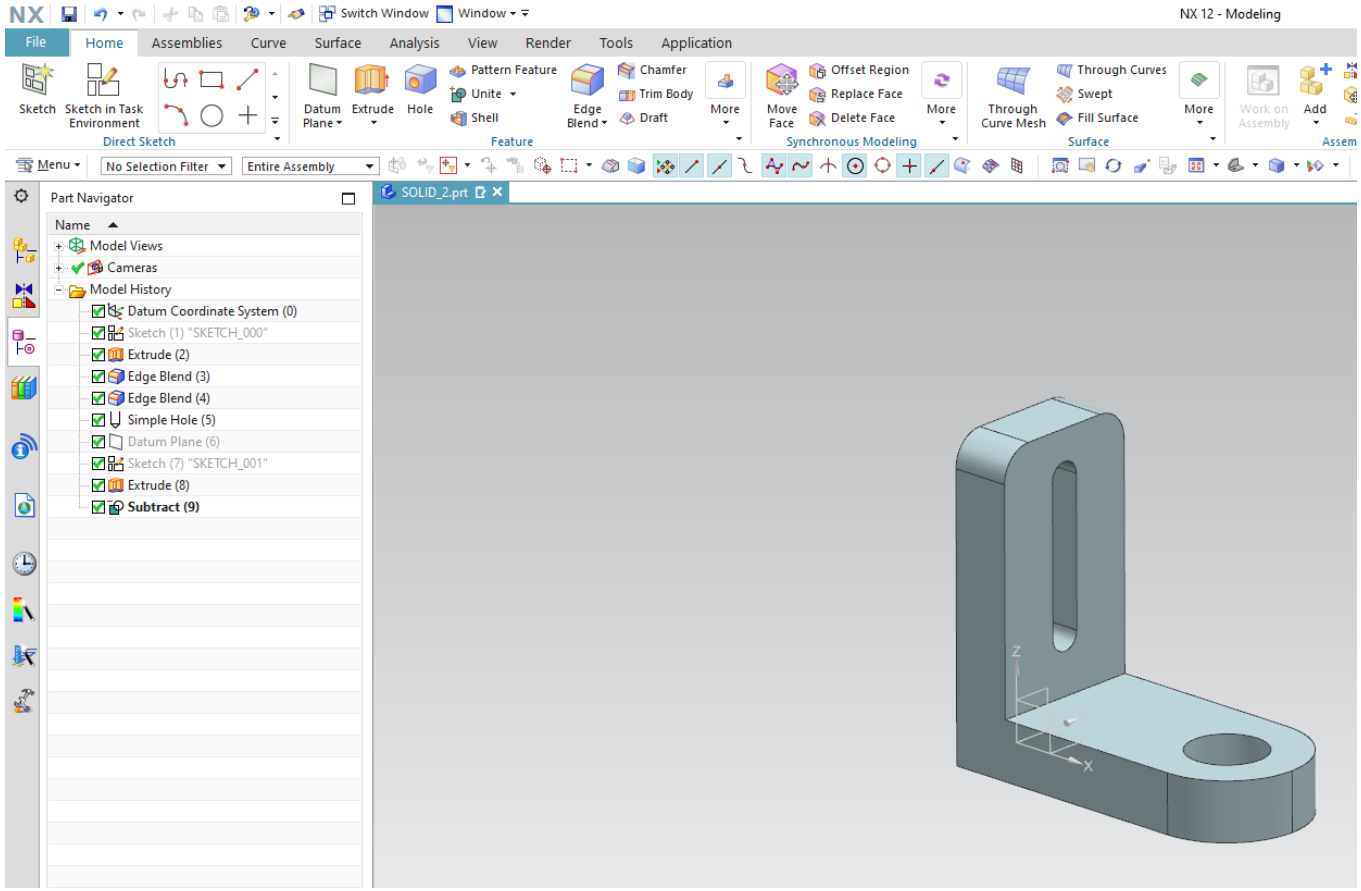

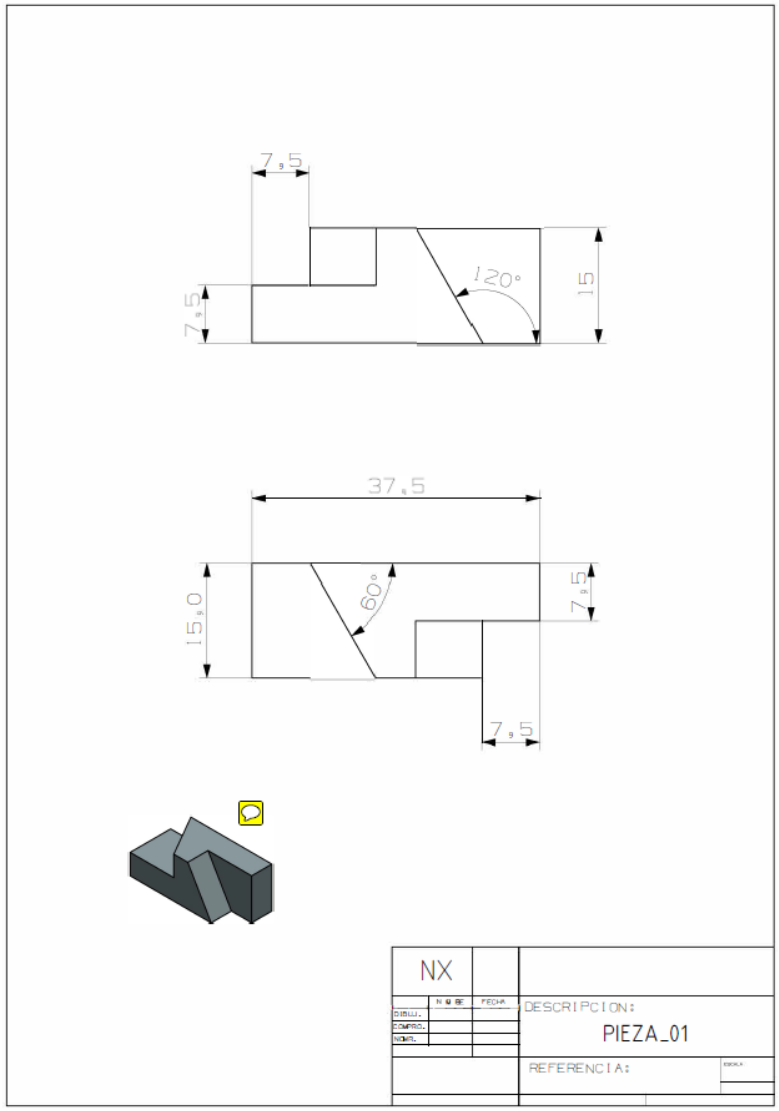
7,5
120°
15
7,5
37,5
60°
15,0
7,5
7,5
NX
DESCRIPCION:
PIEZA_01
REFERENCIA:

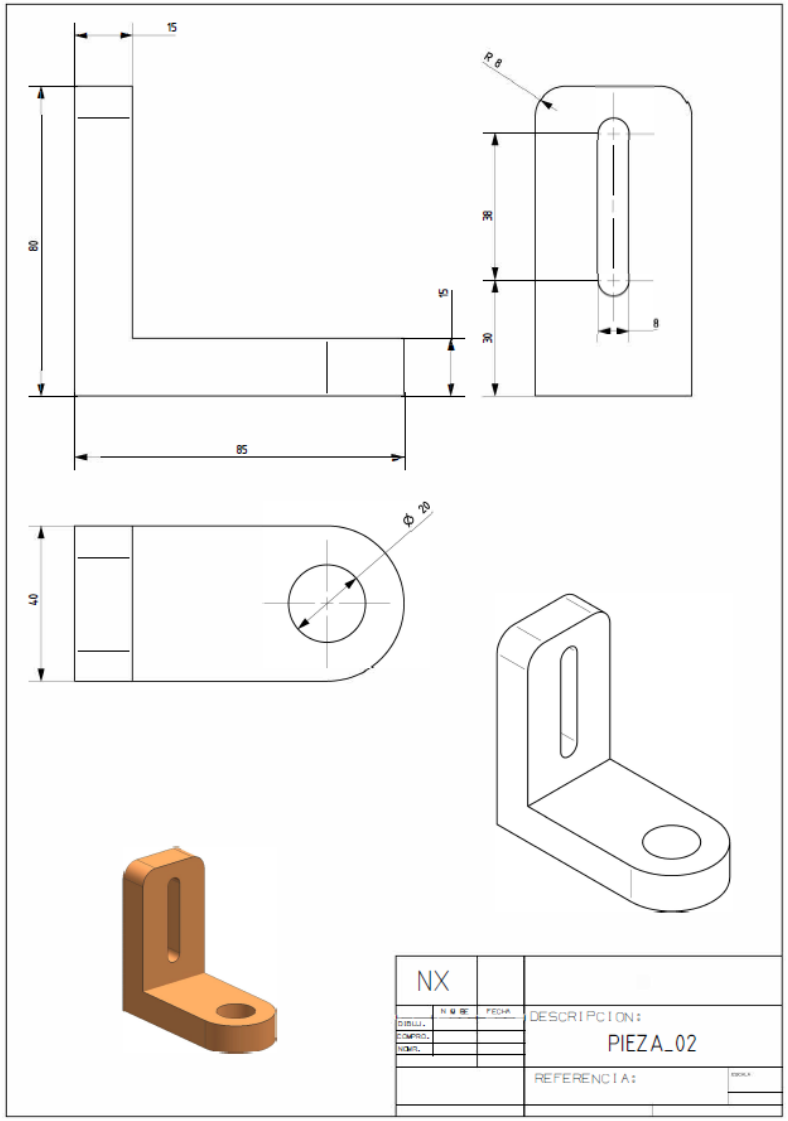
15
R 8
80
38
15
30
8
85
Ø 20
40
NX
DESCRIPCION:
PIEZA_02
REFERENCIA:

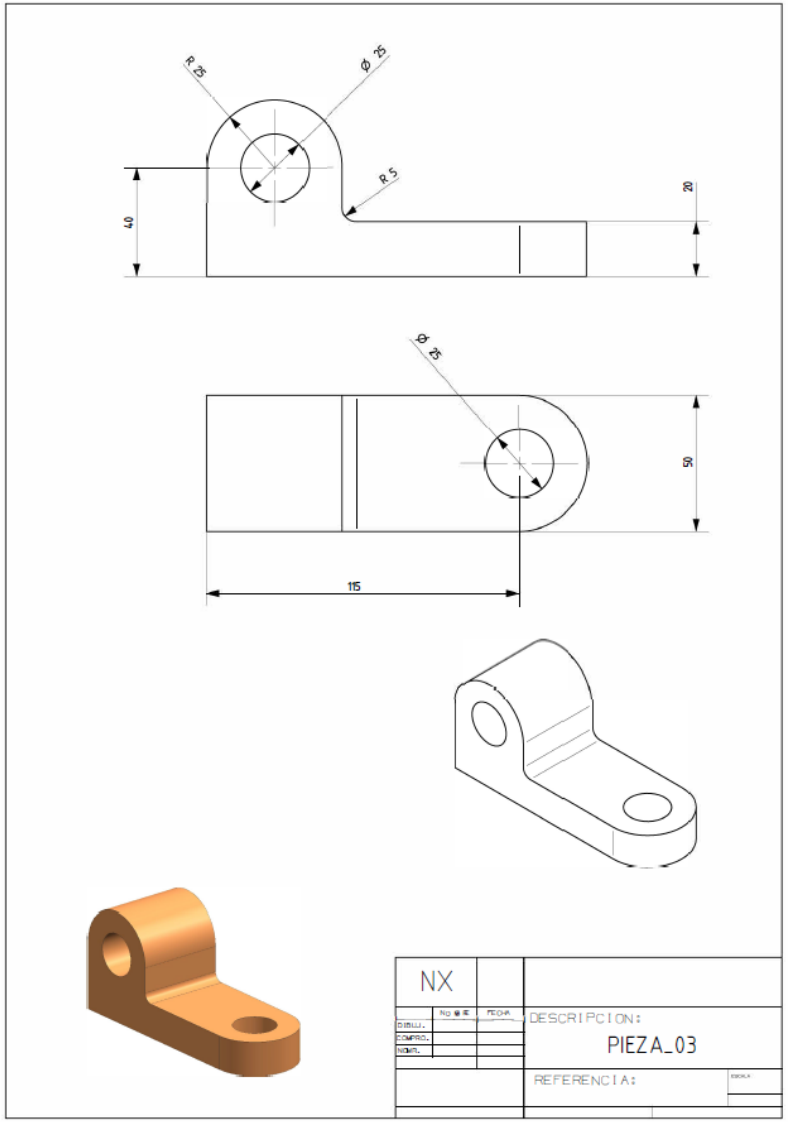
R 25
Ø 25
R 5
40
20
Ø 25
50
115
NX
DESCRIPCION:
PIEZA_03
REFERENCIA:

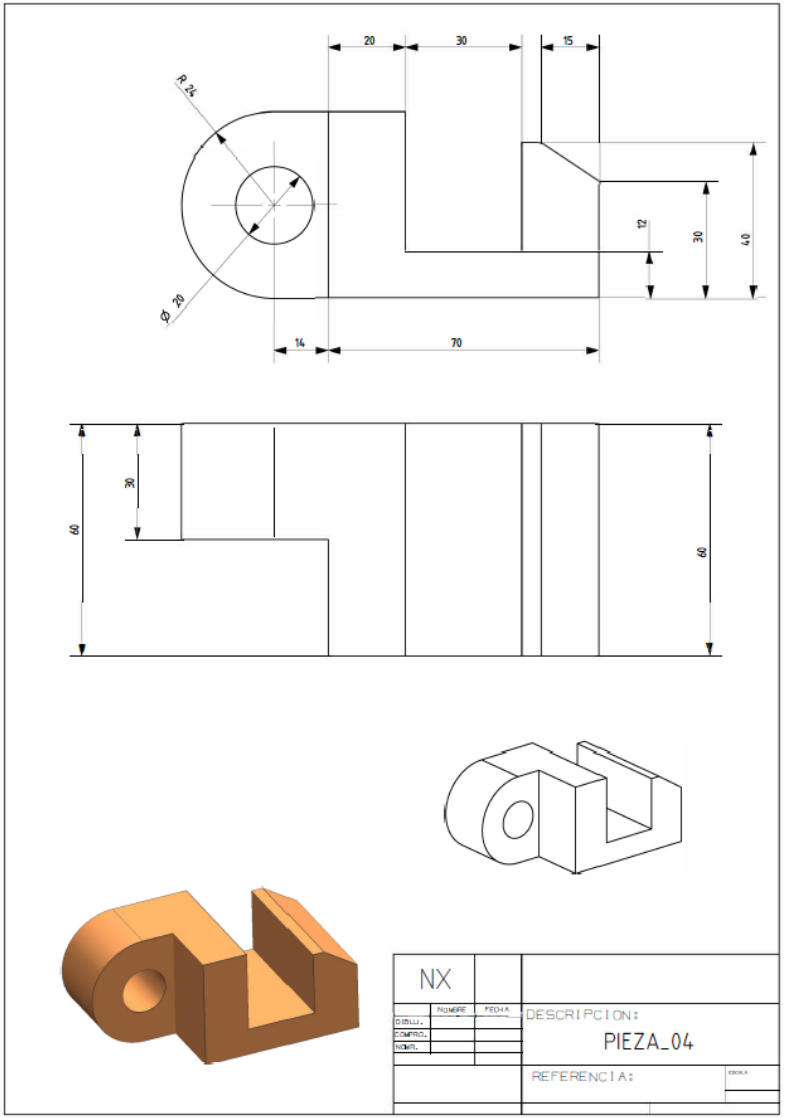
20
30
15
R 24
Ø 20
12
30
40
14
70
30
60
60
NX
DESCRIPCION:
PIEZA_04
REFERENCIA:

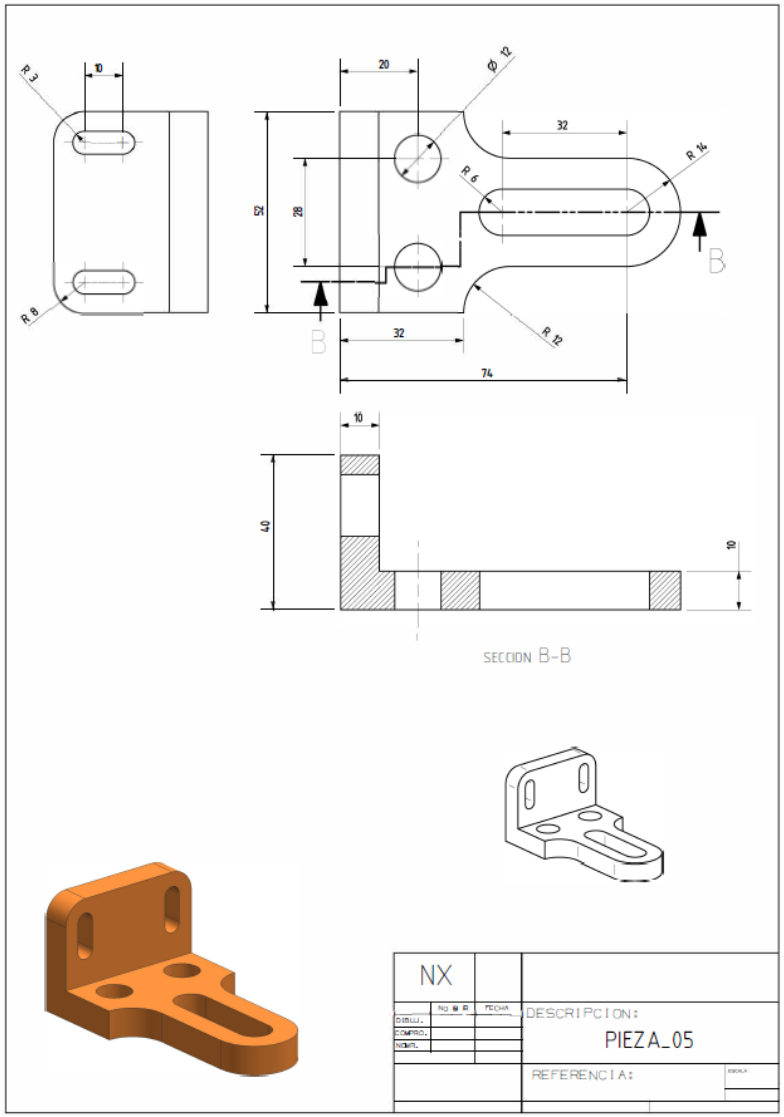
R 3
10
20
Ø 12
32
R 14
R 6
52
28
B
B
32
R 12
74
R 8
10
40
10
SECCION B-B
NX
DESCRIPCION:
PIEZA_05
REFERENCIA:

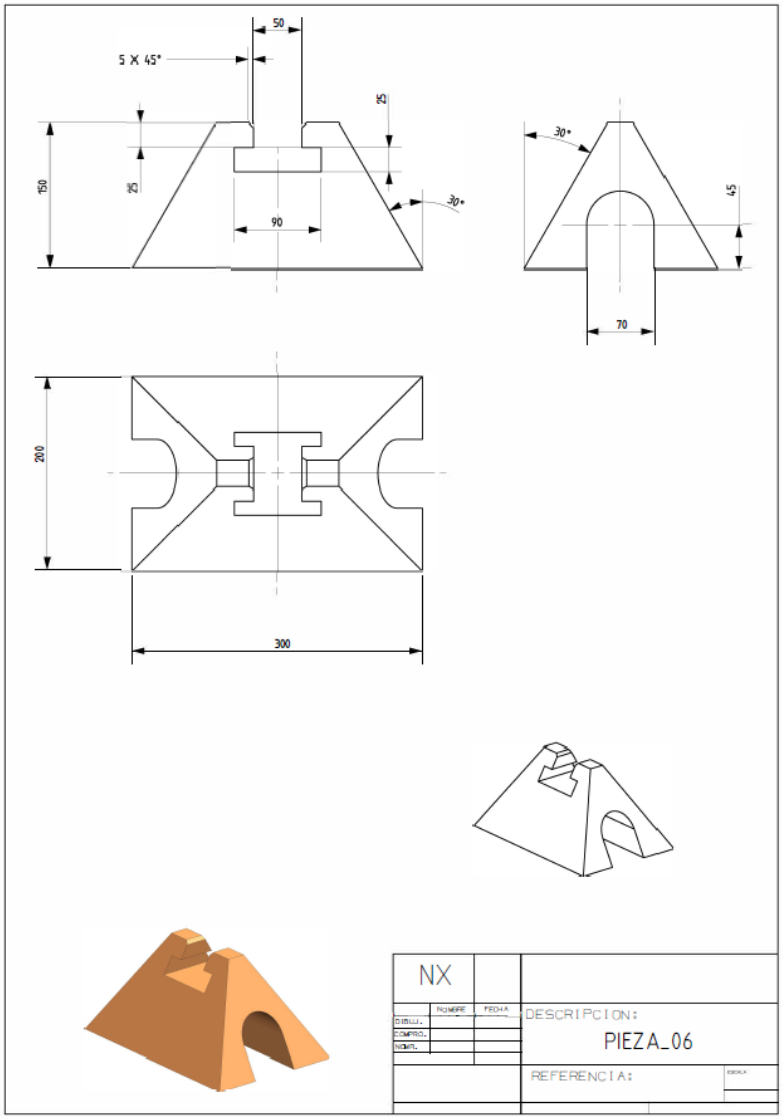
50
5 X 45°
15
150
30
30°
90
30°
45
70
200
300
NX
DESCRIPCION:
PIEZA_06
REFERENCIA:

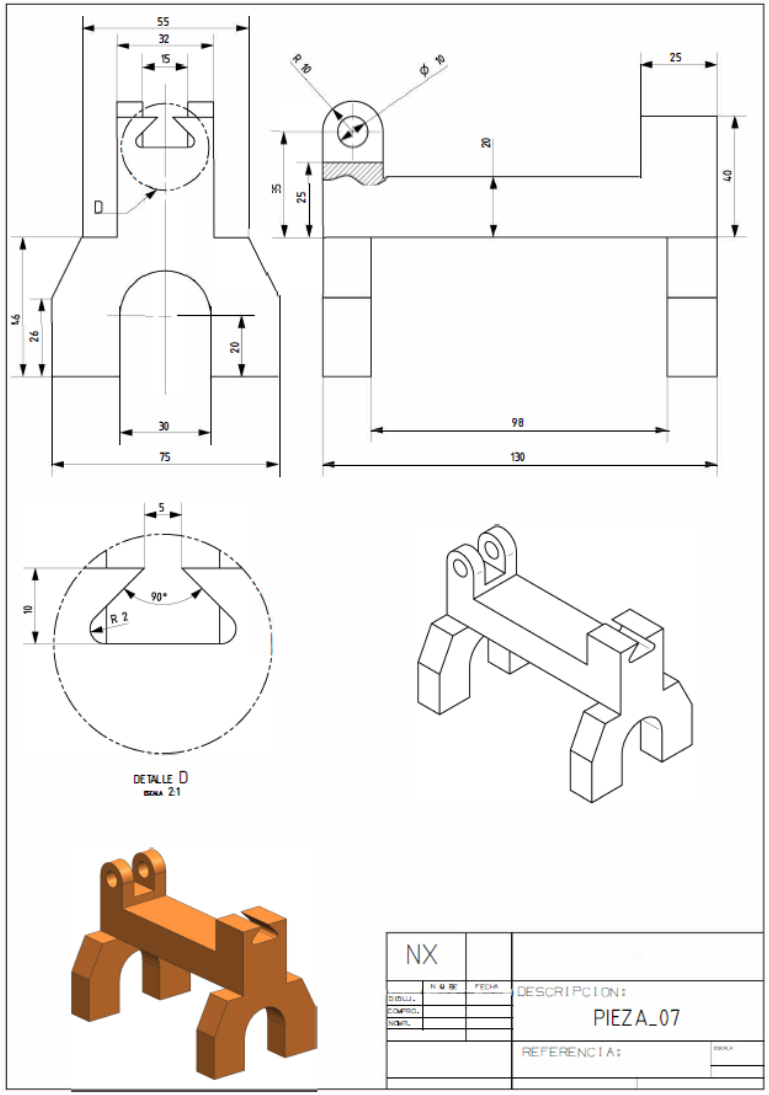
55
32
15
R 10
Ø 10
25
20
35
25
40
D
46
26
20
30
75
98
130
5
10
90°
R 2
DETALLE D
ESCALA 2:1
NX
DESCRIPCION:
PIEZA_07
REFERENCIA:

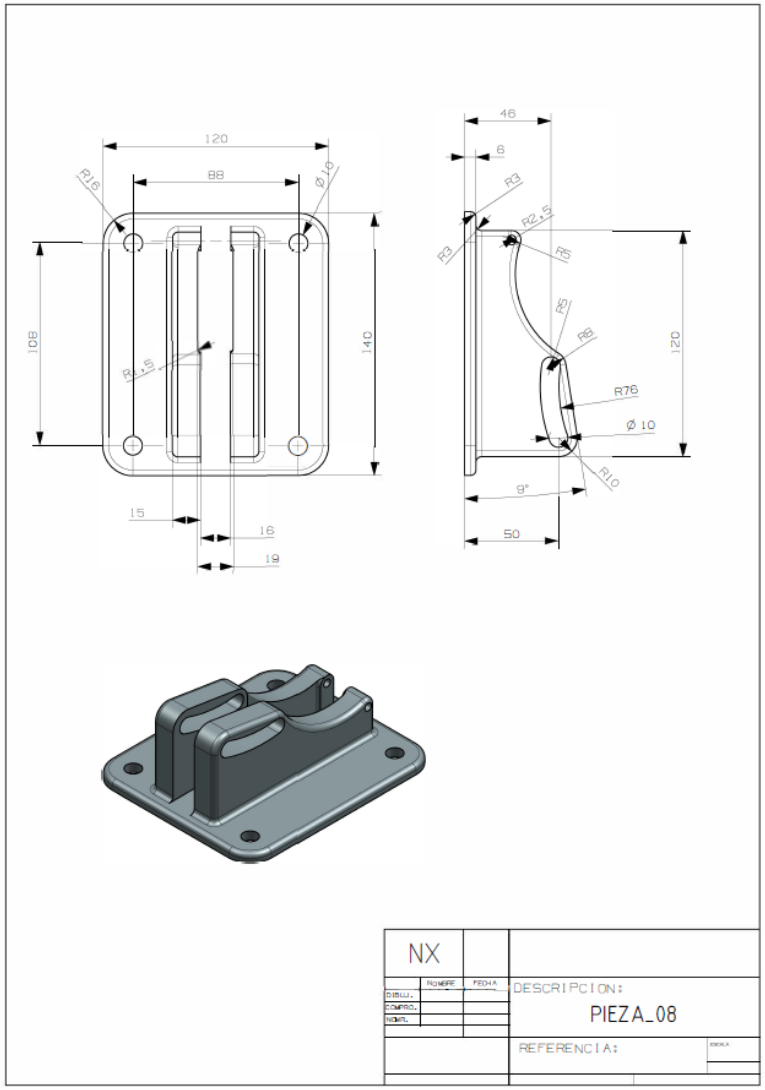
120
88
R16
Ø 16
108
140
R 5
46
8
R3
R2,5
R3
R5
R8
R8
R76
Ø 10
R10
120
9°
50
15
16
19
NX
DESCRIPCION:
PIEZA_08
REFERENCIA:

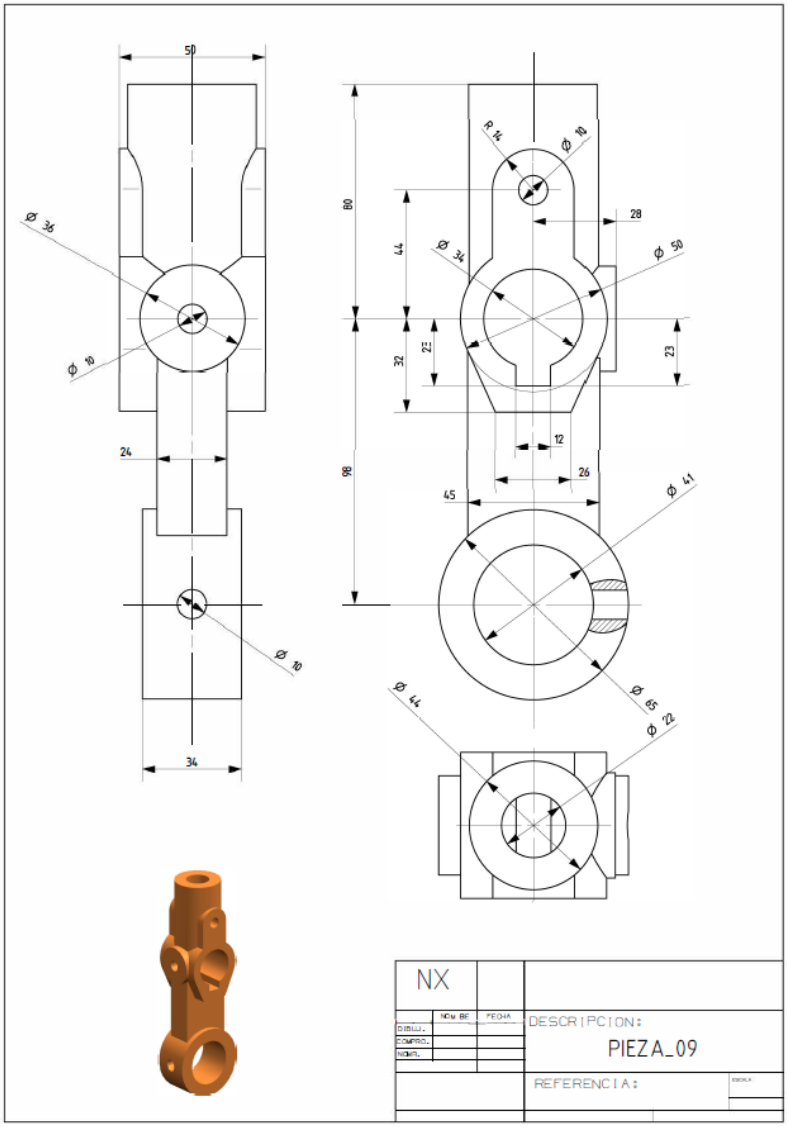
NX
DESCRIPCION:
PIEZA_09
REFERENCIA:

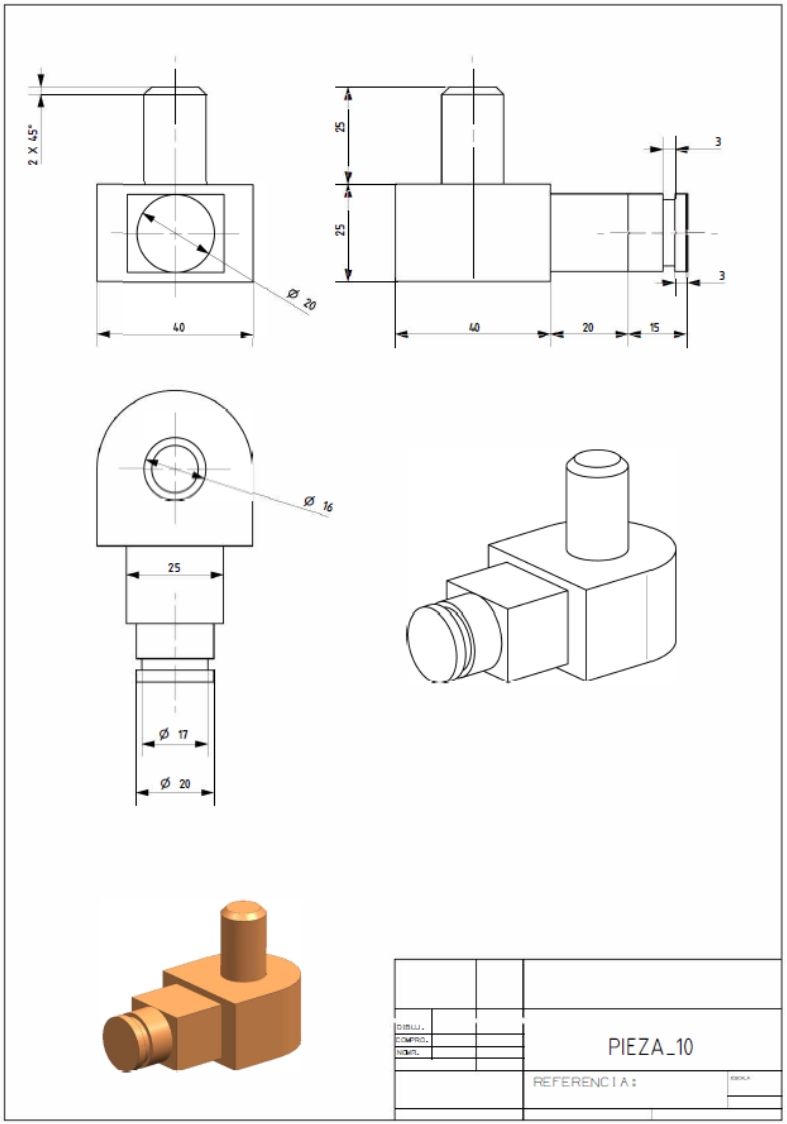
PIEZA_10
REFERENCIA:

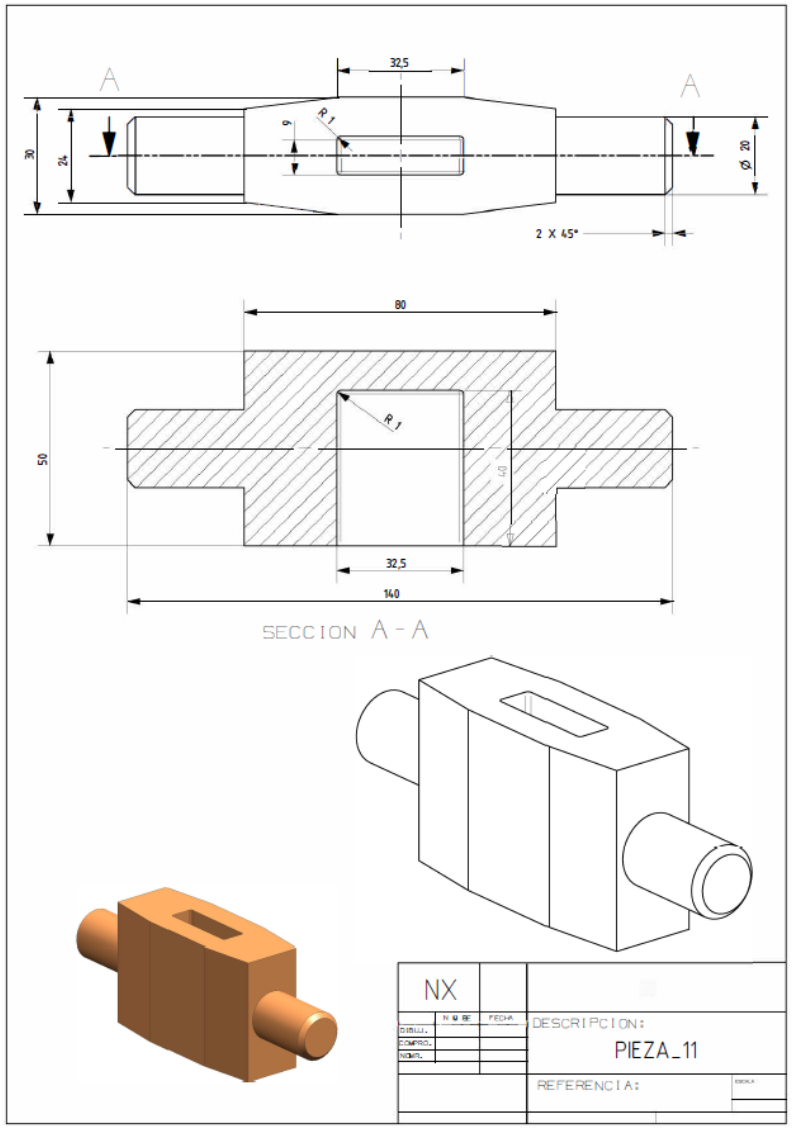
A
A
32,5
30
24
9
R 1
Ø 20
2 X 45°
80
50
R 1
32,5
140
SECCION A - A
NX
DESCRIPCION:
PIEZA_11
REFERENCIA:

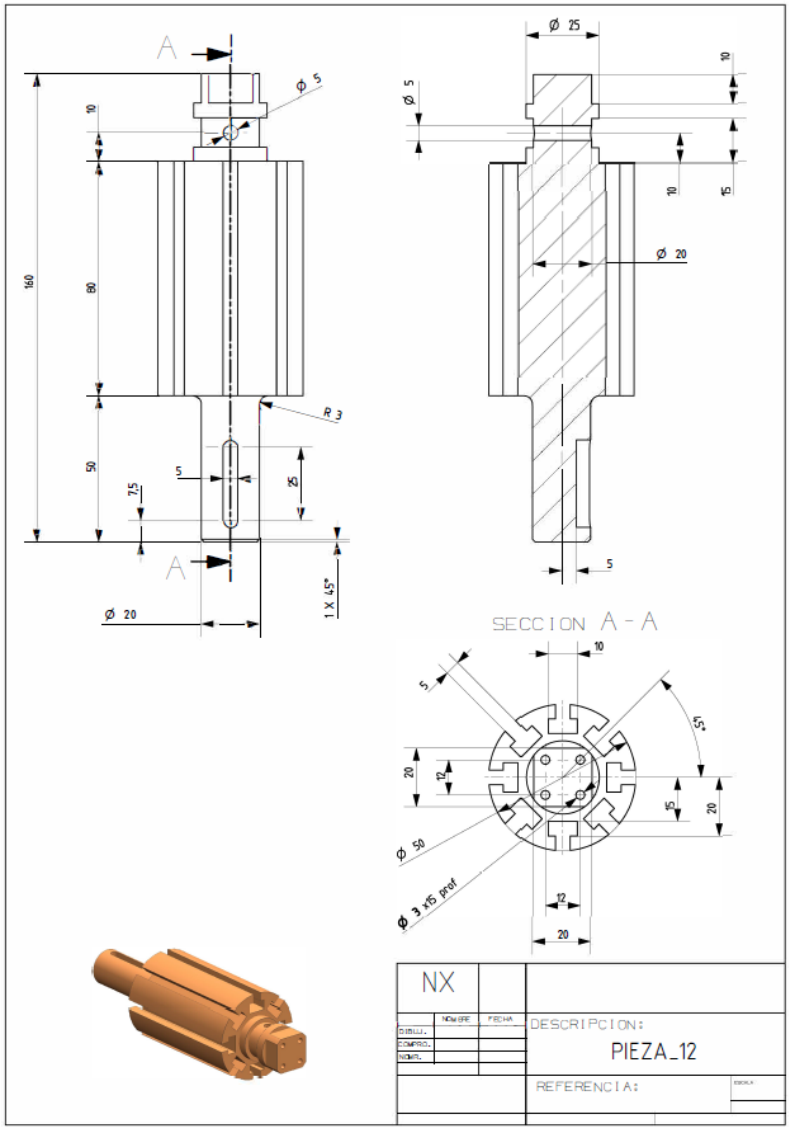
A
Ø 5
Ø 25
Ø 5
10
160
80
50
7,5
5
25
R 3
A
Ø 20
1 X 45°
10
15
Ø 20
5
SECCION A - A
10
5
45°
20
12
15
20
Ø 50
Ø 3 x 5 prof
12
20
NX
DESCRIPCION:
PIEZA_12
REFERENCIA:

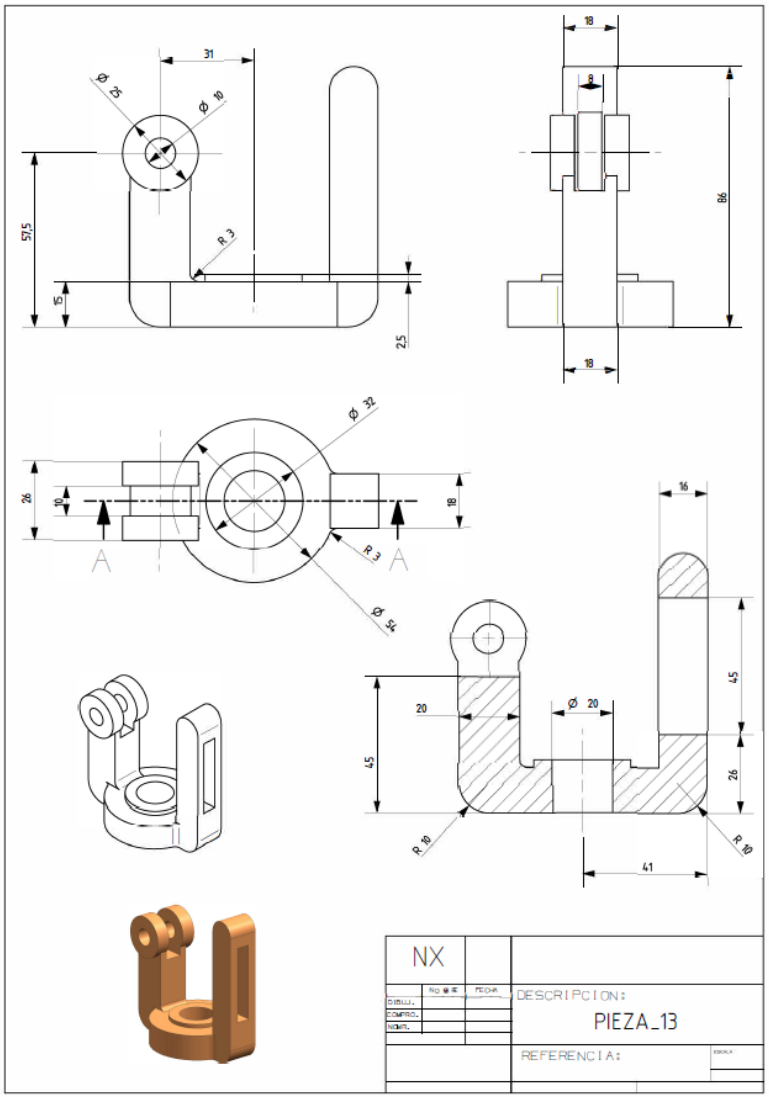
NX
DESCRIPCION:
PIEZA_13
REFERENCIA:

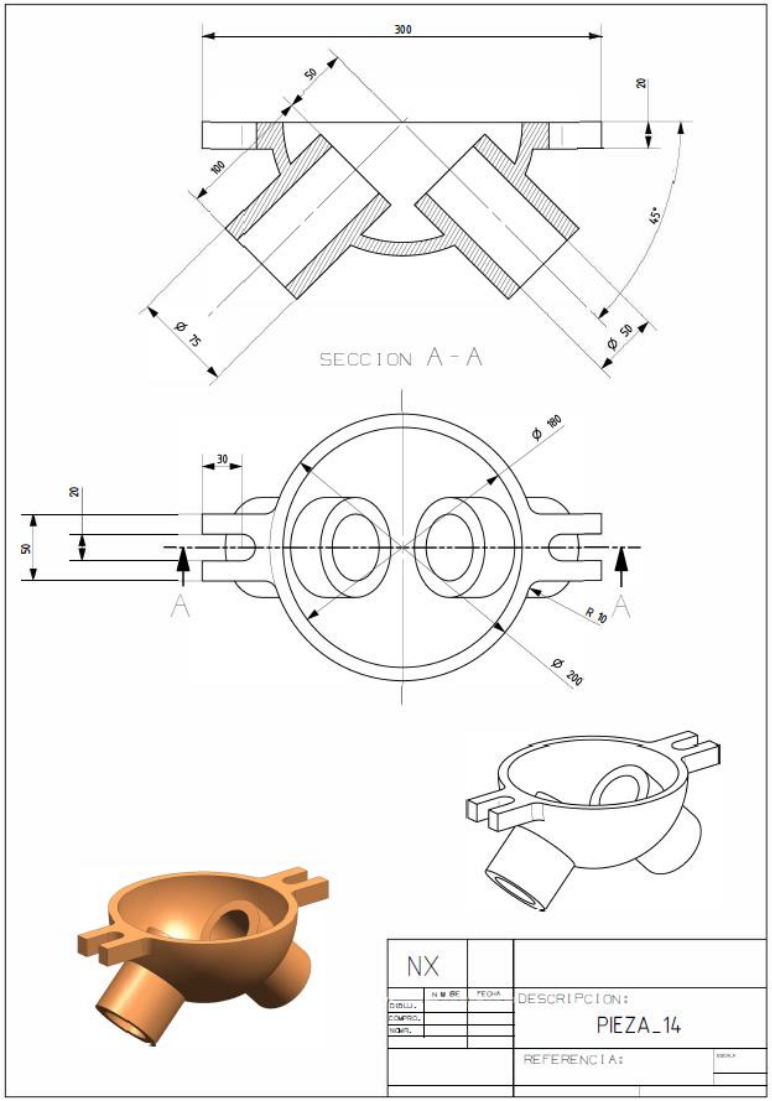
SECCION A - A
NX
DESCRIPCION:
PIEZA_14
REFERENCIA:

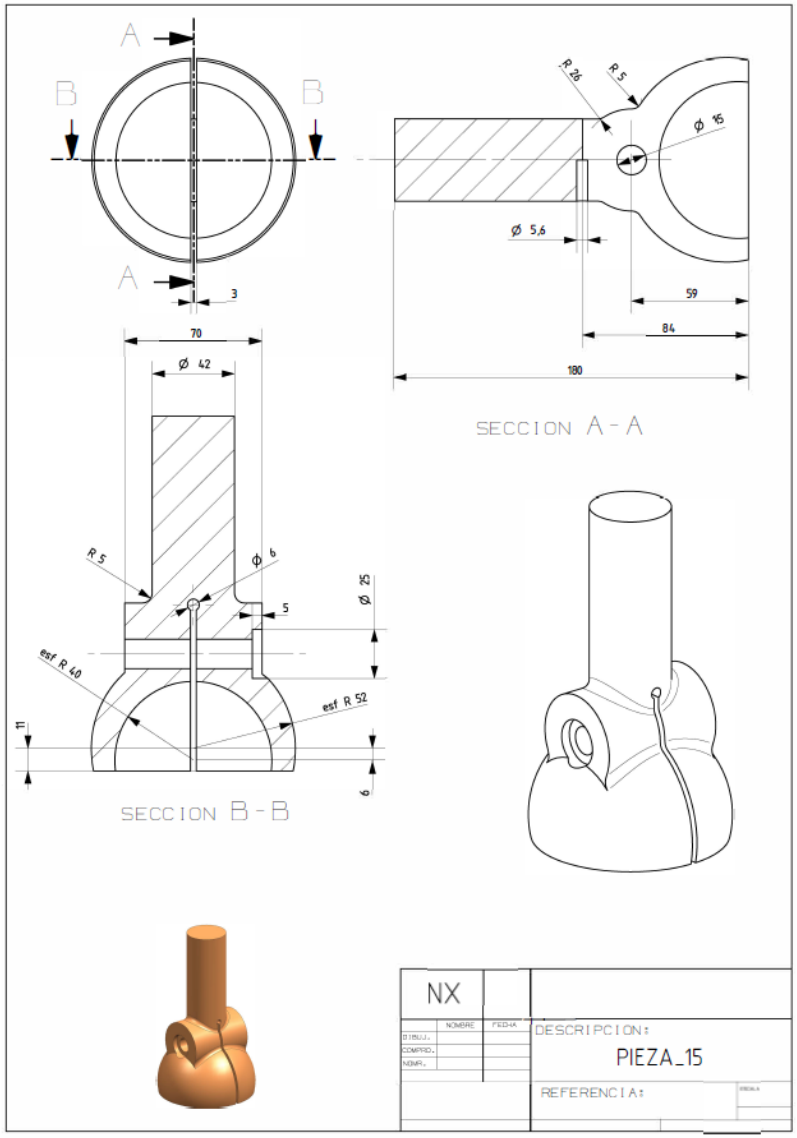
A
B
B
A
3
R 26
R 5
Ø 16
Ø 5,6
59
84
180
SECCION A - A
70
Ø 42
R 5
Ø 6
5
Ø 25
esf R 40
esf R 52
11
6
SECCION B - B
NX
DESCRIPCION:
PIEZA_15
REFERENCIA:

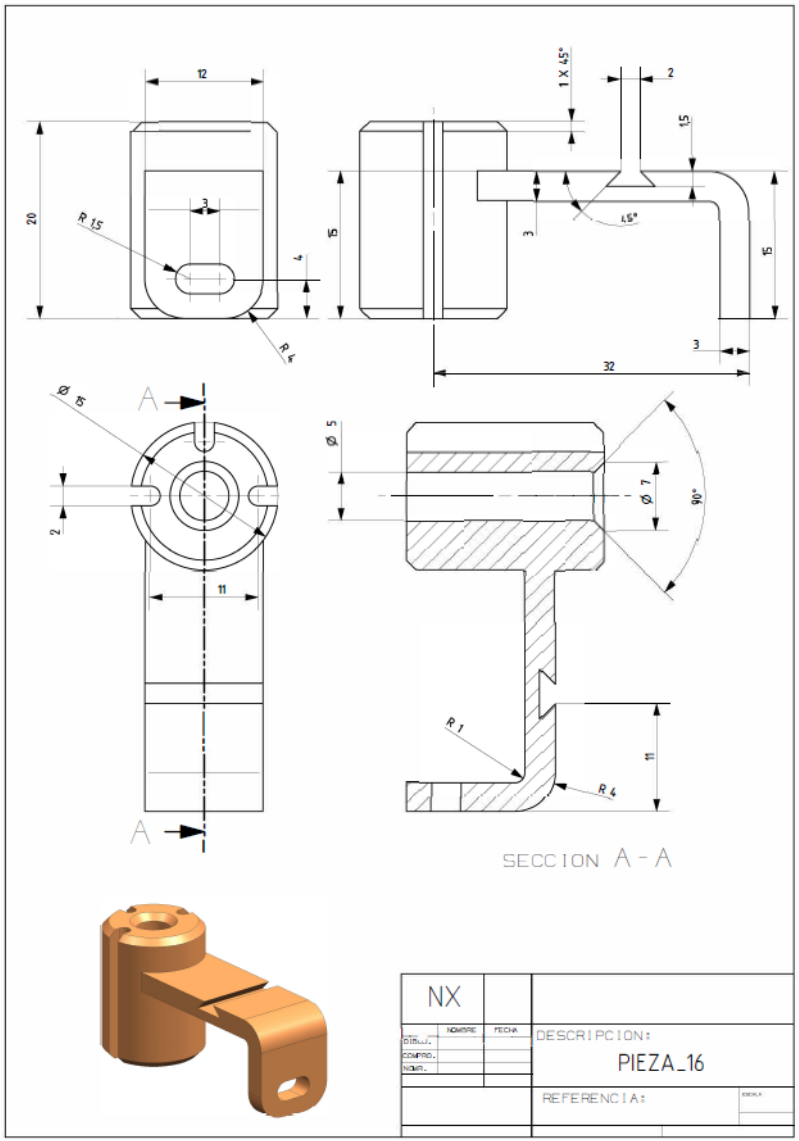
12
20
R 1,5
3
4
R 4
1 X 45°
2
1,5
15
3
45°
15
3
32
Ø 15
A
2
11
A
Ø 5
Ø 7
90°
R 1
R 4
11
SECCION A - A
NX
DESCRIPCION:
PIEZA_16
REFERENCIA:

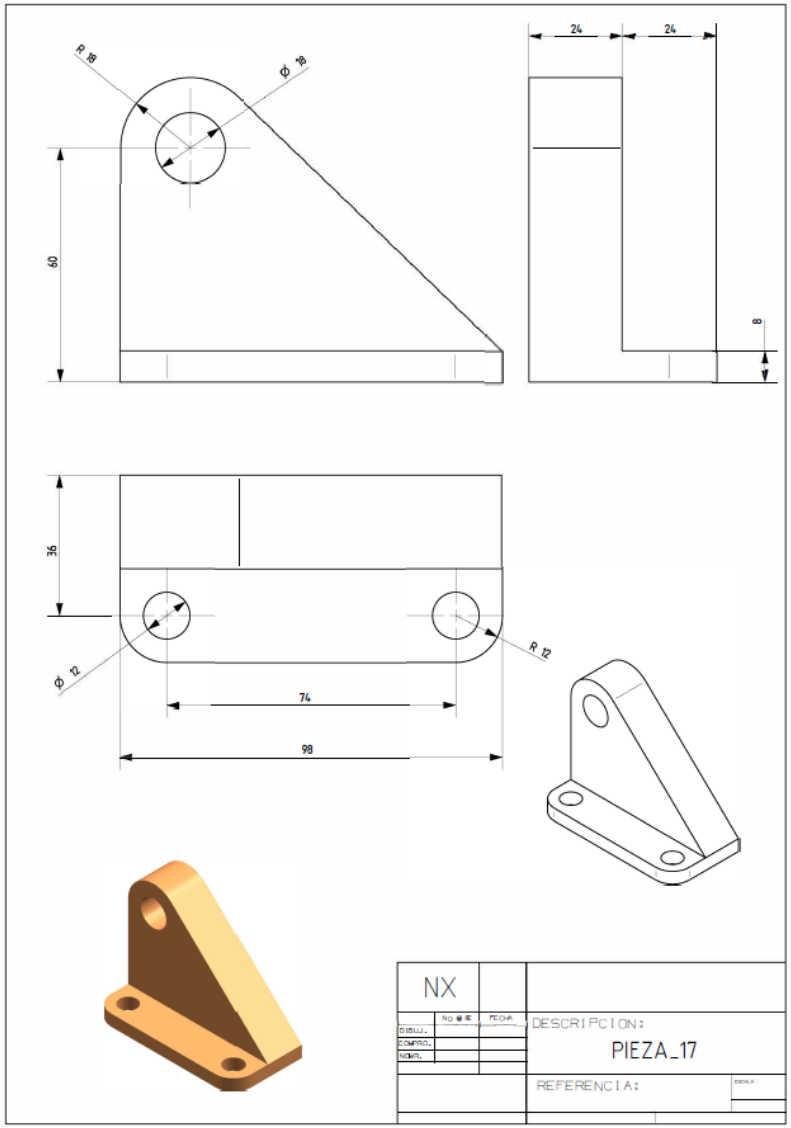
R 18
Ø 18
60
24
24
8
36
Ø 12
R 12
74
98
NX
DESCRIPCION:
PIEZA_17
REFERENCIA:

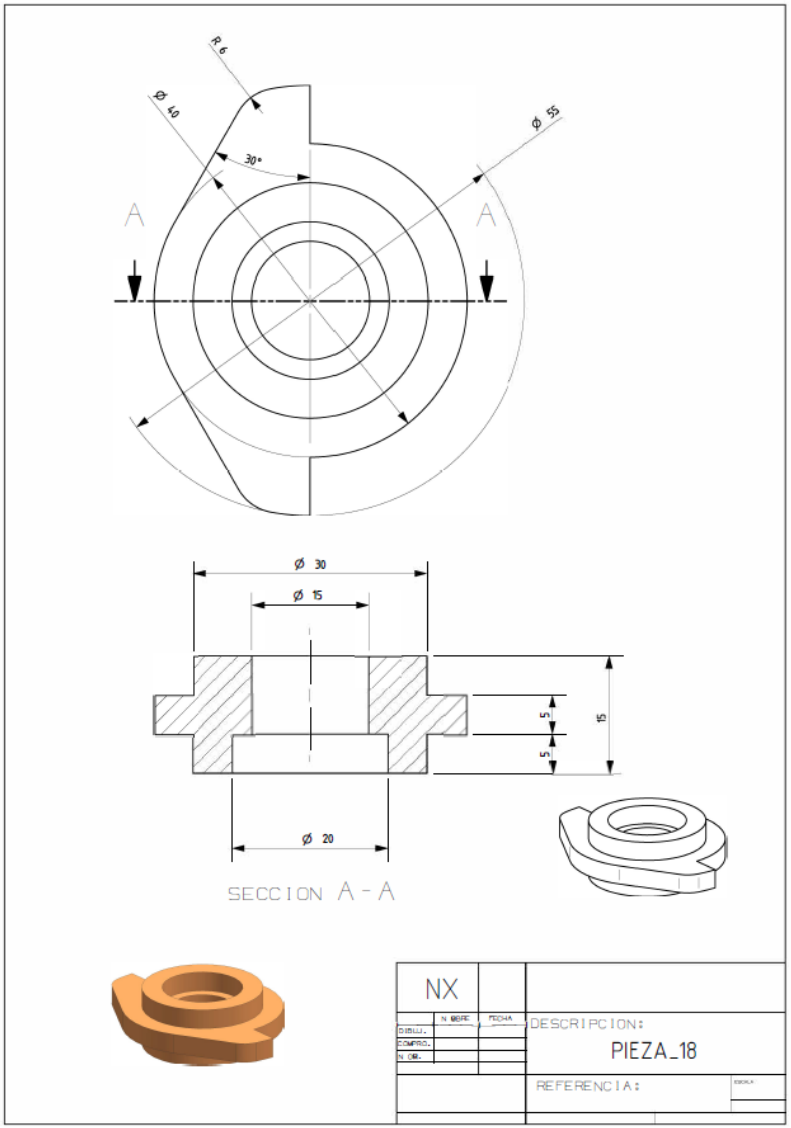
R 6
Ø 40
Ø 55
30°
A
A
Ø 30
Ø 15
5
5
15
Ø 20
SECCION A - A
NX
DESCRIPCION:
PIEZA_18
REFERENCIA:

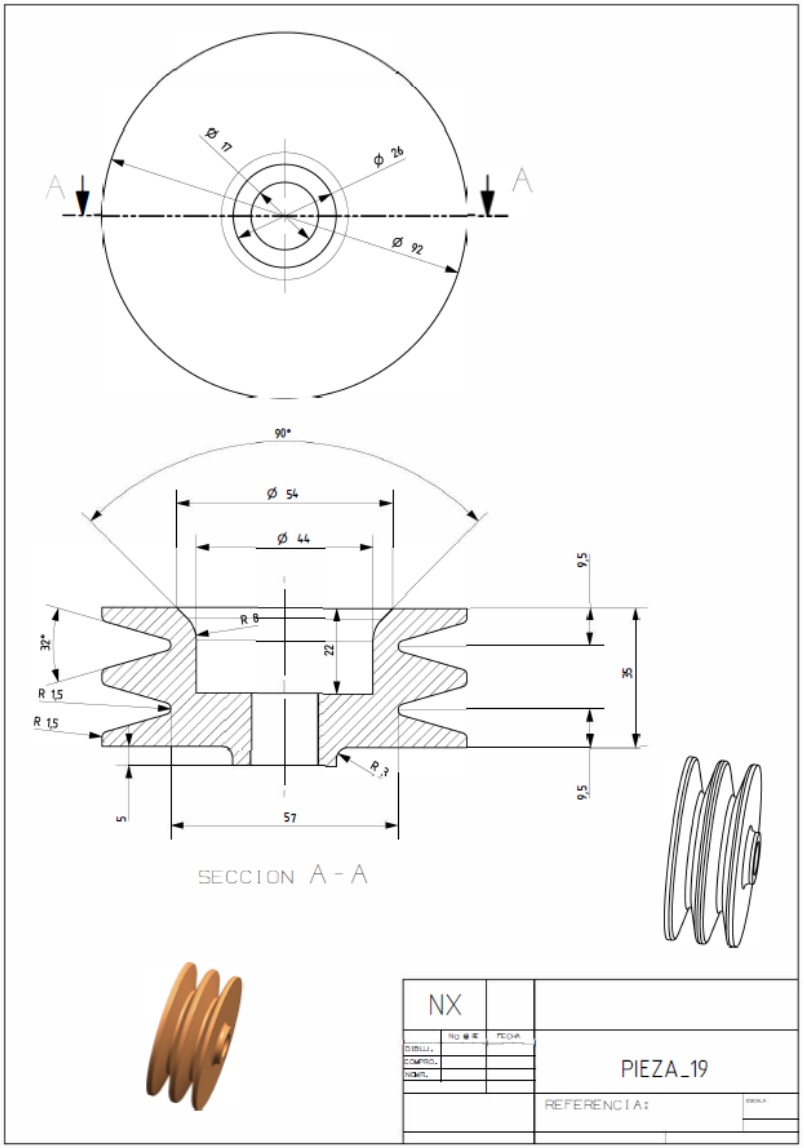
A
A
Ø 17
Ø 26
Ø 92
90°
Ø 54
Ø 44
R 8
22
32°
R 1,5
R 1,5
R 3
9,5
35
9,5
5
57
SECCION A - A
NX
PIEZA_19
REFERENCIA:

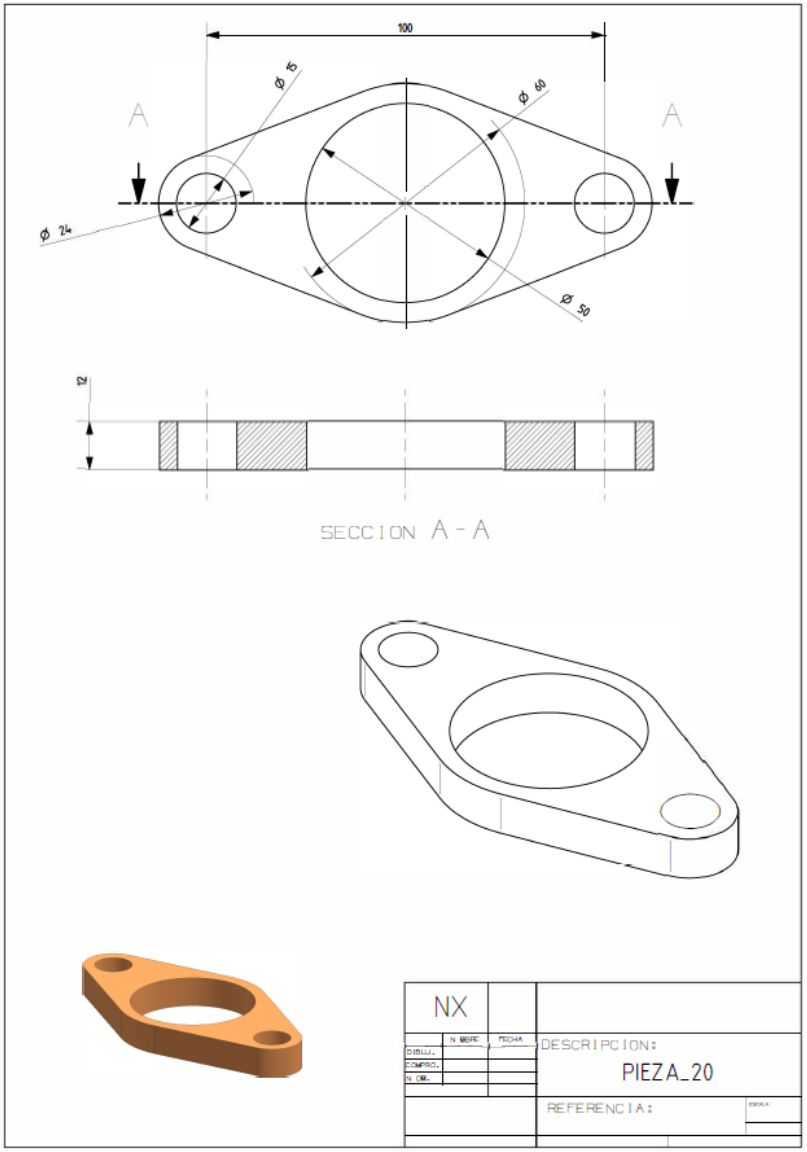
100
Ø 15
Ø 60
A
A
Ø 24
Ø 50
12
SECCION A - A
NX
DESCRIPCION:
PIEZA_20
REFERENCIA:

Basic design with NX 12

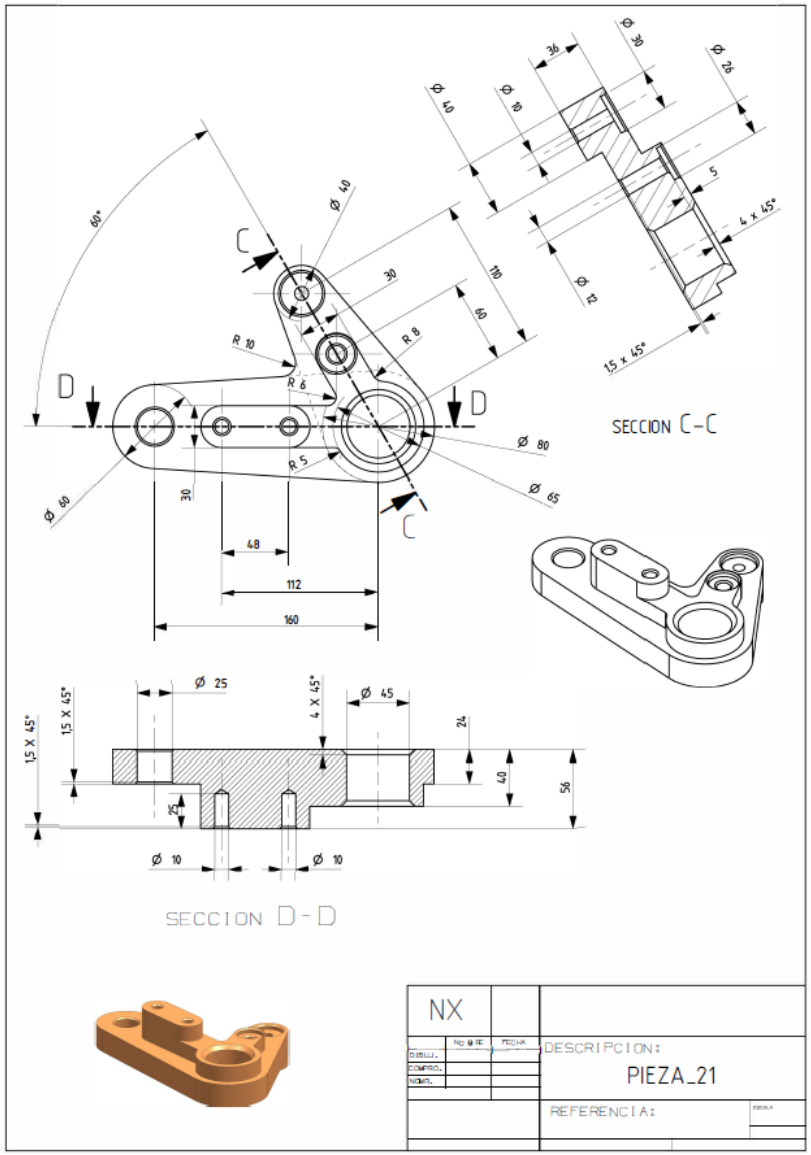

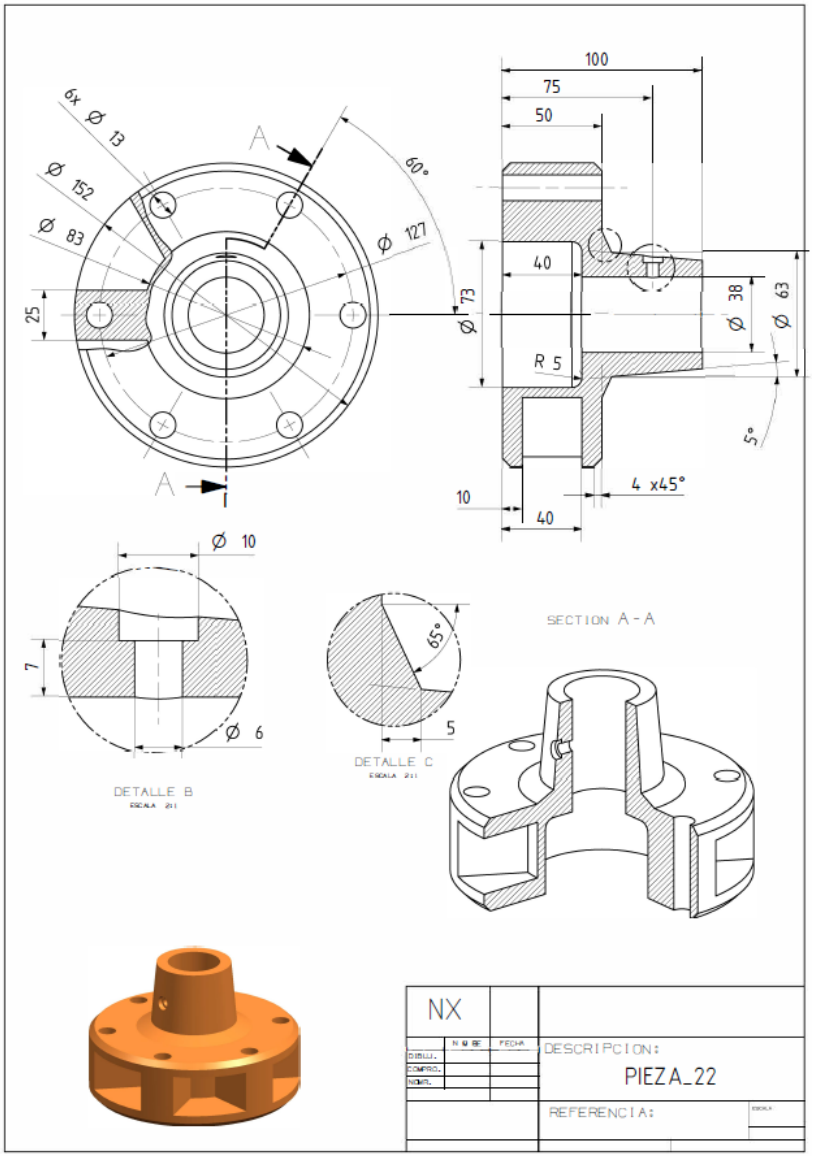

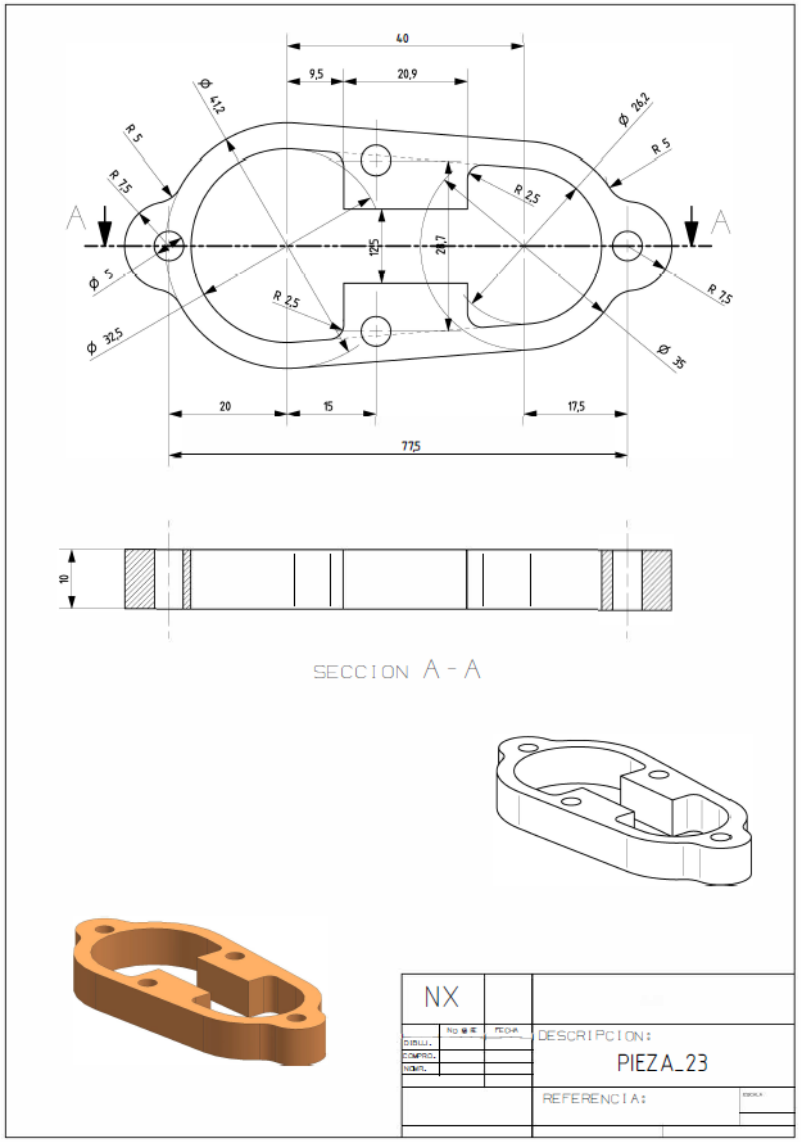
40
9,5
20,9
Ø 4,2
Ø 26,2
R 5
R 7,5
R 2,5
A
A
Ø 5
Ø 32,5
12,5
26,7
Ø 35
20
15
17,5
77,5
10
SECCION A - A
NX
DESCRIPCION:
PIEZA_23
REFERENCIA:

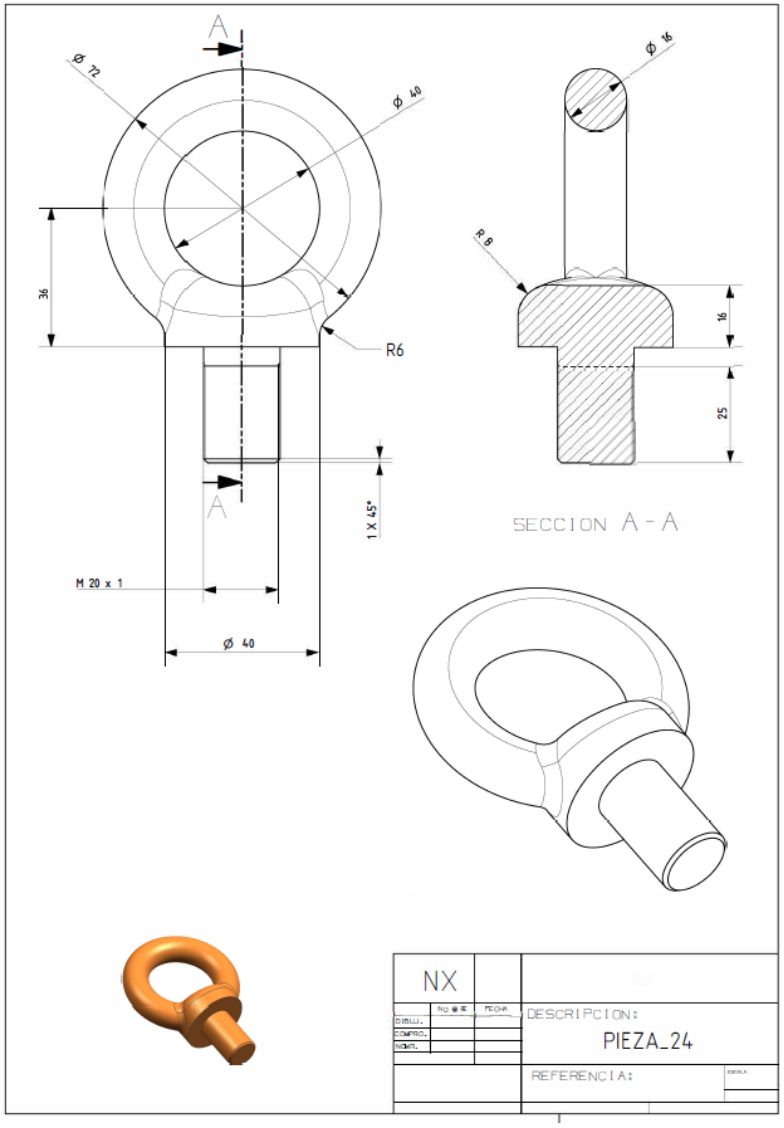
A
Ø 72
Ø 40
Ø 16
R 8
36
R6
16
25
1 X 45°
M 20 x 1
Ø 40
SECCION A - A
NX
DESCRIPCION:
PIEZA_24
REFERENCIA:

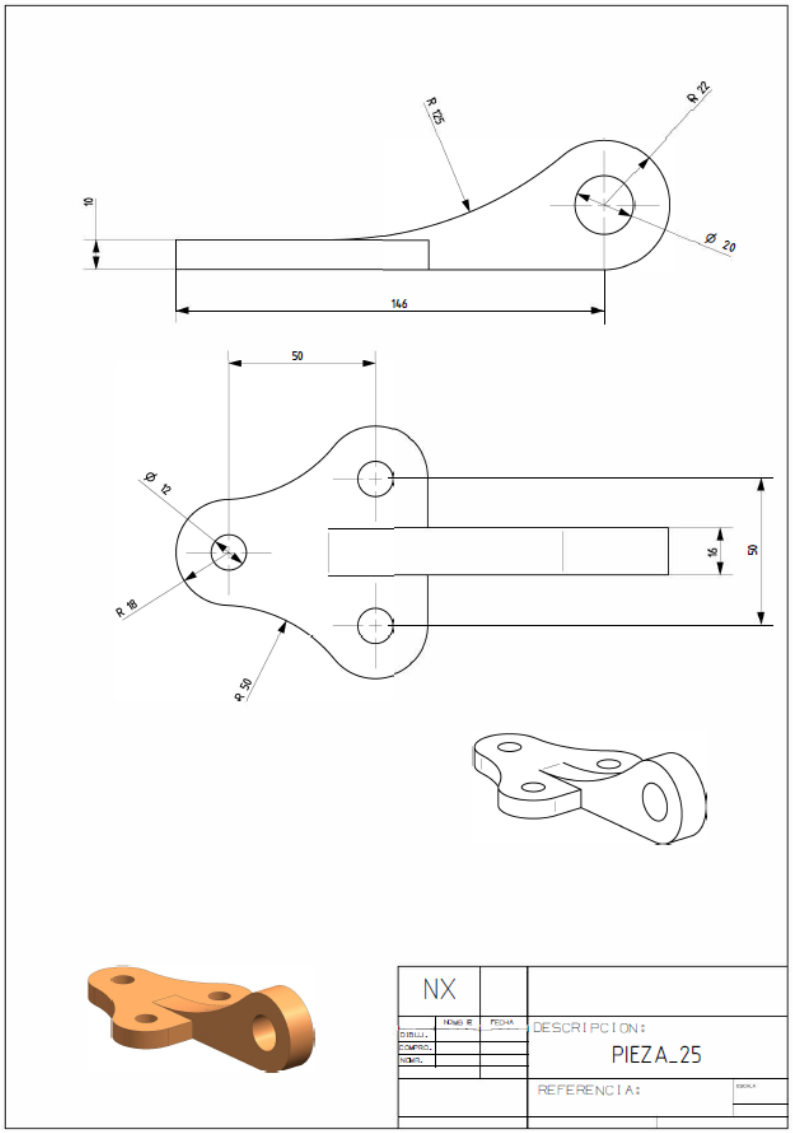
R 125
R 22
10
Ø 20
146
50
Ø 12
R 18
R 50
16
50
NX
DESCRIPCION:
PIEZA_25
REFERENCIA:

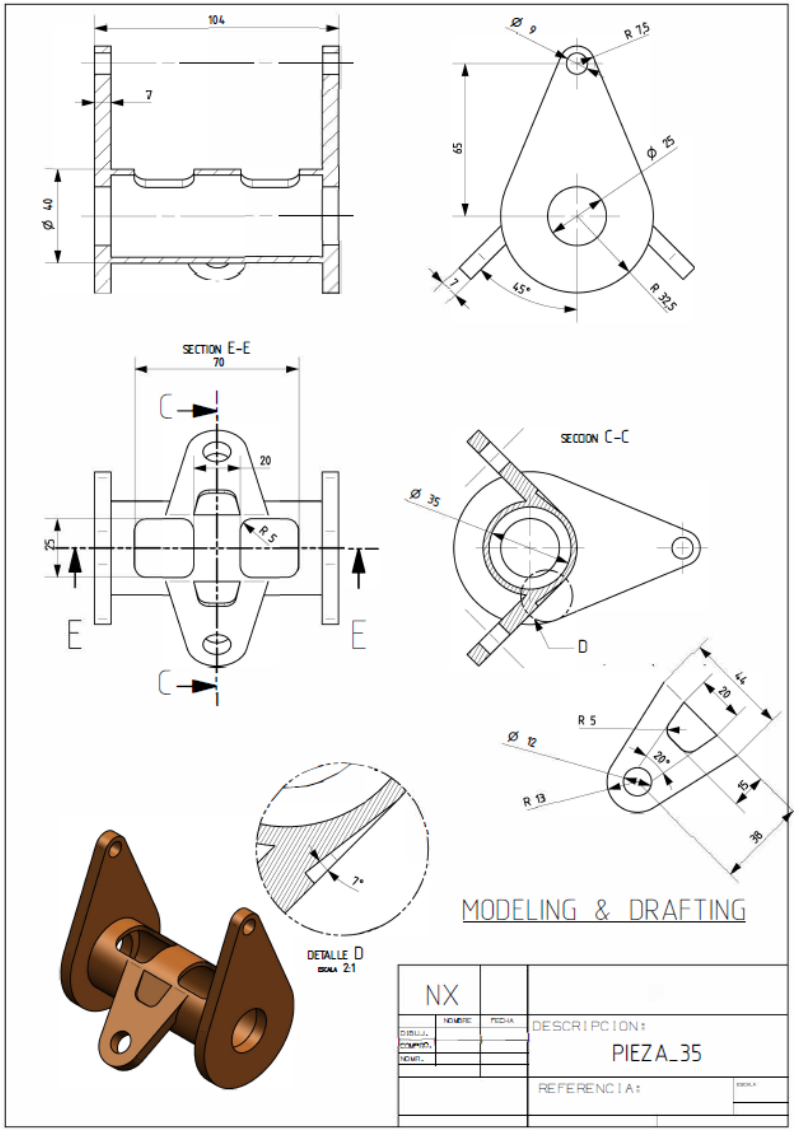
104
7
Ø 40
Ø 9
R 7.5
65
Ø 25
7
45°
R 32.5
SECTION E-E
70
C
20
R 5
25
E
E
C
SECCION C-C
Ø 35
D
R 5
Ø 12
R 13
20°
44
20
10
30
7°
DETALLE D
ESCALA 2:1
MODELING & DRAFTING
NX
DESCRIPCION:
PIEZA_35
REFERENCIA:

ASSEMBLIES

We will start a new assembly by clicking to the new file icon and selecting in the model tab the assembly feature.

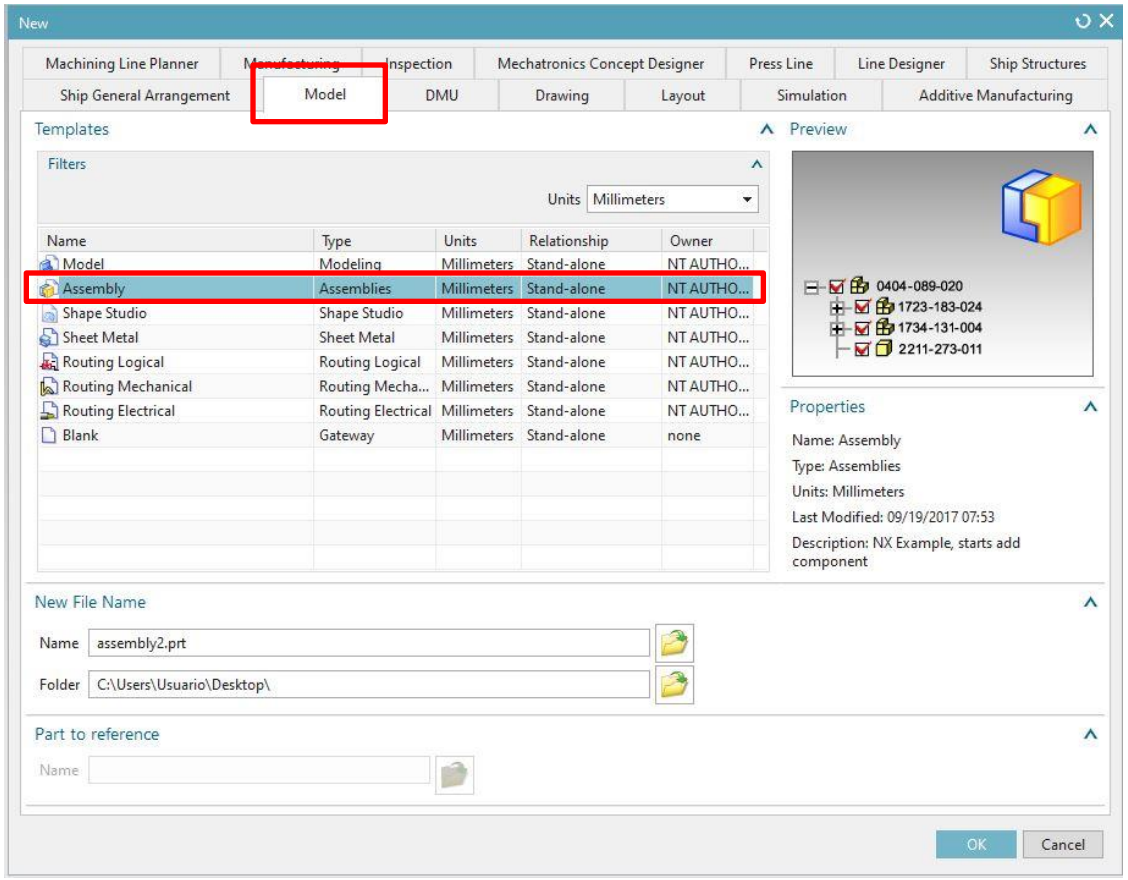

All your different parts that you use or model will appear in the resource bar in the assembly part navigator.

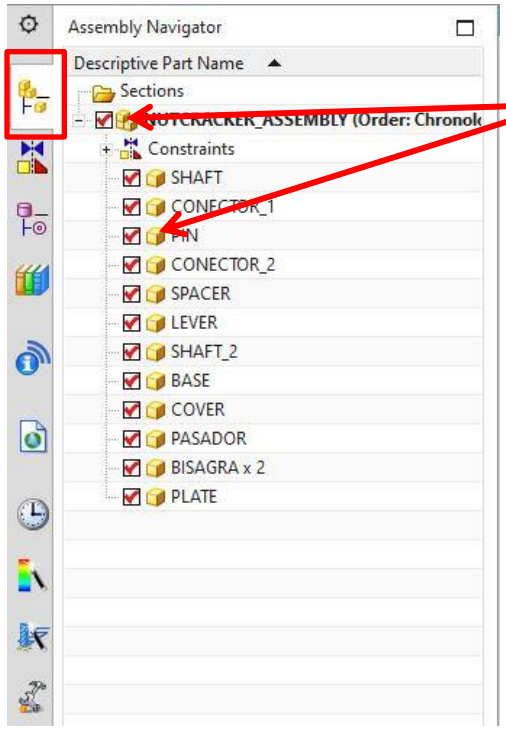

As you can see the icon of a single part is represented by a cube, and the assembly is represented by 3 cubes.

The most relevant tools refered to the assemblies are under the tab of assemblies.

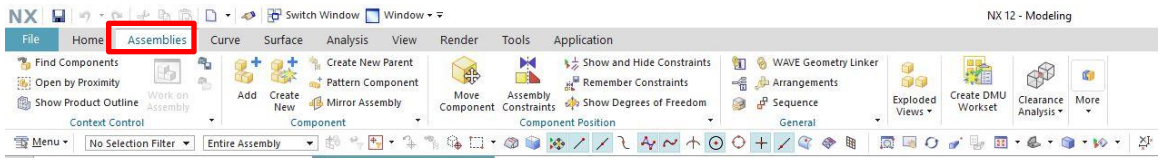

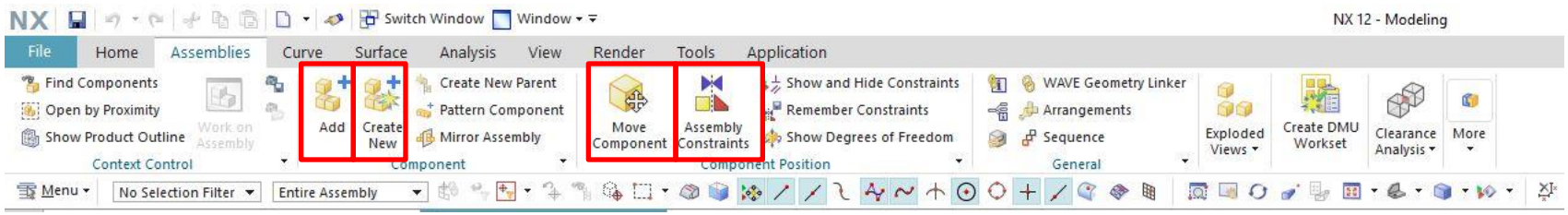

Add an existing component to your assembly, from another project, or folder in your computer

Create a new part that will insert directly to you assembly

With this tool you will move your components inside the assembly were ever you want

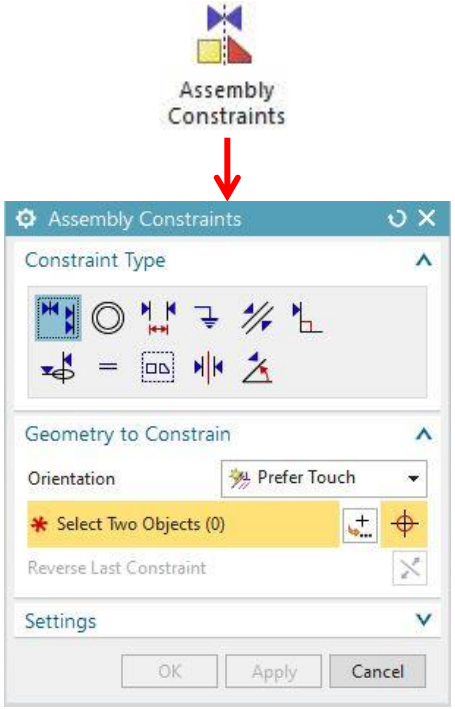

During the course we will see the comands more in deepth, and some more that are not mentioned here.

ASSEMBLIES EXERCISES

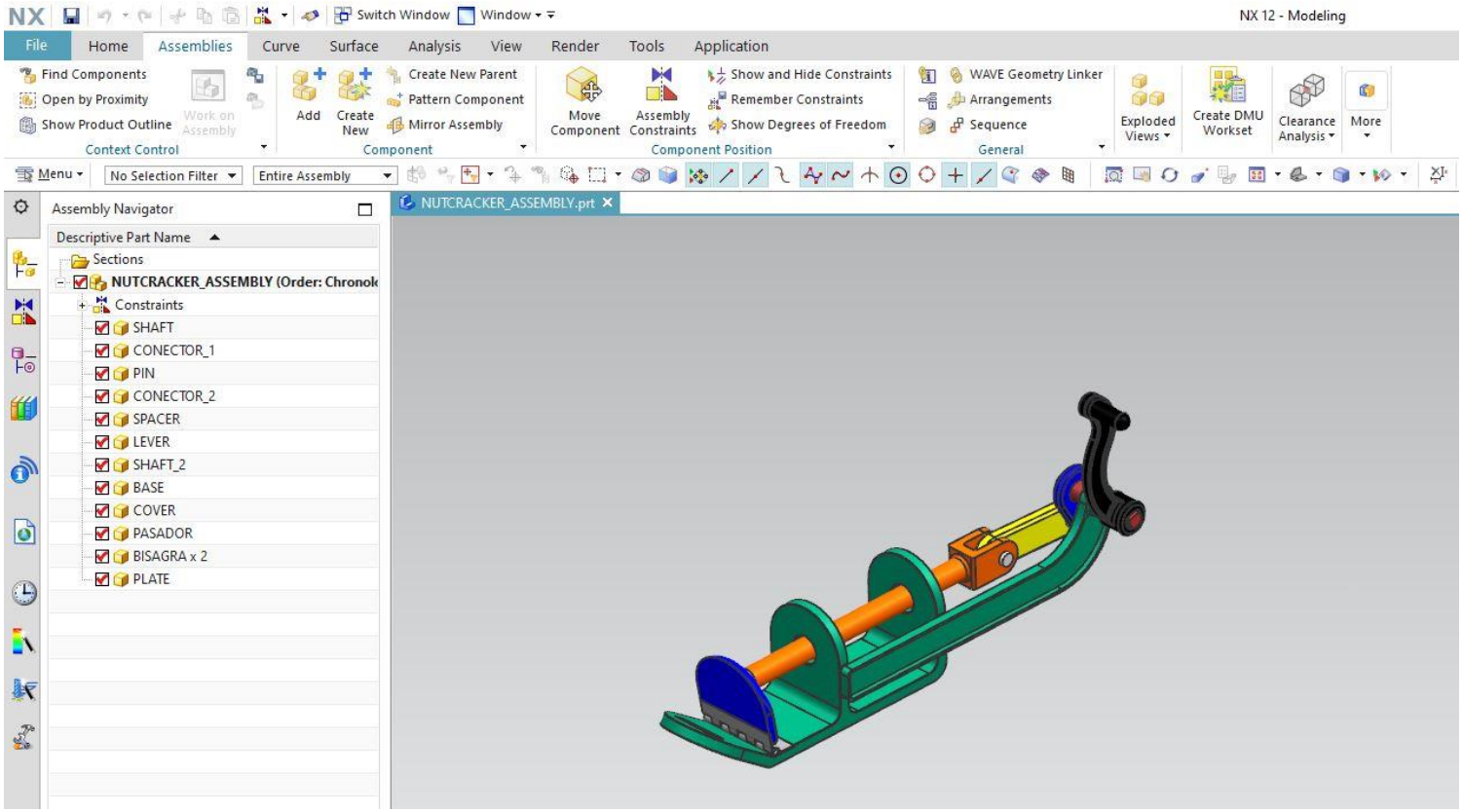

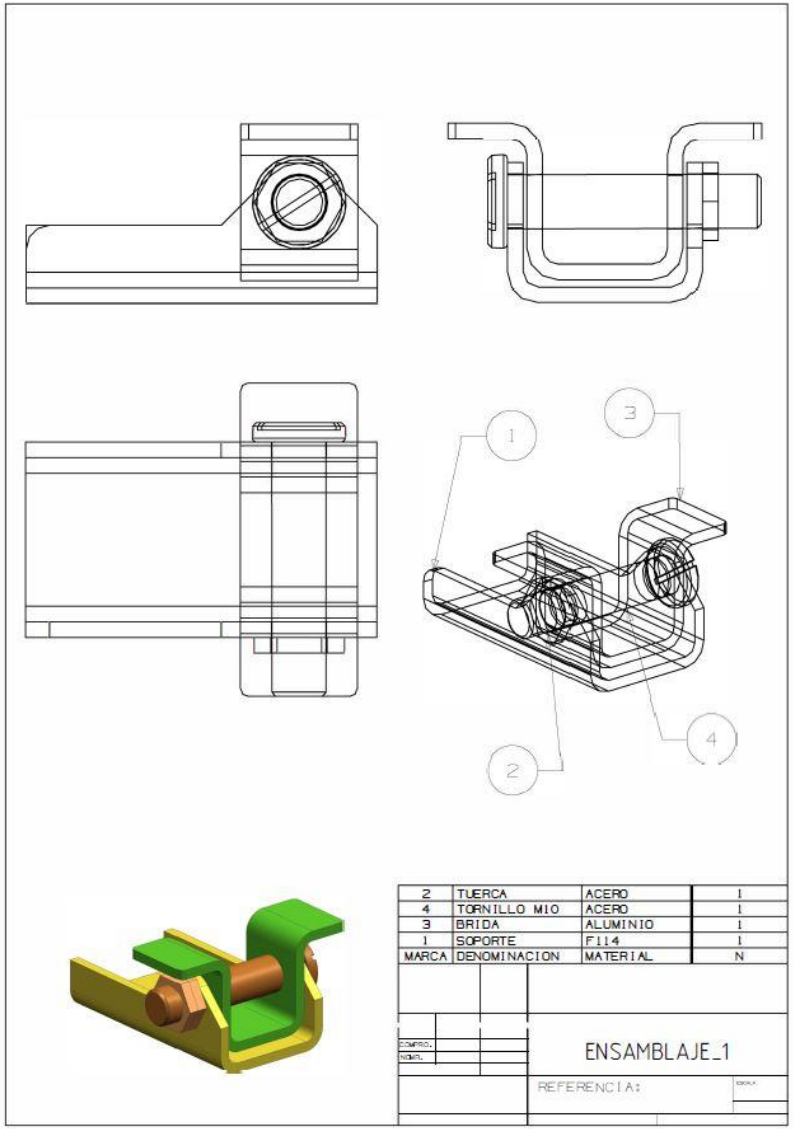
1
3
4
2
2 TUERCA ACERO 1
4 TORNILLO MIO ACERO 1
3 BRIDA ALUMINIO 1
1 SOPORTE F114 1
MARCA DENOMINACION MATERIAL N
ENSAMBLAJE_1
REFERENCIA:

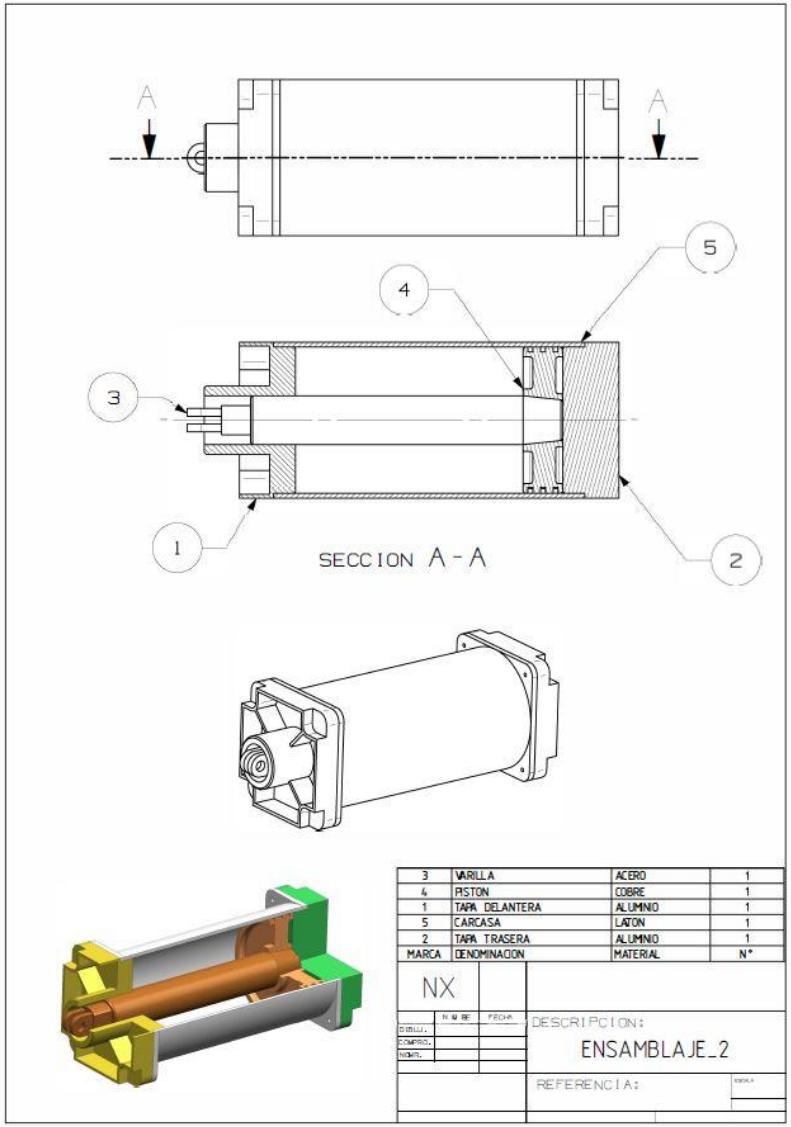
A
A
5
4
3
1
2
SECCION A-A
3 VARILLA ACERO 1
4 PISTON COBRE 1
1 TAPA DELANTERA ALUMINIO 1
5 CARCASA LATON 1
2 TAPA TRASERA ALUMINIO 1
MARCA DENOMINACION MATERIAL N°
NX
DESCRIPCION:
ENSAMBLAJE_2
REFERENCIA:

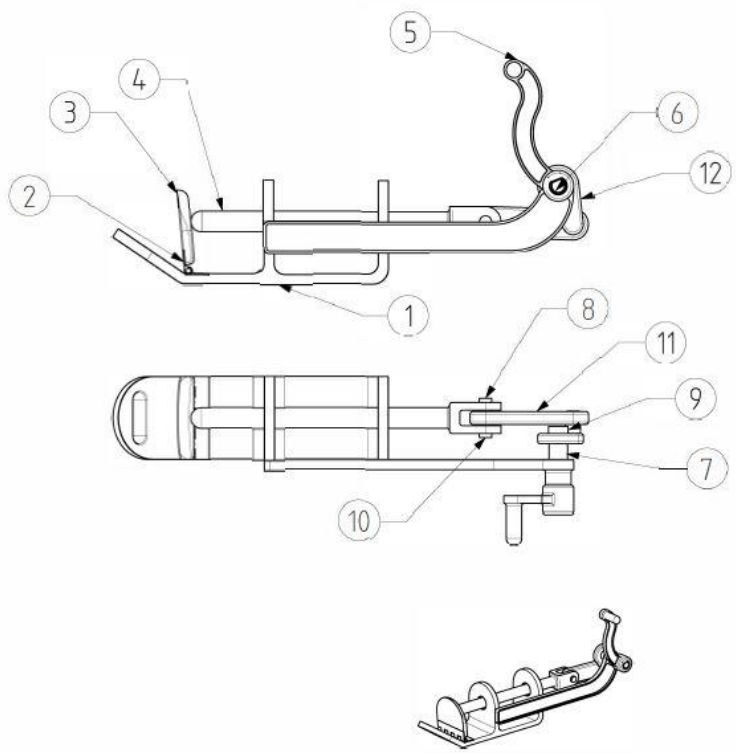

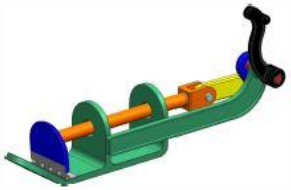

MARCA	DENOMINACION	Nº PIEZAS
12	CONECTOR_2	1
11	CONECTOR_1	1
10	PASADOR	1
9	TAPA	1
8	PIN	2
7	ESPACIADOR	1
6	EJE_2	1
5	MANIVELA	1
4	EJE	1
3	PLATO	1
2	BISAGRA	2
1	BASE	1

NX

DESCRIPCION

ASSY CASCANUECES

REFERENCIA

Basic design with NX 12 (60 h)

Practical exercise

UPenAUTO : 2017-1-ES01-KA203-03858

Erasmus+

UPenAUTO: UPSKILLED ENGINEERING PROFILES FOR THE AUTOMOTIVE SECTOR AND UPTAKE OF ALTERNATE SCHEME IN EUROPE´S HIGHER EDUCATION.

Gestamp

GTI
GESTAMP TECHNOLOGY INSTITUTE

FABRIKAZIOAREN ZENTRO AURRERATUA
CENTRO AVANZADO DE FABRICACIÓN

somorrostro
centro de formación / irakas-gunea

UNIVERSITATEA POLITEHNICA

1.- Ejercicio 1

El ejercicio consiste en la realización de una pieza, a partir del plano entregado. Para ello tendrán que utilizar los conocimientos adquiridos sobre solidos durante la formación. Tiempo máximo 2horas.

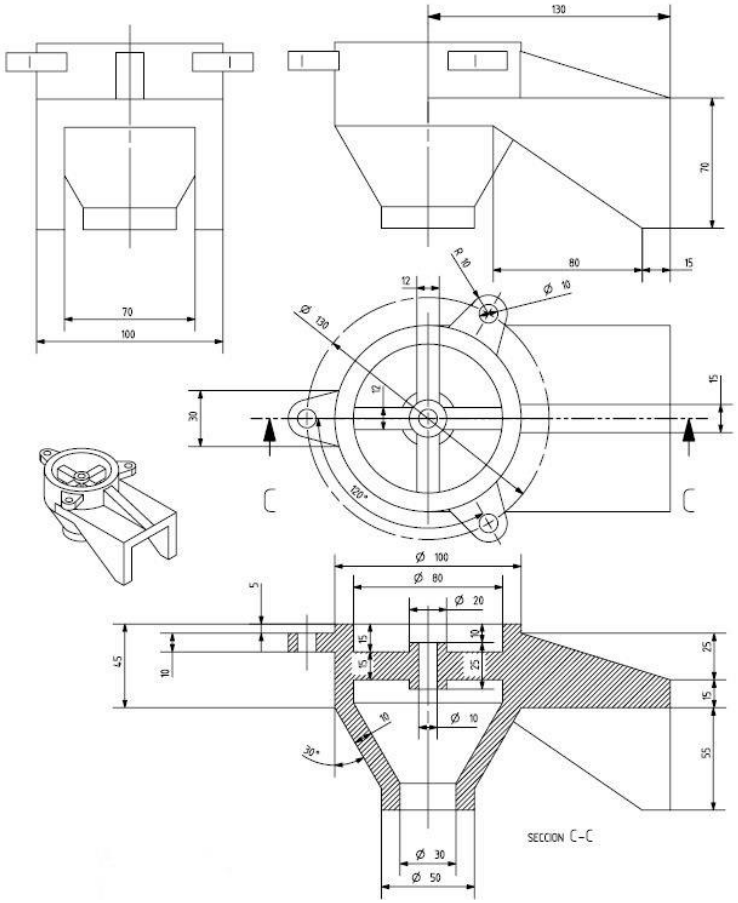

2.- Ejercicio 2

El ejercicio consiste en la realización de una pieza, a partir del plano entregado. Para ello tendrán que utilizar los conocimientos adquiridos sobre superficies durante la formación. Tiempo máximo 2horas.

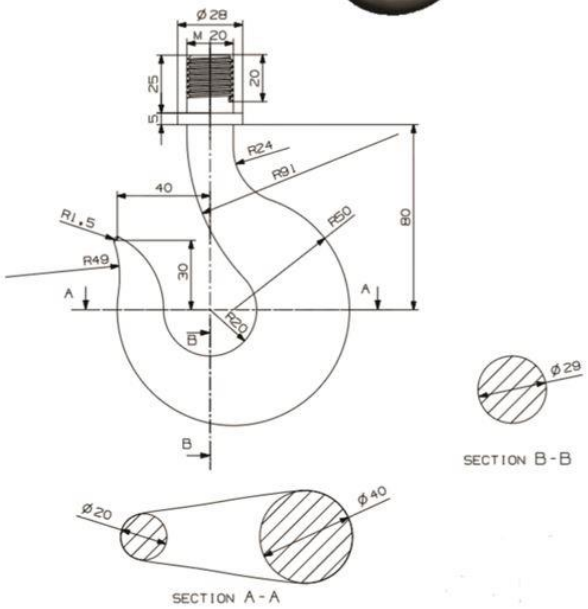

CRITERIOS DE EVALUACION

- La valoración del ejercicio 1 se realizará de la siguiente forma:
  - Se restará 0,25 por cada fallo en la geometría (hasta 2 puntos máximo)
  - Se restará si los sketches están lincados al 3D, proporcionalmente al numero de sketches (hasta 2 puntos máximo)
  - Se restará por cada Sketch no acotado, proporcionalmente al numero de sketches (hasta 2 puntos máximo)
  - A partir de 25 operaciones se restará (hasta 2 puntos máximo)
  - Los agujeros se deben hacer con el comando hole. (hasta 2 puntos máximo)

- La valoración del ejercicio 2 se realizará de la siguiente forma:
  - Se restará 0,25 por cada fallo en la geometría (hasta 2 puntos máximo)
  - Se restará si los sketches están lincados al 3D, proporcionalmente al numero de sketches (hasta 2 puntos máximo)
  - Se restará por cada Sketch no acotado, proporcionalmente al numero de sketches (hasta 2 puntos máximo)
  - A partir de 20 operaciones se restará (hasta 2 puntos máximo)
  - Si las tolereancias de superficies y cosidos es mayor de 0.01mm se restara proporcionalmente. (hasta 2 puntos máximo)