# Advance design with CATIA V5 (90 h)

UPenAUTO : 2017-1-ES01-KA203-03858

Erasmus+

**UPenAUTO: UPSKILLED ENGINEERING PROFILES FOR THE AUTOMOTIVE SECTOR AND UPTAKE OF ALTERNATE SCHEME IN EUROPE´S HIGHER EDUCATION.**

Gestamp

GTI
GESTAMP TECHNOLOGY INSTITUTE

FABRIKAZIOAREN ZENTRO AURRERATUA
CENTRO AVANZADO DE FABRICACIÓN

somorrostro
centro de formación / irakas-gunea

UNIVERSITATEA POLITEHNICA

## GENERAL DESCRIPTION OF THE PROGRESSIVE DIE

## OPERATION TREE ORGANIZATION

## ASSEMBLY REFERENCES

- ADAPTER
- OTHER ASSEMBLY FEATURES

## PROGRESSIVE DIE ASSEMBLY

- INPUT DATA
- DIE ASSEMBLY
- UPPER DIE ASSEMBLY
- LOWER DIE ASSEMBLY

# GENERAL DESCRIPTION OF THE PROGRESSIVE DIE

## OPERATION TREE ORGANIZATION

## ASSEMBLY REFERENCES

- ADAPTER
- OTHER ASSEMBLY FEATURES

## PROGRESSIVE DIE ASSEMBLY

- INPUT DATA
- DIE ASSEMBLY
- UPPER DIE ASSEMBLY
- LOWER DIE ASSEMBLY

# GENERAL DESCRIPTION OF THE PROGRESSIVE DIE

**Moving parts**

1. UPPER BASE
2. HOLDER
3. PUNCH HOLDER
4. PUNCHES
5. DOLLY
6. COLUMNS

**Fixed parts**

8. LOWER BASE
9. MATRIX
10. BUSHING GUIDES

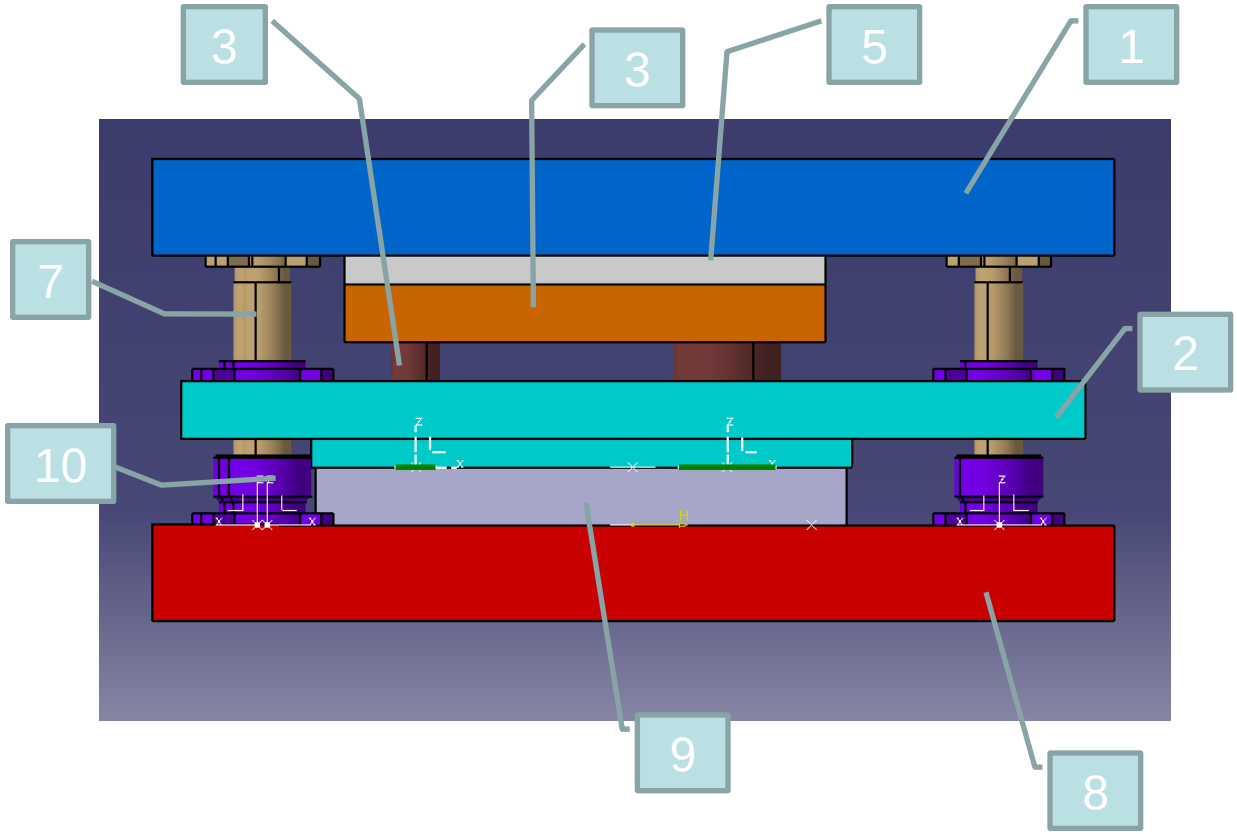

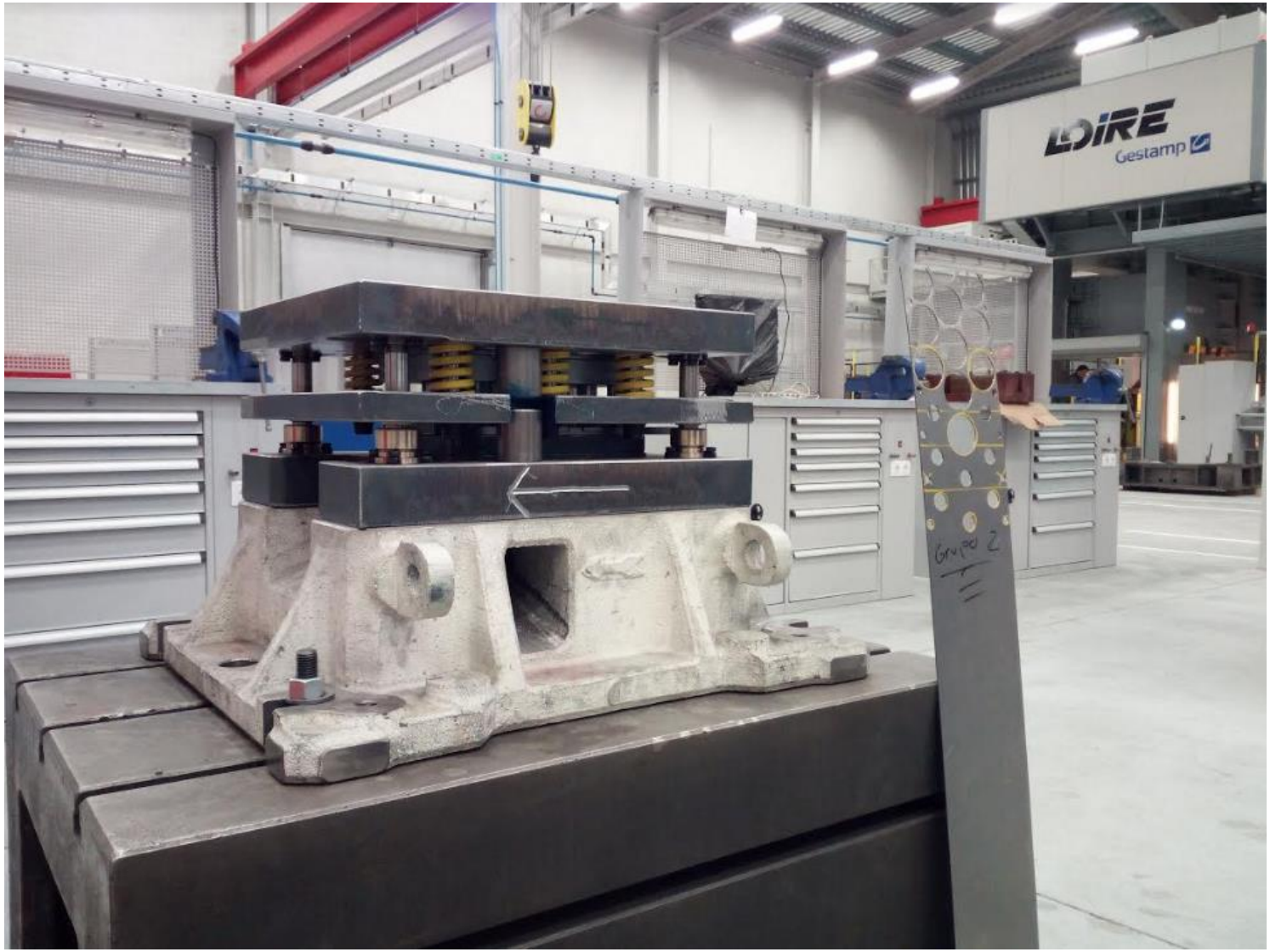
DIRE
Gestamp

GENERAL DESCRIPTION OF THE PROGRESSIVE DIE

**OPERATION TREE ORGANIZATION**

ASSEMBLY REFERENCES

- ADAPTER
- OTHER ASSEMBLY FEATURES

PROGRESSIVE DIE ASSEMBLY

- INPUT DATA
- DIE ASSEMBLY
- UPPER DIE ASSEMBLY
- LOWER DIE ASSEMBLY

# OPERATION TREE ORGANIZATION

## MAIN PRODUCT

### INPUT DATA

- Full Adapter
- Plate

### LOWER DIE

- **Bottom Base**
- **Matrix Holder**

### UPPER DIE

- **Upper Base**
- **Holder**

### ASSEMBLY COMPONENT

- Part Model
- Standard Elements
- Construction Elements

# OPERATION TREE ORGANIZATION

## MAIN PRODUCT

### INPUT DATA

- Full Adapter
- Plate

### LOWER DIE

- Bottom Base
- Matrix Holder

### UPPER DIE

- Upper Base
- Holder

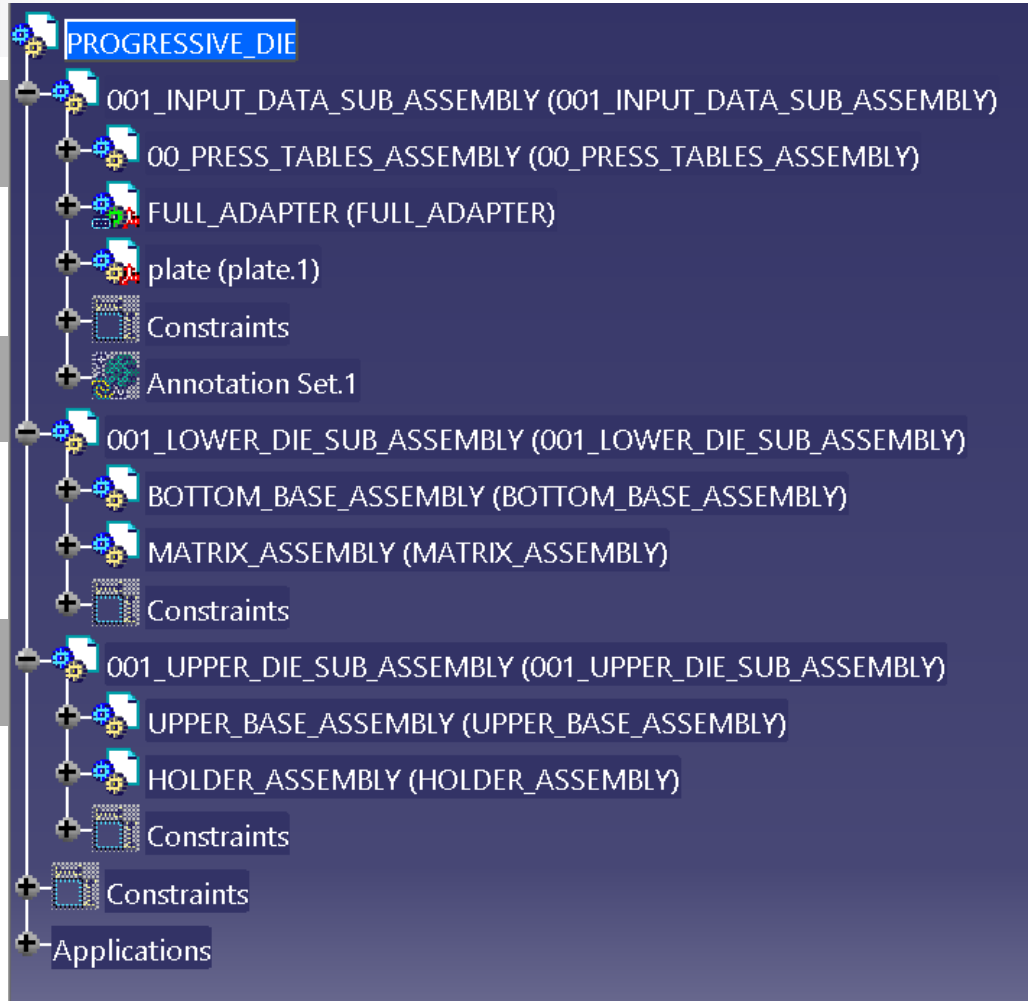

# OPERATION TREE ORGANIZATION

## MAIN PRODUCT

### INPUT DATA

- Full Adapter
- Plate

### LOWER DIE

- Bottom Base
- Matrix Holder

### UPPER DIE

- Upper Base
- Holder

GENERAL DESCRIPTION OF THE PROGRESSIVE DIE

OPERATION TREE ORGANIZATION

**ASSEMBLY REFERENCES**

- ADAPTER
- OTHER ASSEMBLY FEATURES

PROGRESSIVE DIE ASSEMBLY

- INPUT GEOMETRY
- DIE ASSEMBLY
- UPPER DIE ASSEMBLY
- LOWER DIE ASSEMBLY

# ADAPTER

## TO REFERENCE ELEMENTS OF DIFFERENT ASSEMBLIES

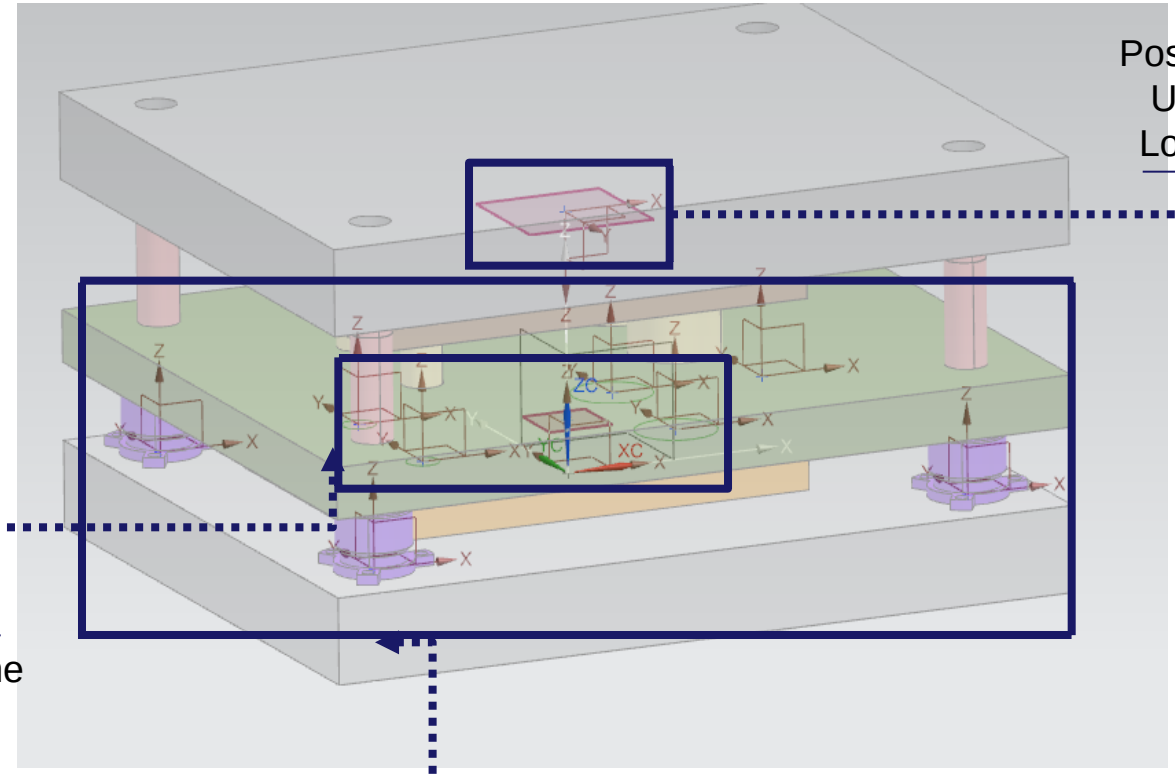

Position of the Upper and Lower Base

Position of the punches

Position of the Guide Columns

# ADAPTER

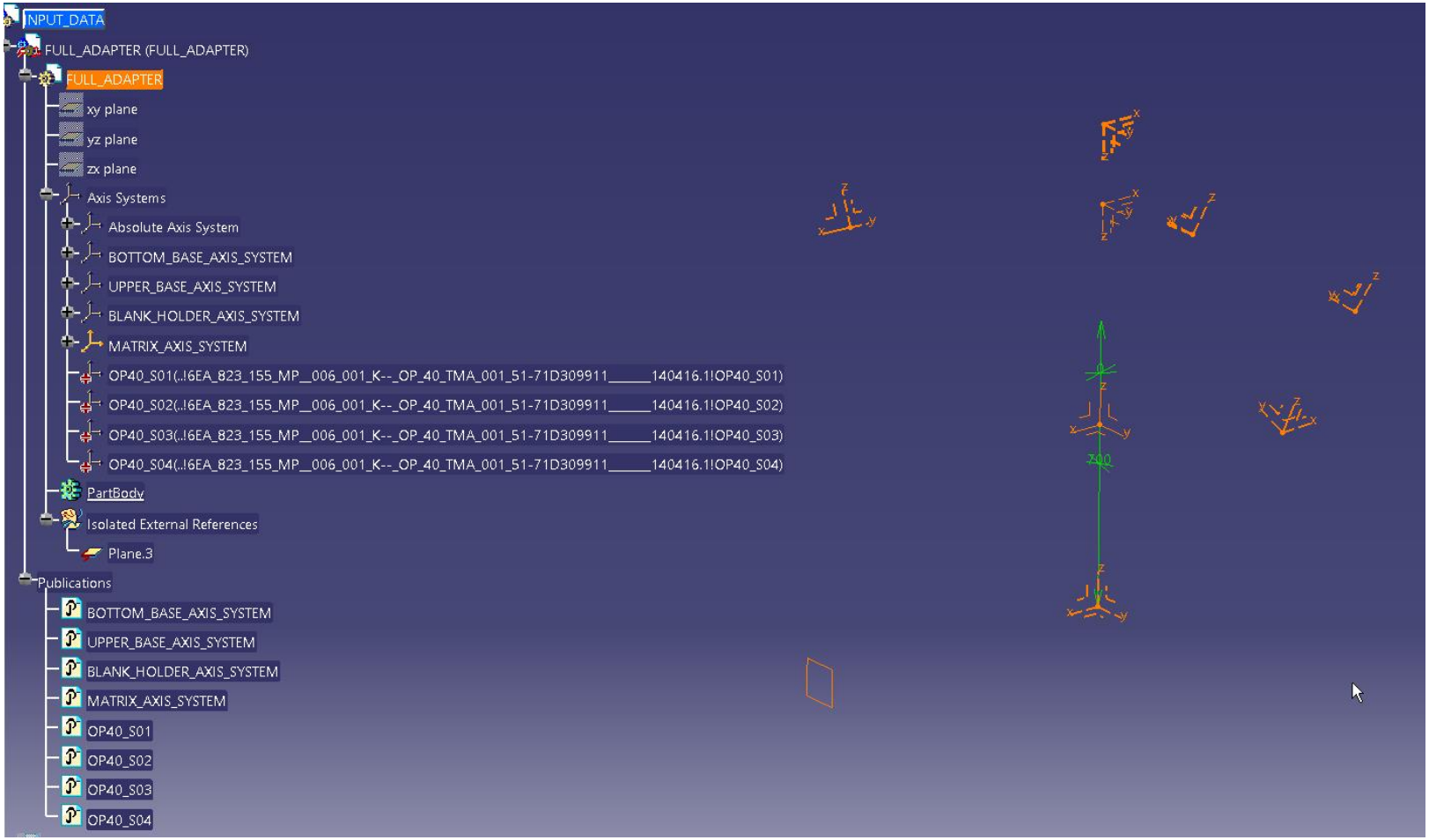
INPUT_DATA
FULL_ADAPTER (FULL_ADAPTER)
FULL_ADAPTER
xy plane
yz plane
zx plane
Axis Systems
Absolute Axis System
BOTTOM_BASE_AXIS_SYSTEM
UPPER_BASE_AXIS_SYSTEM
BLANK_HOLDER_AXIS_SYSTEM
MATRIX_AXIS_SYSTEM
OP40_S01(..!6EA_823_155_MP__006_001_K--_OP_40_TMA_001_51-71D309911_____140416.1!OP40_S01)
OP40_S02(..!6EA_823_155_MP__006_001_K--_OP_40_TMA_001_51-71D309911_____140416.1!OP40_S02)
OP40_S03(..!6EA_823_155_MP__006_001_K--_OP_40_TMA_001_51-71D309911_____140416.1!OP40_S03)
OP40_S04(..!6EA_823_155_MP__006_001_K--_OP_40_TMA_001_51-71D309911_____140416.1!OP40_S04)
PartBody
Isolated External References
Plane.3
Publications
BOTTOM_BASE_AXIS_SYSTEM
UPPER_BASE_AXIS_SYSTEM
BLANK_HOLDER_AXIS_SYSTEM
MATRIX_AXIS_SYSTEM
OP40_S01
OP40_S02
OP40_S03
OP40_S04

# ADAPTER

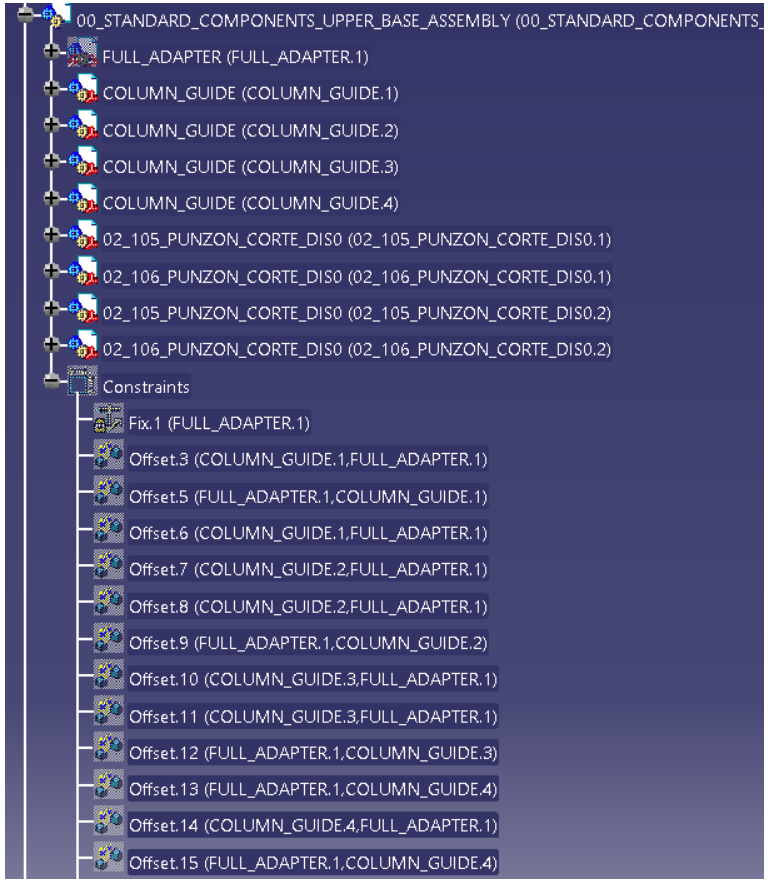


EVERYTHING IS CONSTRAINED TO THE FULL ADAPTER

# OTHER ASSEMBLY FEATURES

ORGANIZATION IS ESSENTIAL: Also inside model parts

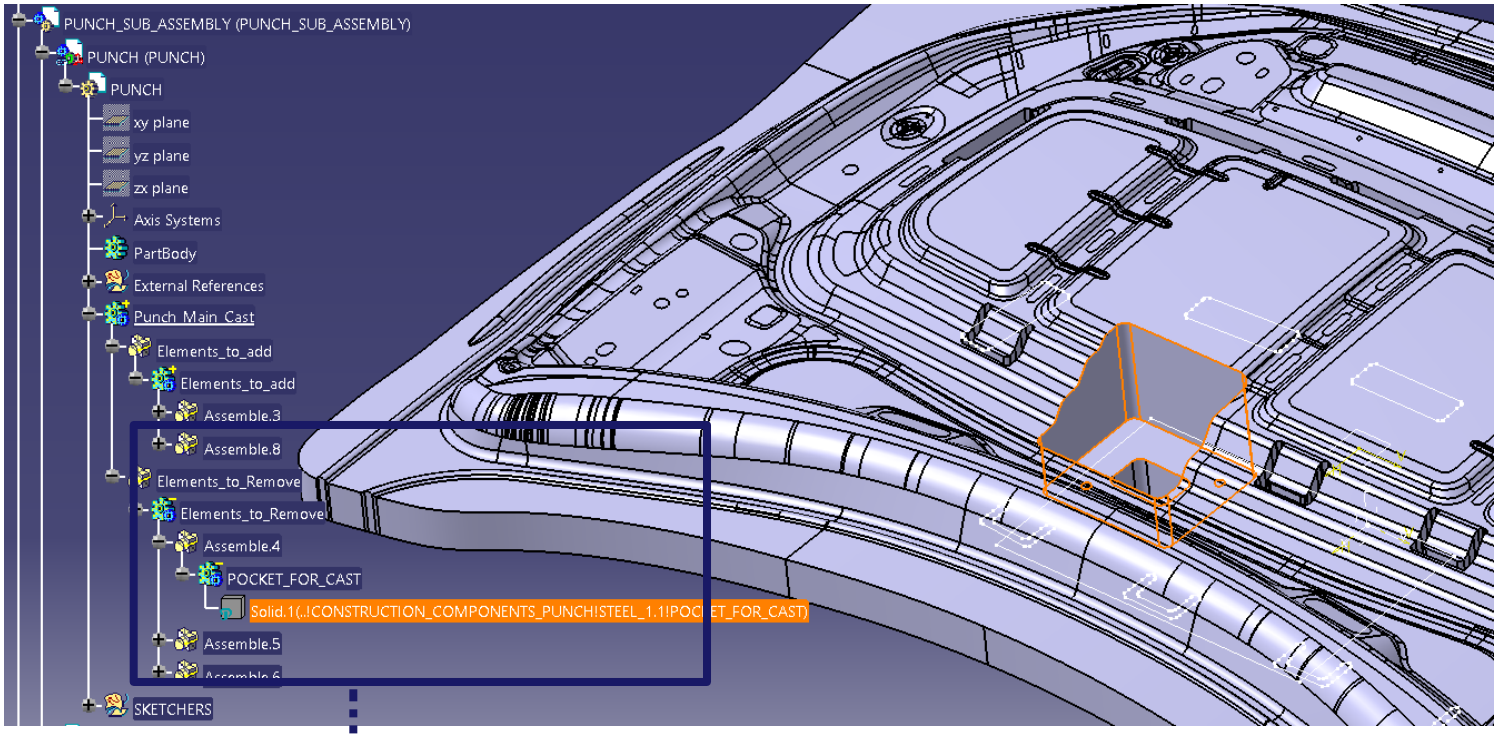


When a geometry depends on another model or assembly: we link the bodies to make the dependent feature

# ICON TREE SYMBOLS

| | Part and Product Structure icons | General Specification Tree icons |
|---|---|---|
| General Design | Product | Part |
| | Component /Sub-Product | Main solid body |
| | Component with geometrical representation | Body |
| | Component with Deactivated representation | Switch to Non-Hybrid Design (During Session) |
| | Component not found | Switch to Hybrid Design (During Session) |
| | Unloaded Component | Geometrical Set |
| | Deactivated Component | Ordered Geometrical Set |
| | Flexible Component | Geometrical Set Group |
| | Assembly Feature | Feature in Hide Mode |
| Design in Context | Original instance of Contextual Part (Root Context) | Unresolved Feature |
| | Original instance (Root in not the Context) | Deactivated Feature |
| | Occurrence Instance of Contextual Part | Feature to be updated |
| | Published Geometry | Isolated Geometry |
| | External References | Dead Geometry with link |
| | Geometry Link is OK | Dead Geometry without link |
| | Geometry link is not synchronized | "Power Copy" Feature |
| | Geometry is not loaded | User Defined Feature (UDF) |
| | Geometry Link is deactivated | UDF Template |

GENERAL DESCRIPTION OF THE PROGRESSIVE DIE

OPERATION TREE ORGANIZATION

ASSEMBLY REFERENCES

- ADAPTER
- OTHER ASSEMBLY FEATURES

**PROGRESSIVE DIE ASSEMBLY**

- INPUT DATA
- DIE ASSEMBLY
- UPPER DIE ASSEMBLY
- LOWER DIE ASSEMBLY

# INPUT DATA

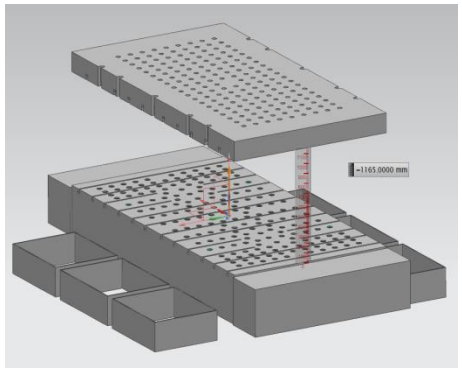

POSITIONING

CONSTRUCTIVE REQUIREMENTS

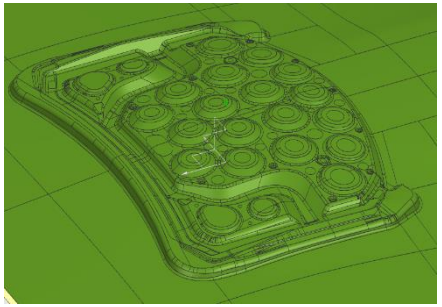

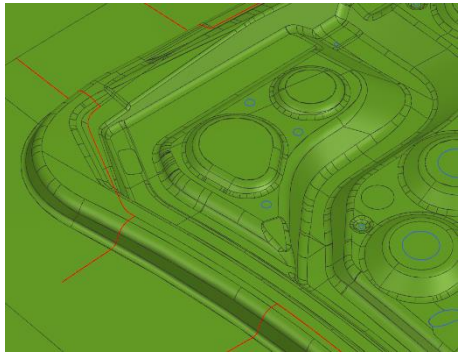

OPERATION DATA

ADAPTER

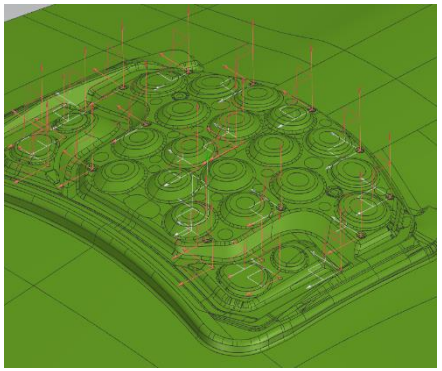

# INPUT DATA

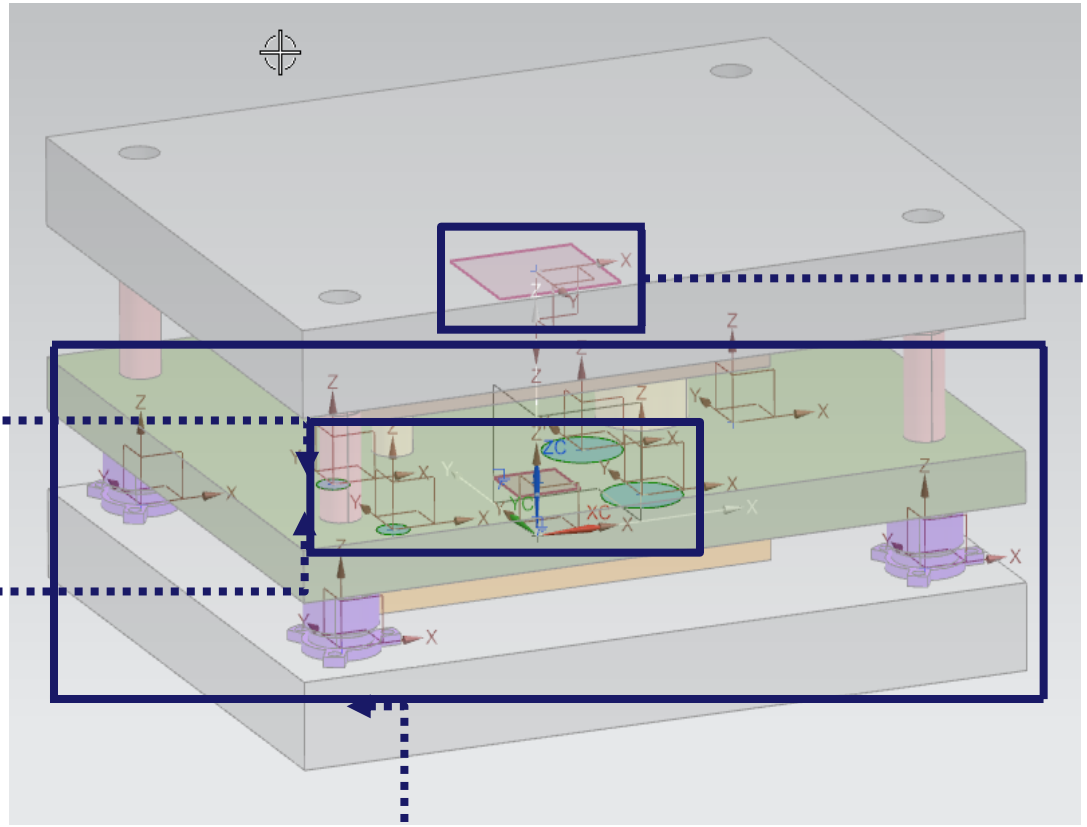

Plate that defines the Punches position

Position of the Upper and Lower Base

Position of the punches

Position of the Guide Columns

# INPUT DATA

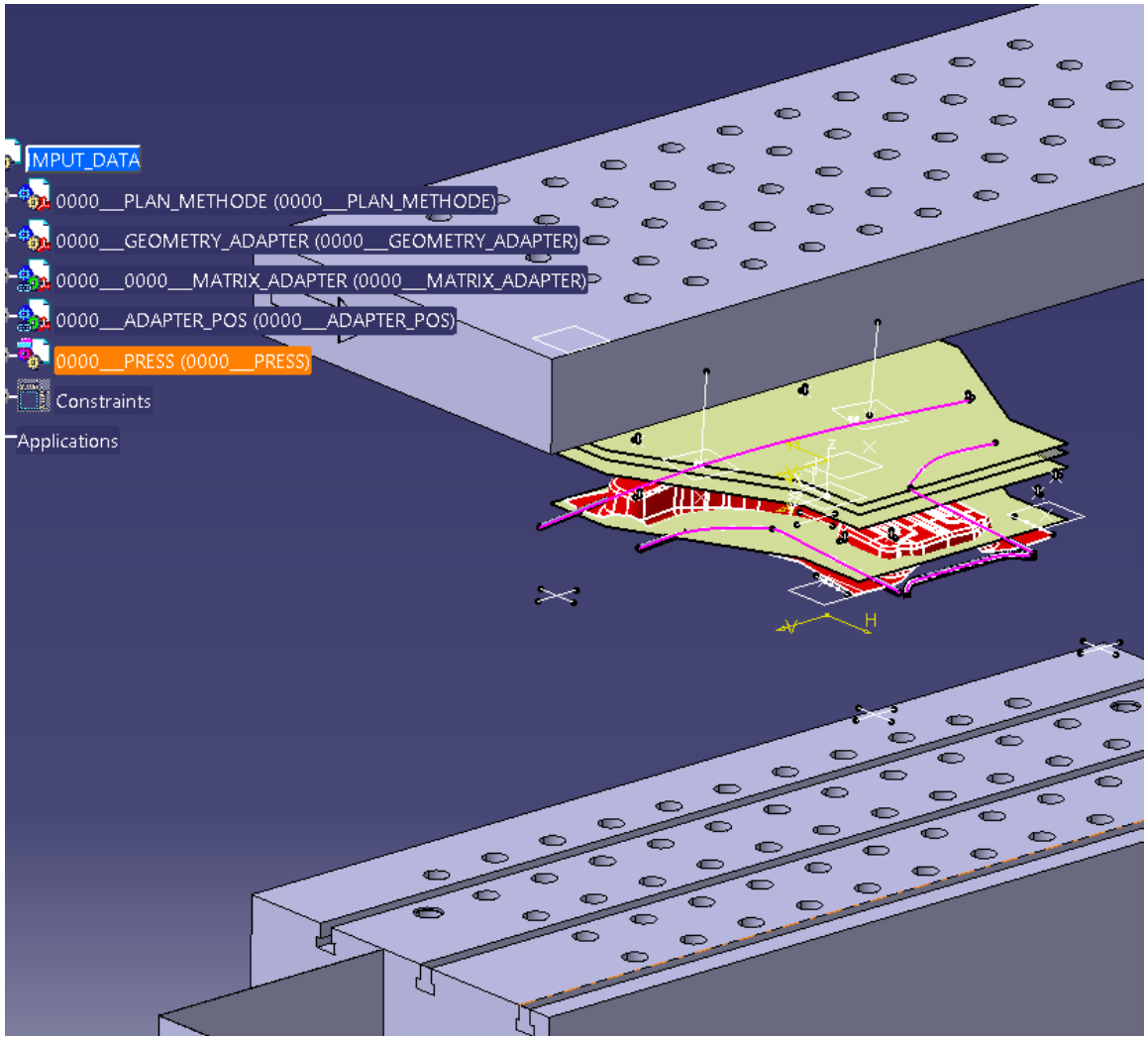
MPUT_DATA
0000__PLAN_METHODE (0000__PLAN_METHODE)
0000__GEOMETRY_ADAPTER (0000__GEOMETRY_ADAPTER)
0000__0000__MATRIX_ADAPTER (0000__MATRIX_ADAPTER)
0000__ADAPTER_POS (0000__ADAPTER_POS)
0000__PRESS (0000__PRESS)
Constraints
Applications

# PROGRESSIVE DIE ASSEMBLY

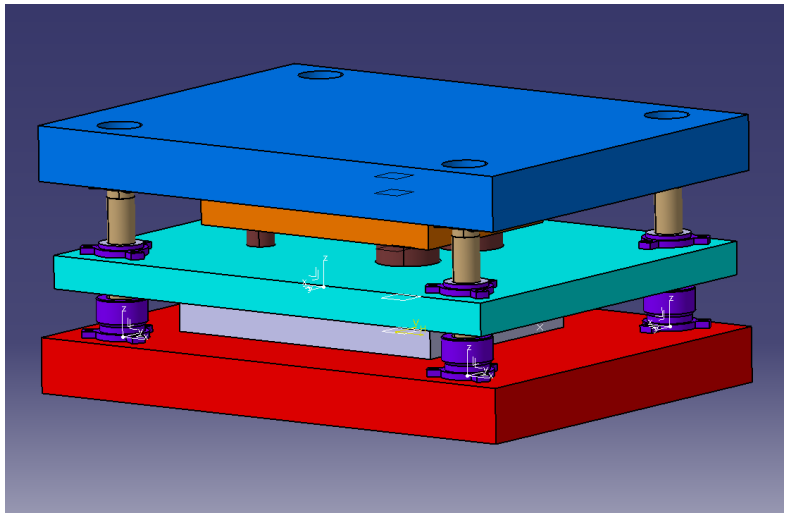

THE WHOLE DIE ASSEMBLY

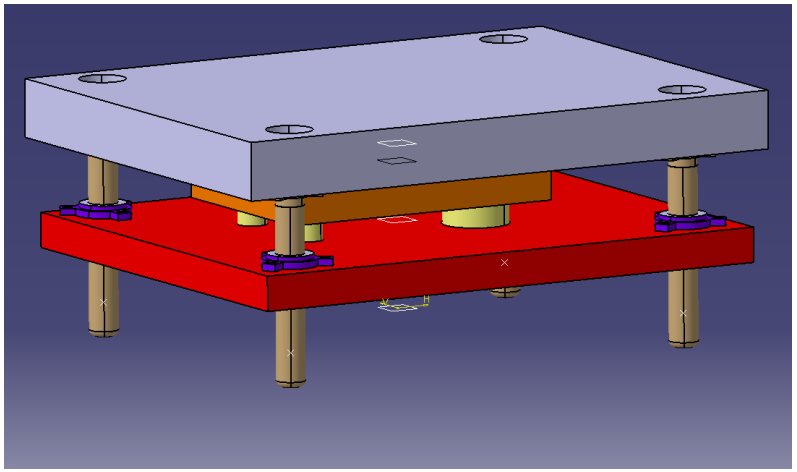

UPPER DIE SUB-ASSEMBLY

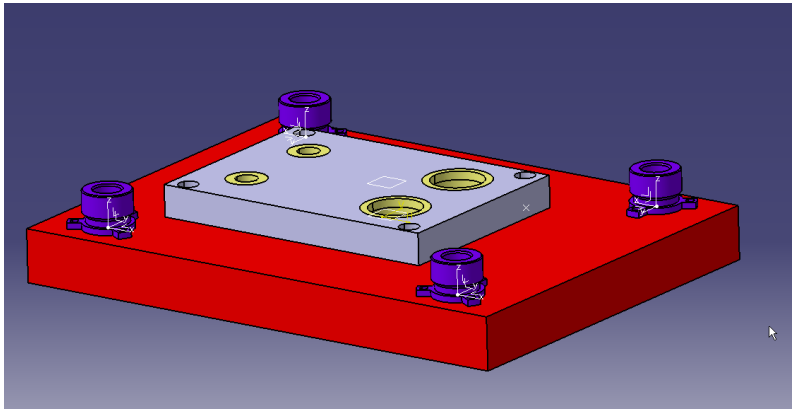

LOWER DIE SUB-ASSEMBLY

# UPPER DIE SUB-ASSEMBLY

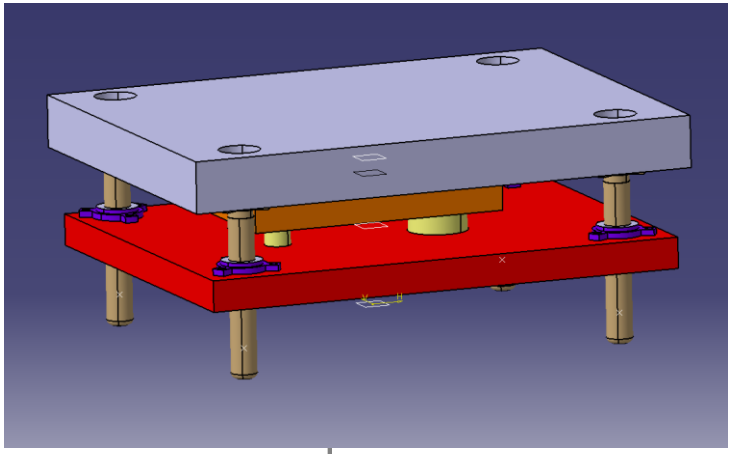

## UPPER BASE

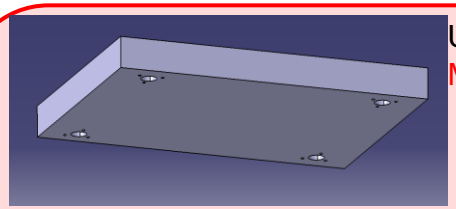

UPPER BASE
MAIN CAST PART

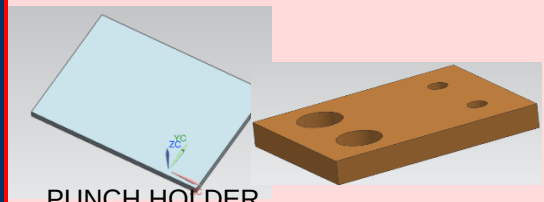

PUNCH HOLDER
DOLLY
CONSTRUCTION COMPONENT

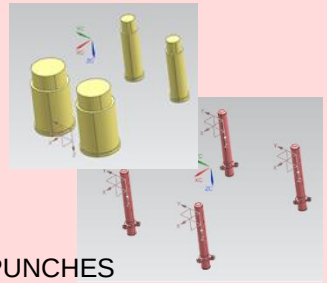

PUNCHES
GUIDE PILLAR
STANDARD COMPONENTS

## PUNCH HOLDER

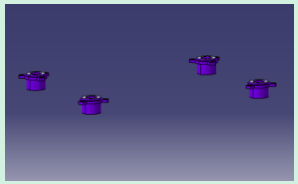

BUSHING GUIDES

STANDARD COMPONENTS

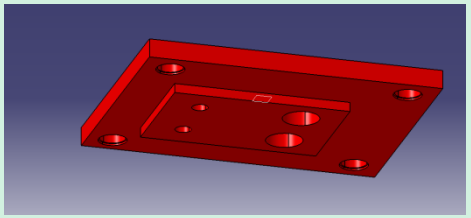

HOLDER
MAIN CAST PART

Advanced design with CATIA V5

# UPPER DIE SUB-ASSEMBLY

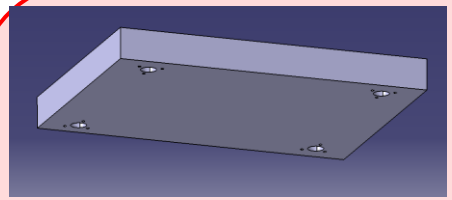

UPPER BASE
MAIN CAST PART

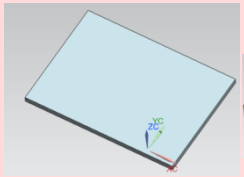

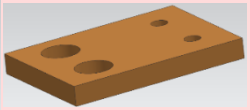

PUNCH HOLDER
DOLLY
CONSTRUCTION COMPONENT

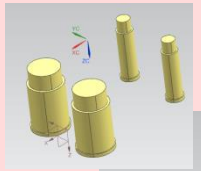

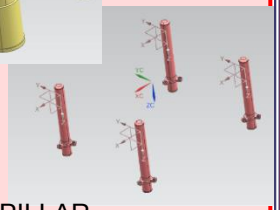

PUNCH
GUIDE PILLAR
STANDARD COMPONENTS

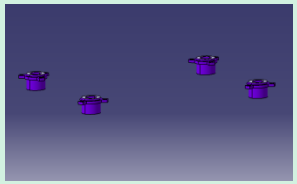

BUSHING GUIDES
STANDARD
COMPONENTS

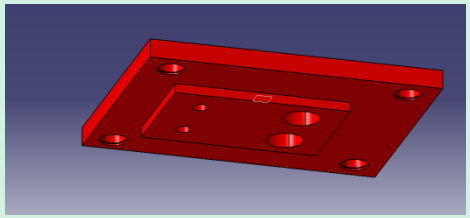

HOLDER
MAIN CAST PART

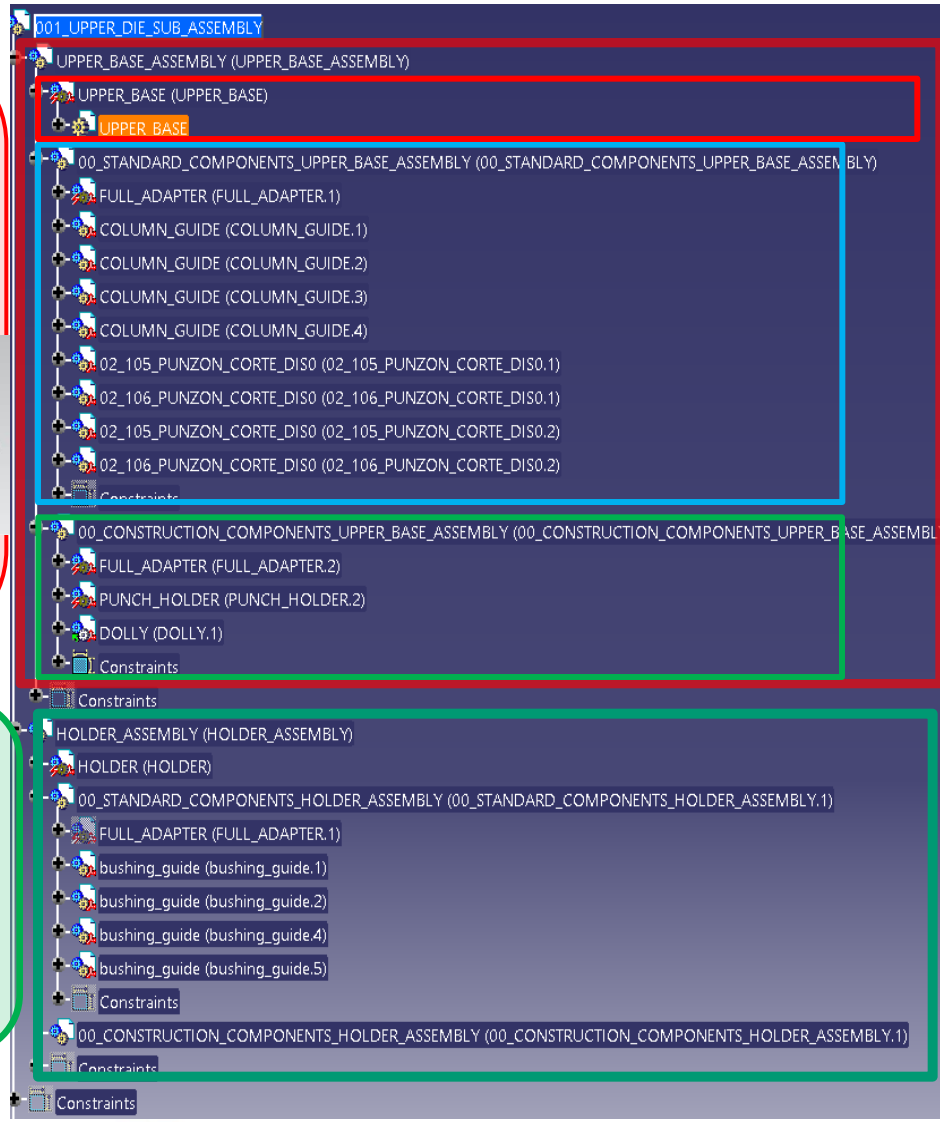

# UPPER DIE SUB-ASSEMBLY

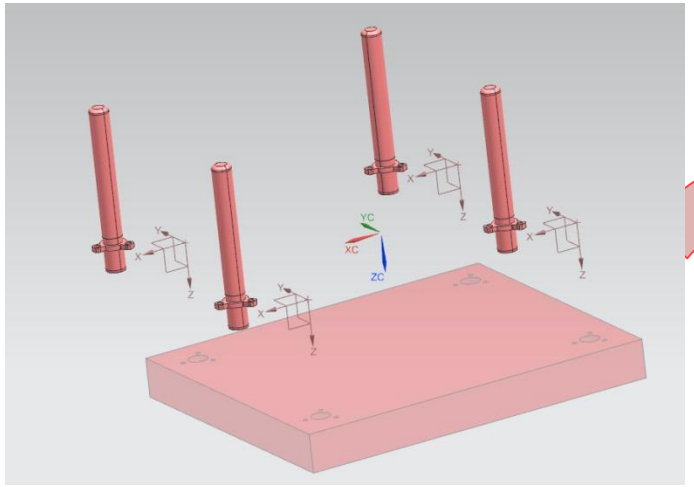

CONSTRAINTS

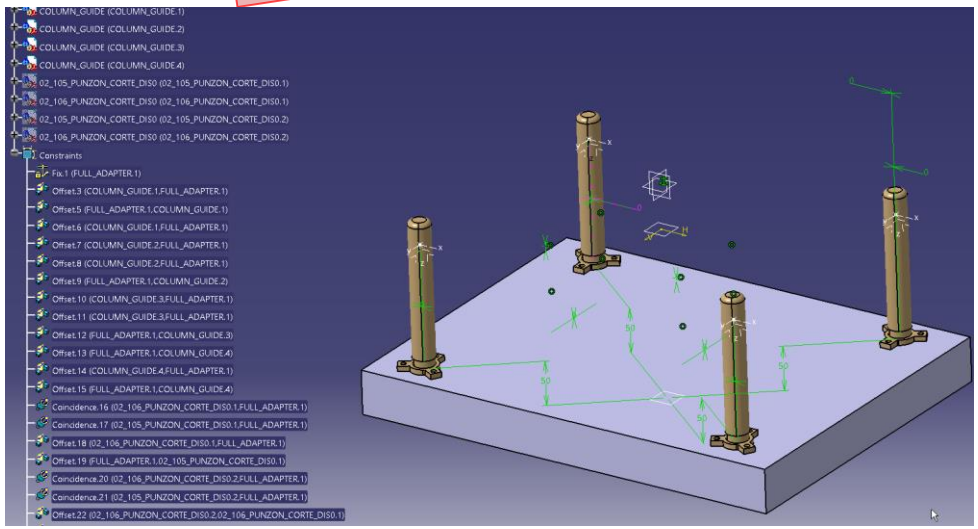

# UPPER DIE SUB-ASSEMBLY

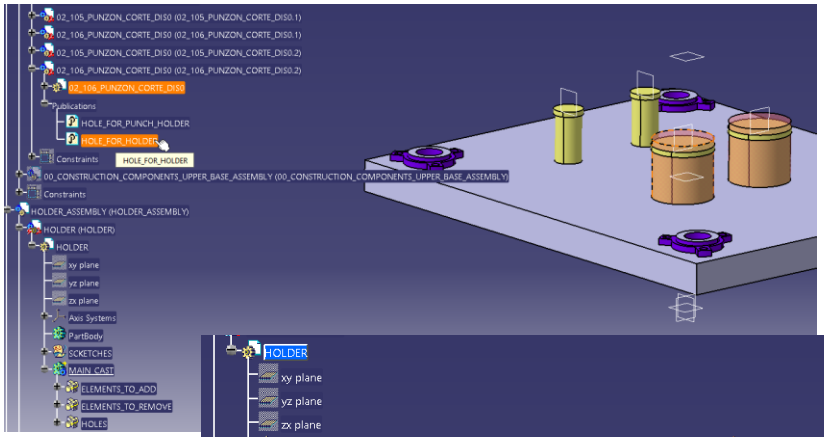


COPY PUBLISHED GEOMETRY
FROM STANDARD ELEMENT

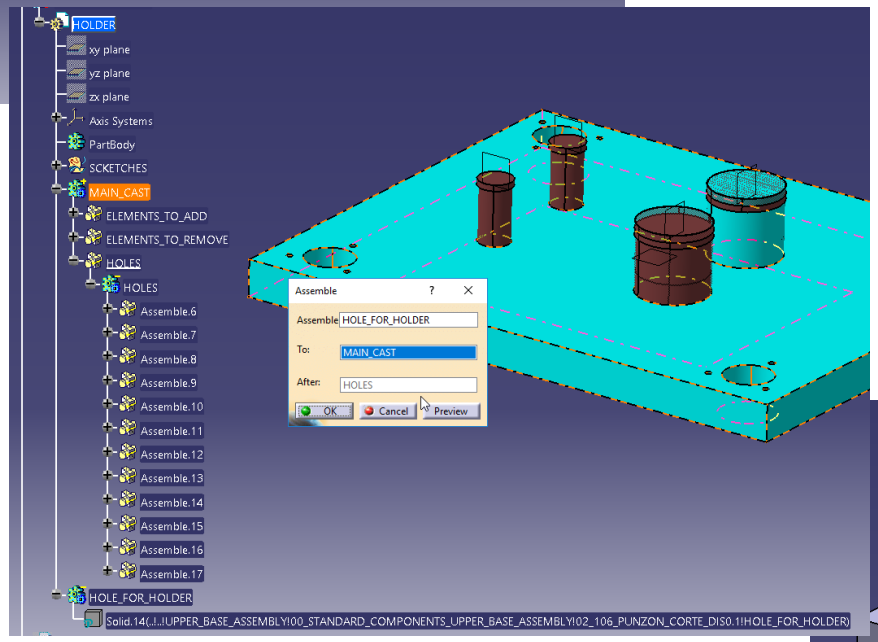


PASTE (special as a result)IN HOLDER
ASSEMBLE (to Main_cast / Holes)

FINISHED
SHAPE

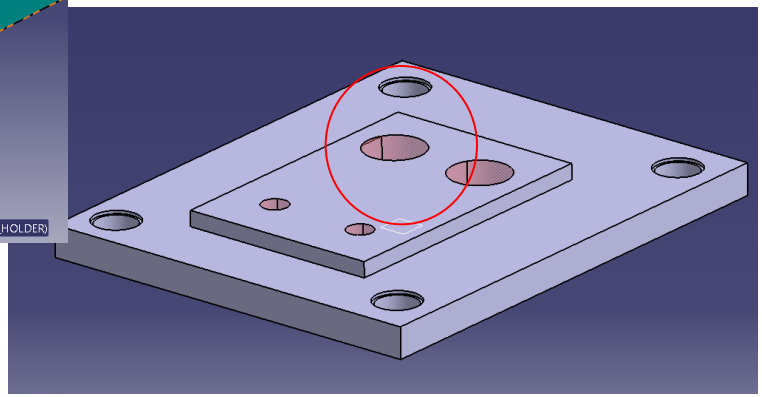

# LOWER DIE SUB-ASSEMBLY

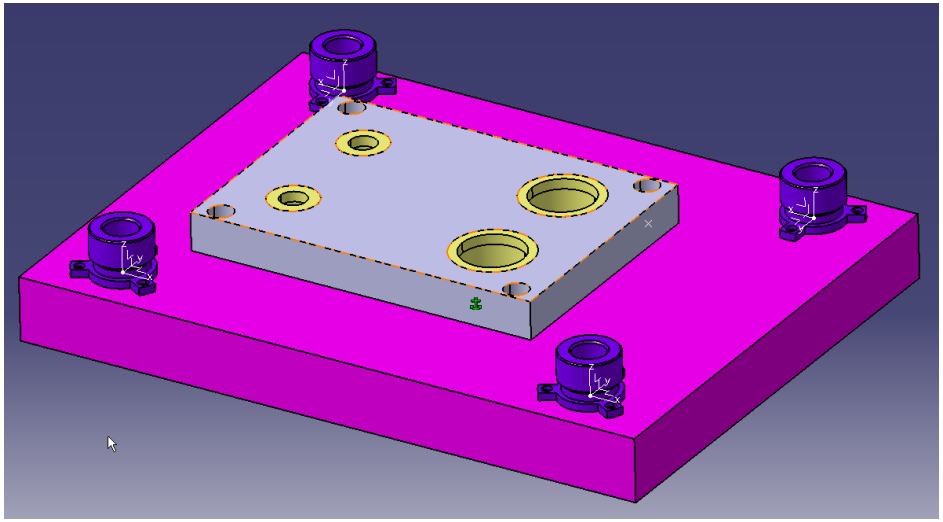

## BOTTOM BASE

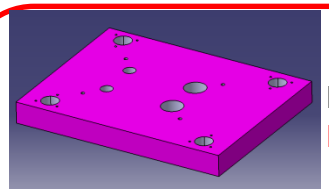

BOTTOM BASE
MAIN CAST PART

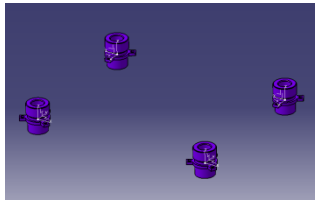

BUSHING GUIDE
STANDARD
COMPONENTS

## MATRIX

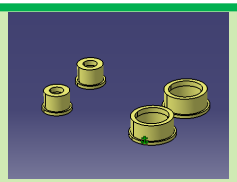

DIE BLOCK
CONSTRUCTION
COMPONENTS

MATRIX
MAIN CAST PART

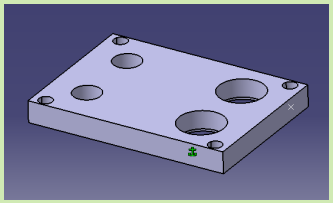

Gestamp

GTI
GESTAMP TECHNOLOGY INSTITUTE

UPenAUTO : 2017-1-ES01-KA203-03858

Erasmus+

# LOWER DIE SUB-ASSEMBLY

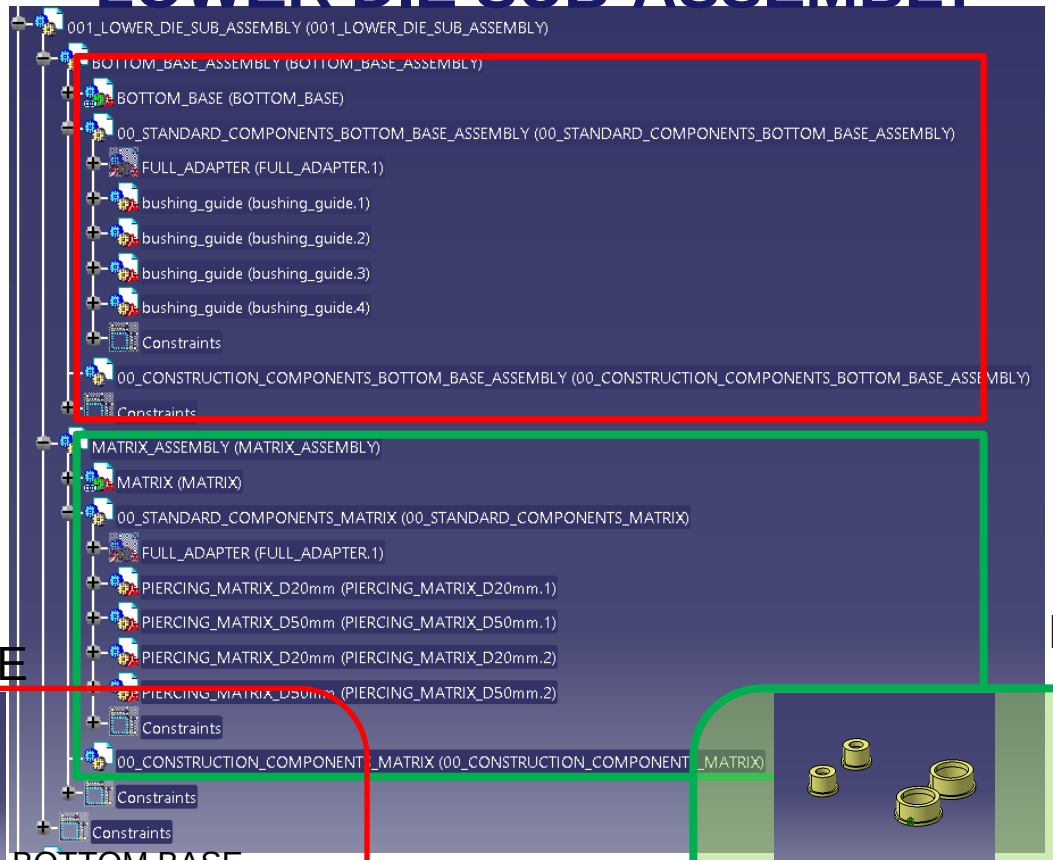


BOTTOM BASE

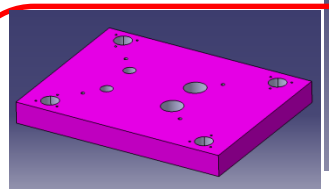

BOTTOM BASE
MAIN CAST PART

BUSHING GUIDE
STANDARD
COMPONENTS

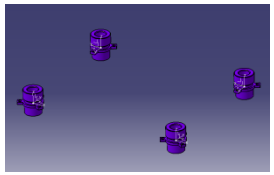

MATRIX



DIE BLOCK
CONSTRUCTION
COMPONENTS

MATRIX
MAIN CAST PART

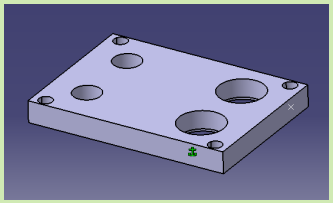

# LOWER DIE SUB-ASSEMBLY

## 1 Bushing Guide

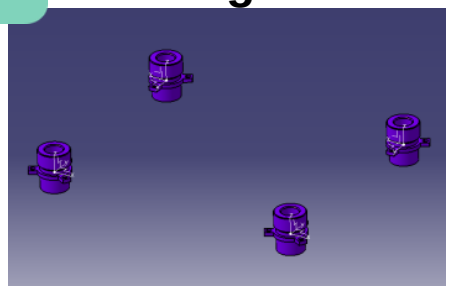

## 2 Bottom base

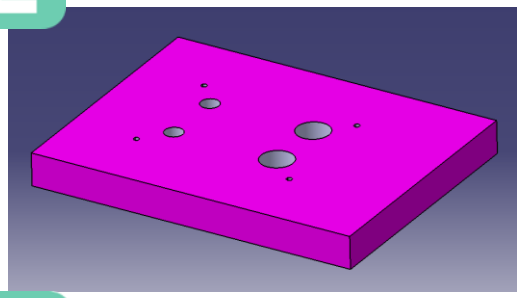

## 3 Insert standard components

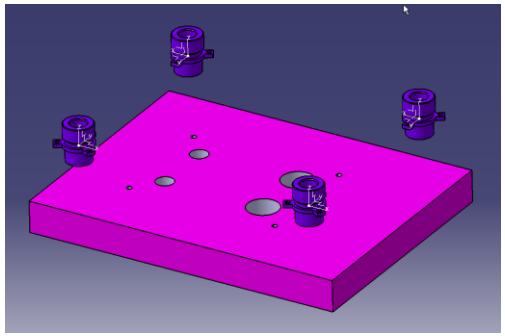

## 4 Constrain elements

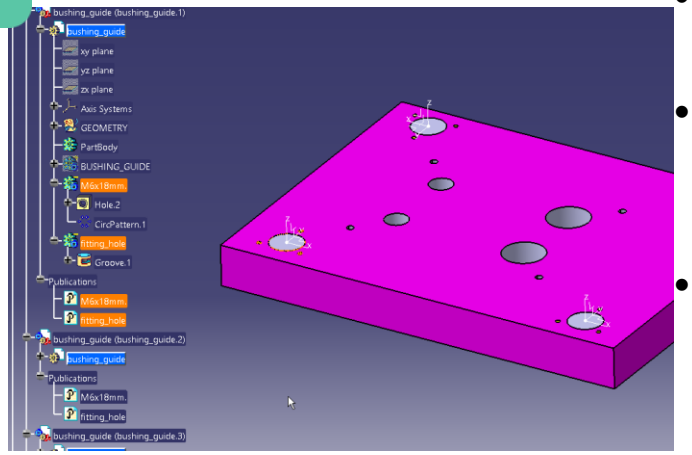


- Guides inserted into Bottom Base
- Constraints the guides with Adapter Position Axes
- Copy and paste the bodies to remove into matrix

## 5 Assemble bodies

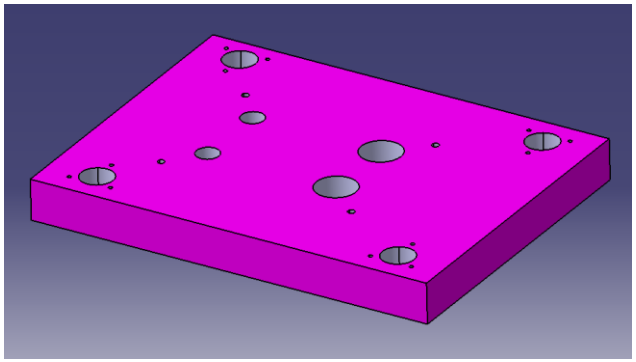

# REAL CASE DIE ASSEMBLY

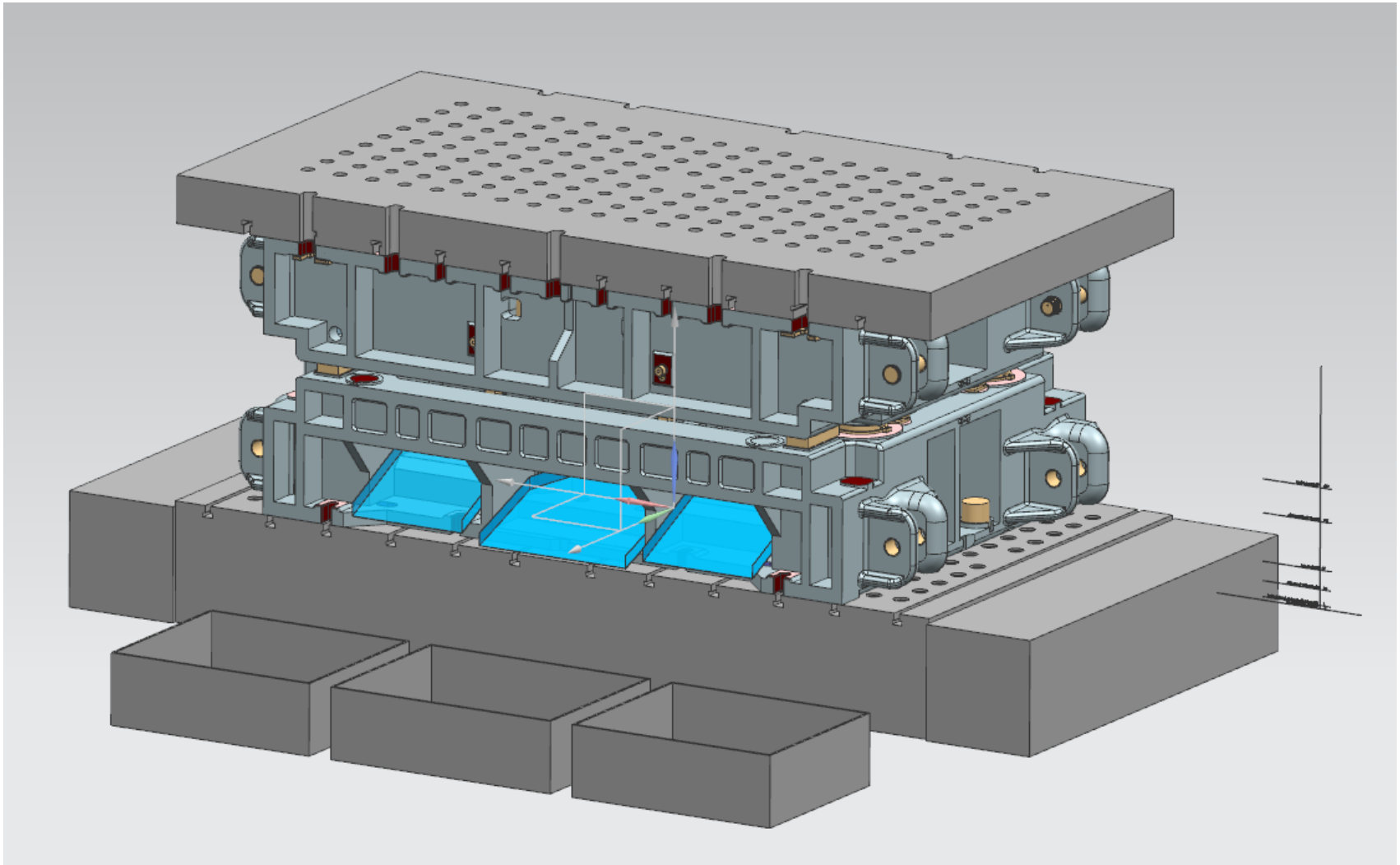

# UPPER DIE SUB-ASSEMBLY

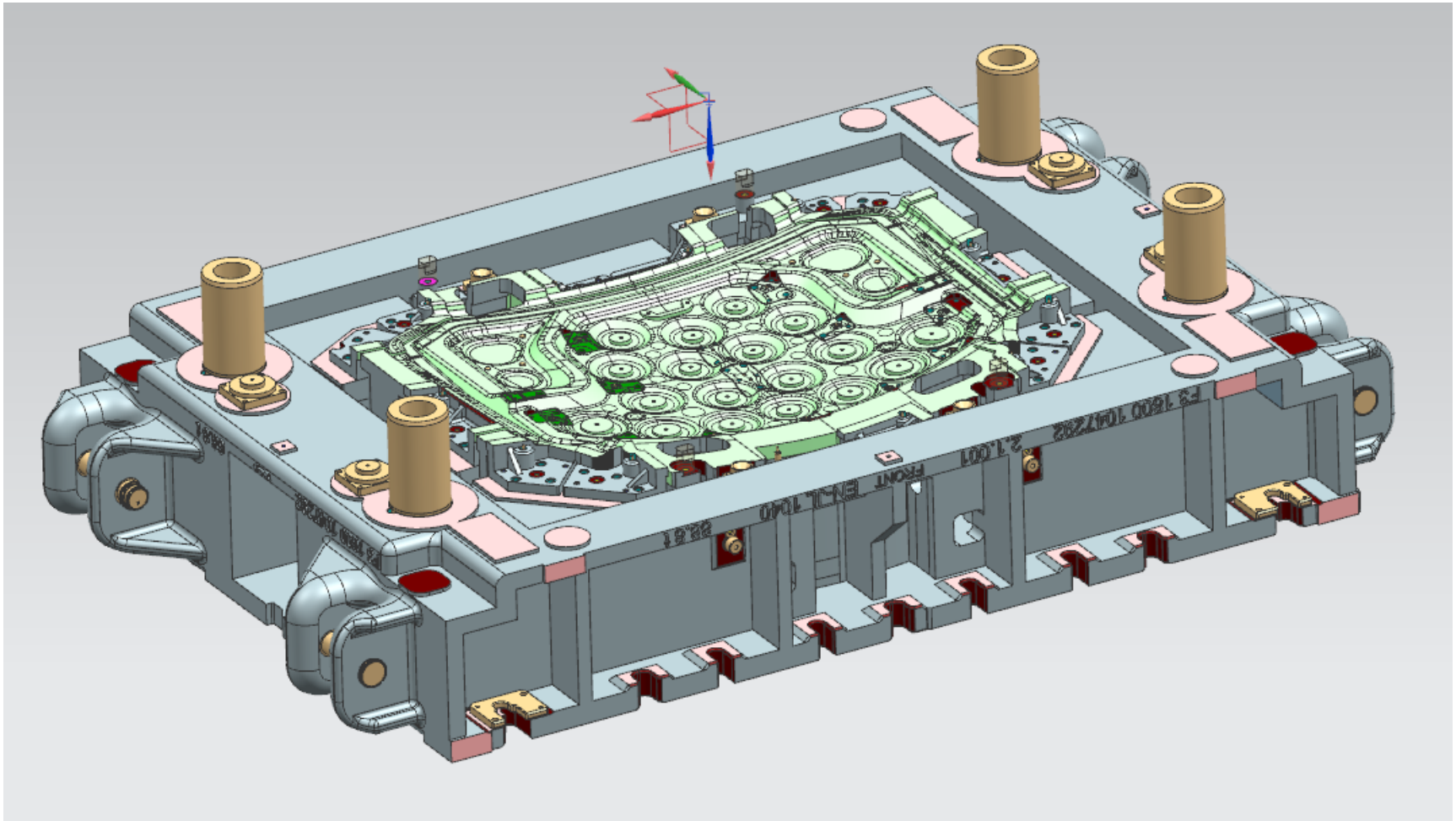

# LOWER DIE SUB-ASSEMBLY

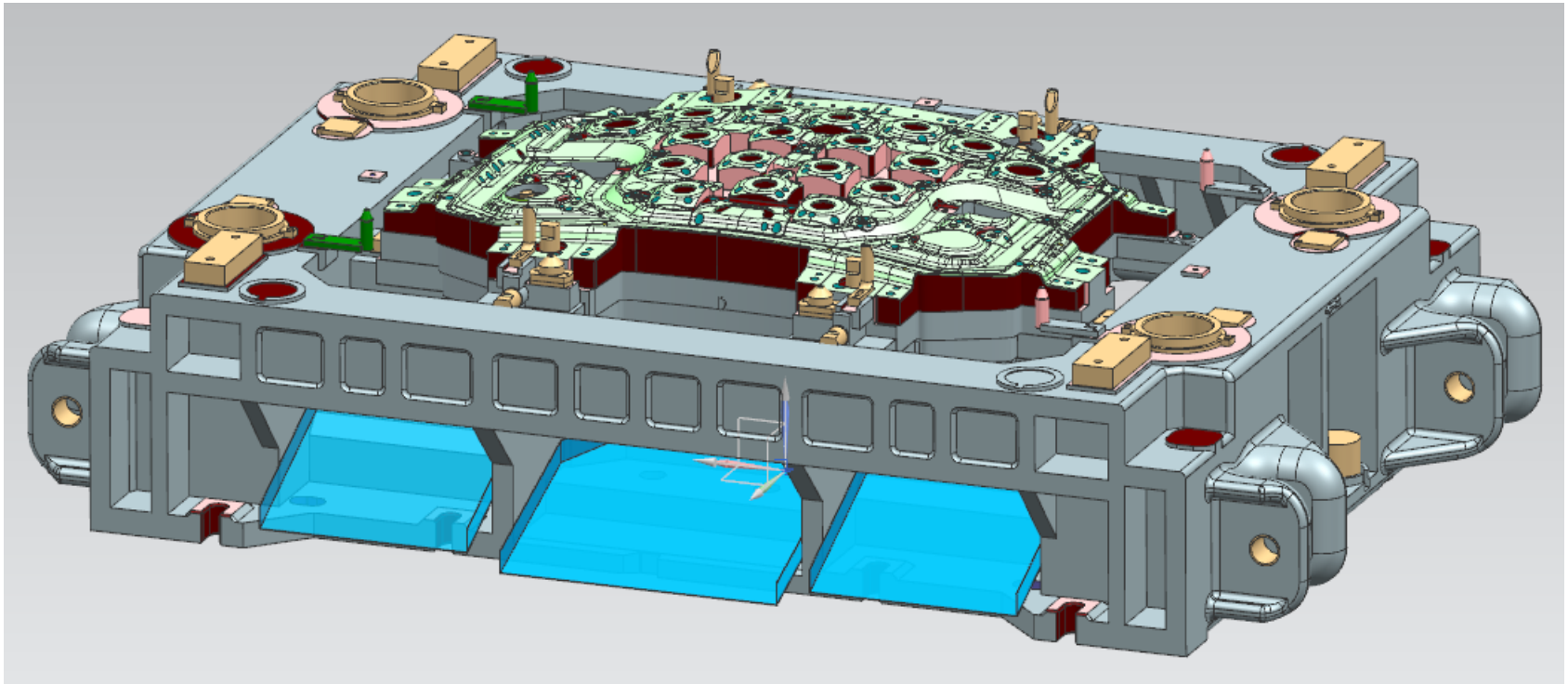

# Assembly Exercises

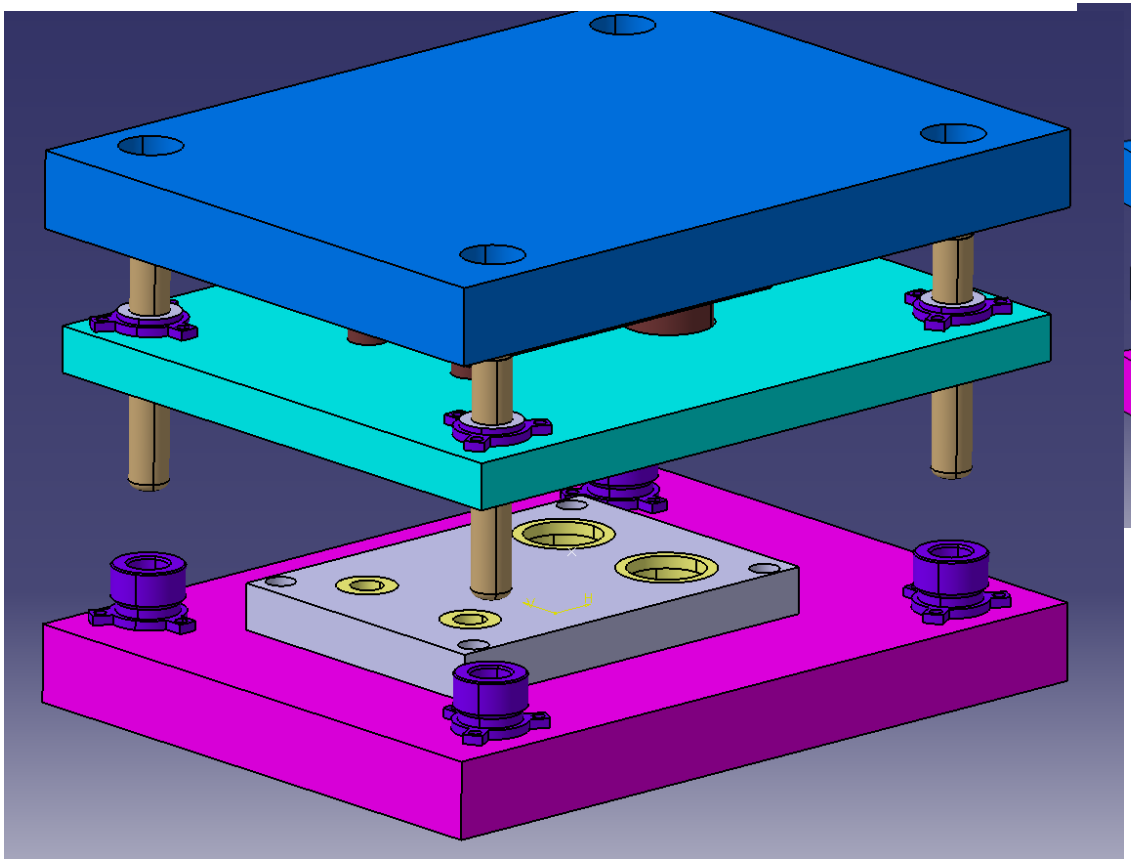

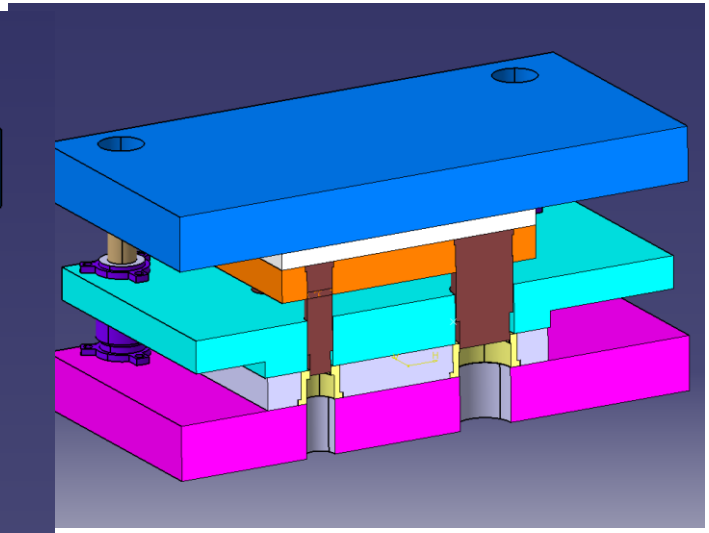

EXERCISE 1

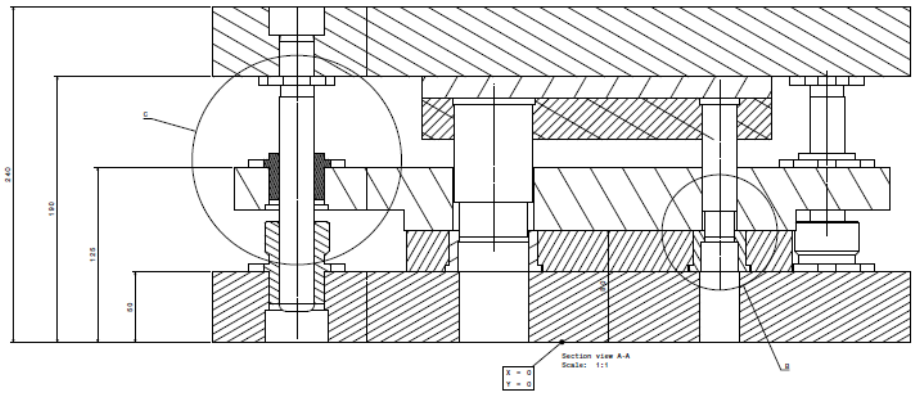


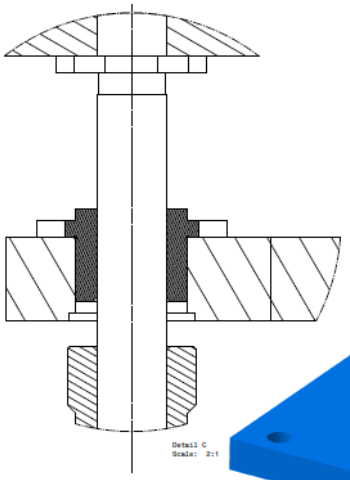


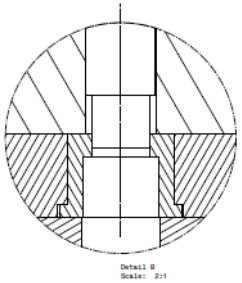


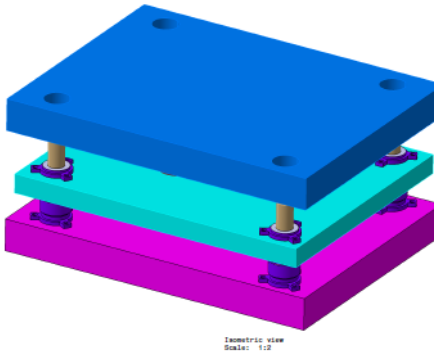


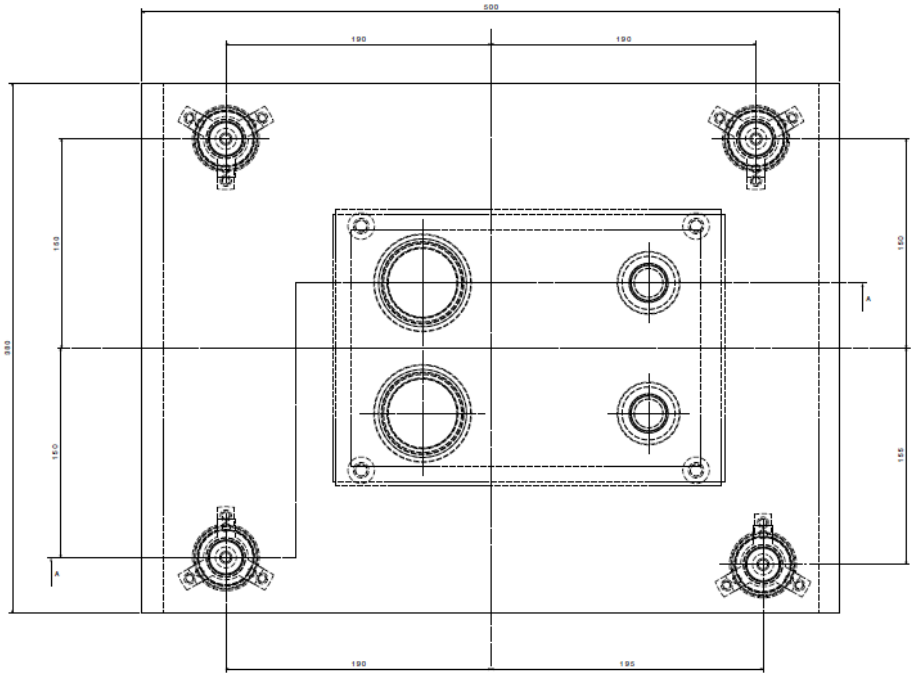


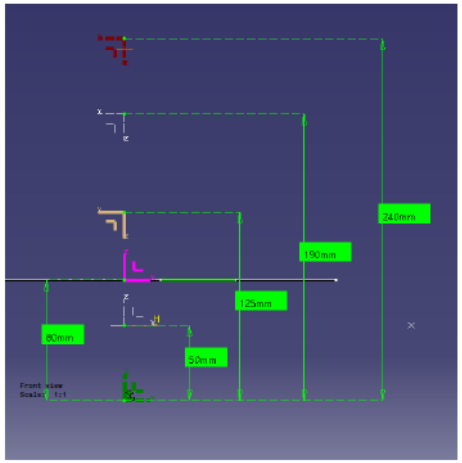




UPenAUTO : 2017-1-ES01-KA203-03858

# EXERCISE 1

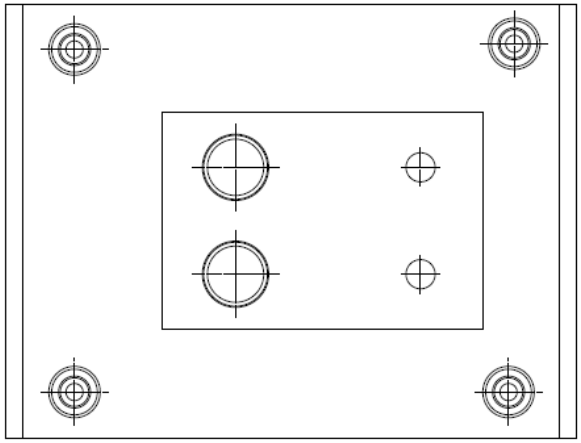

Bottom view
Scale: 4:5

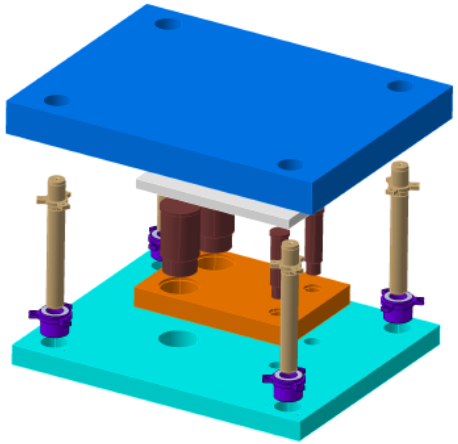

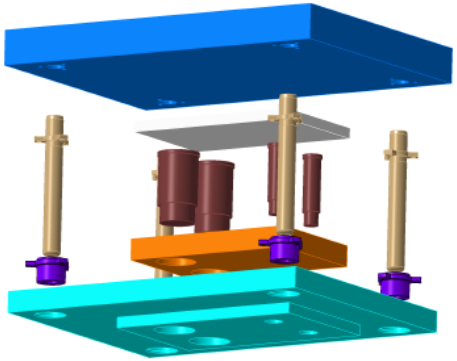

Isometric view
Scale: 1:2

Bill of Material: 001 UPPER DIE SUB ASSEMBLY

| Number | Type | Part Number | Quantity |
|---|---|---|---|
| | Assembly | UPPER BASE ASSEMBLY | 1 |
| | Assembly | HOLDER_ASSEMBLY | 1 |

Bill of Material: UPPER BASE ASSEMBLY

| Number | Type | Part Number | Quantity |
|---|---|---|---|
| 10 | Part | UPPER BASE | 1 |
| | Assembly | DO_STANDARD_COMPONENTS_UPPER BASE_ASSEMBLY | 1 |
| | Assembly | DO_CONSTRUCTION_COMPONENTS_UPPER_BASE_ASSEMBLY | 1 |

Bill of Material: HOLDER ASSEMBLY

| Number | Type | Part Number | Quantity |
|---|---|---|---|
| 16 | Part | HOLDER | 1 |
| | Assembly | DO_STANDARD_COMPONENTS_HOLDER ASSEMBLY | 1 |
| | Part | DO_CONSTRUCTION_COMPONENTS_HOLDER_ASSEMBLY | 1 |

Bill of Material:
DO STANDARD COMPONENTS UPPER BASE ASSEMBLY

| Number | Type | Part Number | Quantity |
|---|---|---|---|
| 1 | Part | FULL_ADAPTER | 1 |
| 11 | Part | COLUMN GUIDE | 4 |
| 12 | Part | DO 40S_PUNZON_CORTE_DISO | 2 |
| 13 | Part | DO 40S_PUNZON_CORTE_DISO | 2 |

Bill of Material:
DO STANDARD COMPONENTS HOLDER ASSEMBLY

| Number | Type | Part Number | Quantity |
|---|---|---|---|
| 1 | Part | FULL_ADAPTER | 1 |
| 17 | Part | bushing guide | 4 |

Bill of Material:
DO CONSTRUCTION COMPONENTS UPPER BASE ASSEMBLY

| Number | Type | Part Number | Quantity |
|---|---|---|---|
| 1 | Part | FULL_ADAPTER | 1 |
| 14 | Part | PUNCH HOLDER | 1 |
| 15 | Part | DOLLY | 1 |

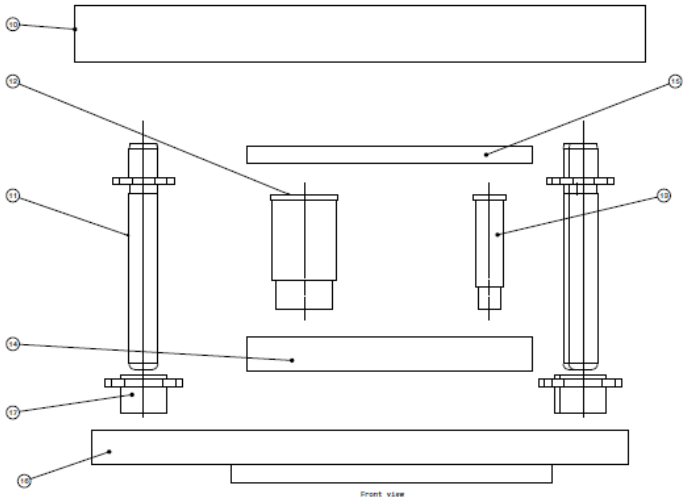

Front view
Scale: 4:5

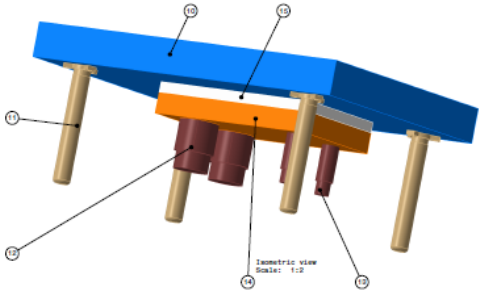

Isometric view
Scale: 1:2

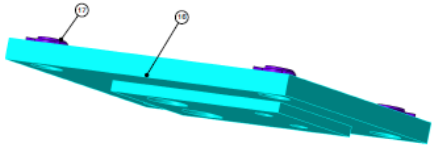

Isometric view
Scale: 1:2

# EXERCISE 1

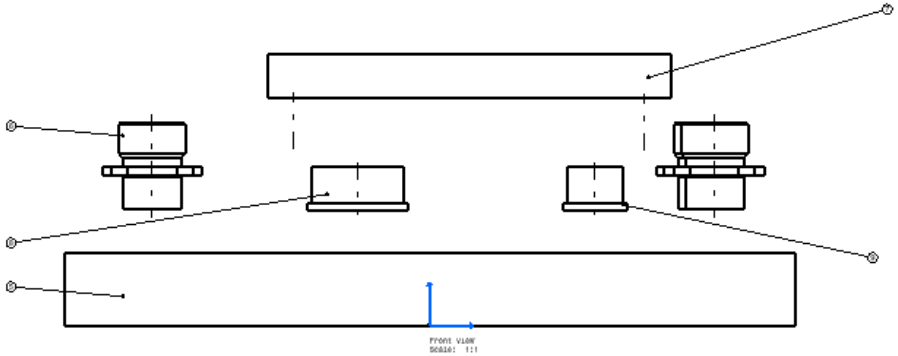


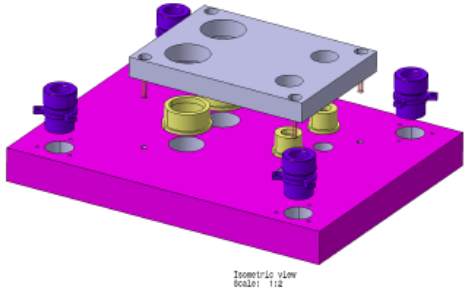


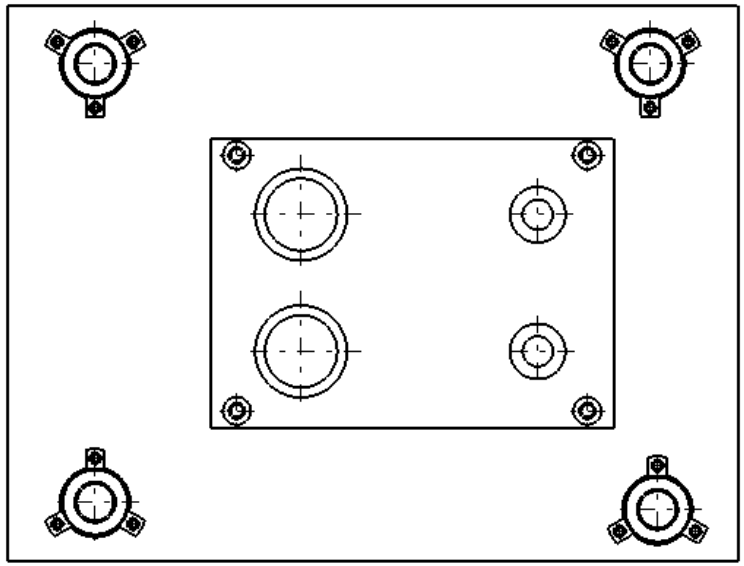


Bill of Material: 001_LOWER_DIE_SUB_ASSEMBLY

| Quantity | Part Number | Type | Nomenclature | Revision |
|---|---|---|---|---|
| 1 | BOTTOM_BASE_ASSEMBLY | Assembly | | |
| 1 | MATRIX_ASSEMBLY | Assembly | | |

Bill of Material: BOTTOM_BASE_ASSEMBLY

| Quantity | Part Number | Type | Nomenclature | Revision |
|---|---|---|---|---|
| 1 | BOTTOM_BASE | Part | | |
| 1 | 00_STANDARD_COMPONENTS_BOTTOM_BASE_ASSEMBLY | Assembly | | |
| 1 | 00_CONSTRUCTION_COMPONENTS_BOTTOM_BASE_ASSEMBLY | Part | | |

Bill of Material: MATRIX_ASSEMBLY

| Quantity | Part Number | Type | Nomenclature | Revision |
|---|---|---|---|---|
| 1 | MATRIX | Part | | |
| 1 | 00_STANDARD_COMPONENTS_MATRIX | Assembly | | |
| 1 | 00_CONSTRUCTION_COMPONENTS_MATRIX | Part | | |

Bill of Material: 00_STANDARD_COMPONENTS_BOTTOM_BASE_ASSEMBLY

| Quantity | Part Number | Type | Nomenclature | Revision |
|---|---|---|---|---|
| 1 | FULL_ADAPTER | Part | | |
| 4 | Bushing_guide | Part | | 2001.74.025+ 2001.74.025 |

Bill of Material: 00_STANDARD_COMPONENTS_MATRIX

| Quantity | Part Number | Type | Nomenclature | Revision |
|---|---|---|---|---|
| 1 | FULL_ADAPTER | Part | | |
| 2 | PIEMCIWO_MATRIX_DECOM# | Part | | |
| 2 | PIEMCIWO_MATRIX_DECOM# | Part | | |

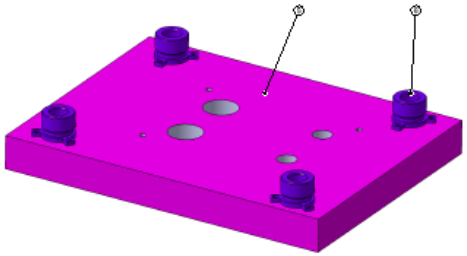


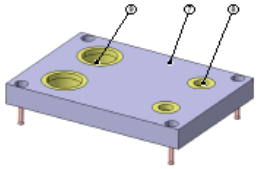

EXERCISE 2

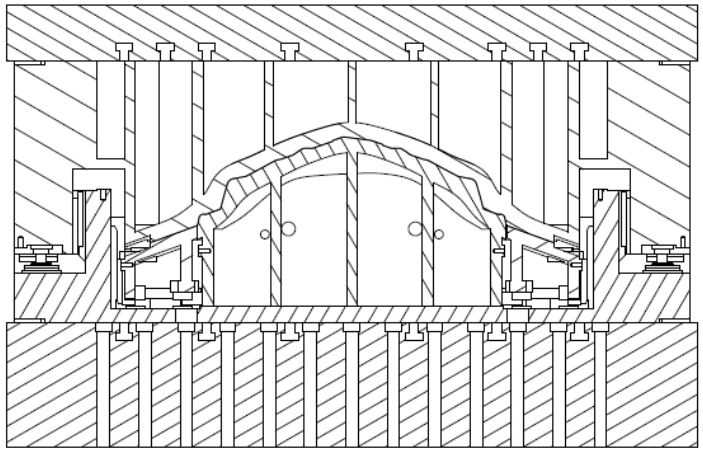

Section view A-A
Scale: 1:10

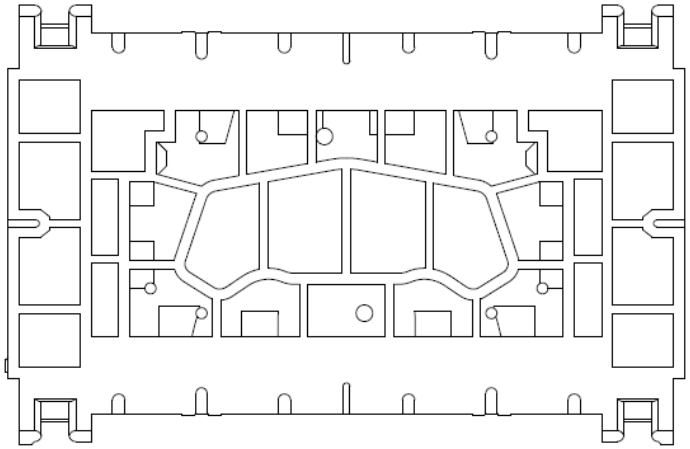

Front view
Scale: 1:10

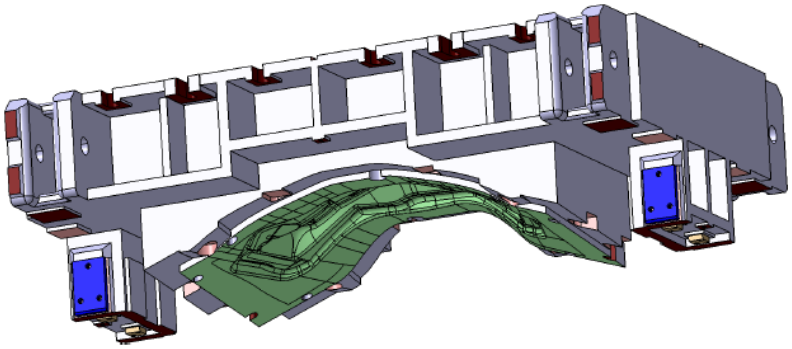

Isometric view
Scale: 1:10

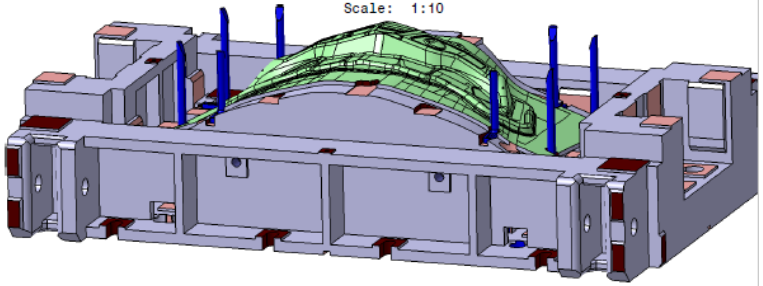

Isometric view
Scale: 1:10

# EXERCISE 2

Bill of Material: 00_000_INPUT_DATA

| Number | Part Number | Quantity | Type |
|---|---|---|---|
| | 00_000_PRESS_ASSEMBLY | 1 | Assembly |
| 1 | OP_20_METHODE_PLAN | 1 | Part |
| 2 | 00_000_ADAPTER | 1 | Part |

Bill of Material: 00_000_LOWER_DIE

| Number | Part Number | Quantity | Type |
|---|---|---|---|
| | 01_000_BOTTOM_BASE_ASSEMBLY | 1 | Assembly |
| | 02_000_PUNCH_ASSEMBLY | 1 | Assembly |
| | 03_000_HOLDER_ASSEMBLY | 1 | Assembly |

Bill of Material: 00_000_UPPER_DIE

| Number | Part Number | Quantity | Type |
|---|---|---|---|
| | 04_000_MATRIX_ASSEMBLY | 1 | Assembly |

Bill of Material: 01_000_BOTTOM_BASE_ASSEMBLY

| Number | Part Number | Quantity | Type |
|---|---|---|---|
| 5 | 01_001_BOTTOM_BASE | 1 | Part |
| | 01_000_STANDARD_ELEMENTS_BOTTOM_BASE | 1 | Assembly |
| | 01_000_CONSTRUCTION_COMPONENTS_BOTTOM_BASE | 1 | Part |

Bill of Material: 04_000_MATRIX_ASSEMBLY

| Number | Part Number | Quantity | Type |
|---|---|---|---|
| 15 | 04_001_MATRIX | 1 | Part |
| | 04_000_STANDARD_ELEMENTS_MATRIX_ASSEMBLY | 1 | Assembly |
| | 04_000_CONSTRUCTION_COMPONENTS_MATRIX_ASSEMBLY | 1 | Assembly |

Bill of Material: 02_000_PUNCH_ASSEMBLY

| Number | Part Number | Quantity | Type |
|---|---|---|---|
| 8 | 02_001_PUNCH | 1 | Part |
| | 02_000_STANDARD_ELEMENTS_PUNCH_ASSEMBLY | 1 | Part |
| | 02_000_CONSTRUCTION_ELEMENTS_PUNCH_ASSEMBLY | 1 | Part |

Bill of Material: 03_000_HOLDER_ASSEMBLY

| Number | Part Number | Quantity | Type |
|---|---|---|---|
| 9 | 03_001_HOLDER | 1 | Part |
| | 03_000_STANDARD_ELEMENTS_HOLDER_ASSEMBLY | 1 | Assembly |
| | 03_000_CONSTRUCTION_COMPONENTS_HOLDER_ASSEMBLY | 1 | Assembly |

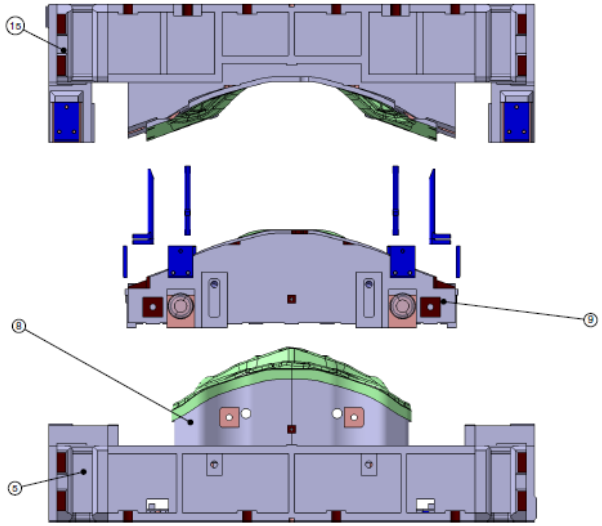


Front view
Scale: 1:10

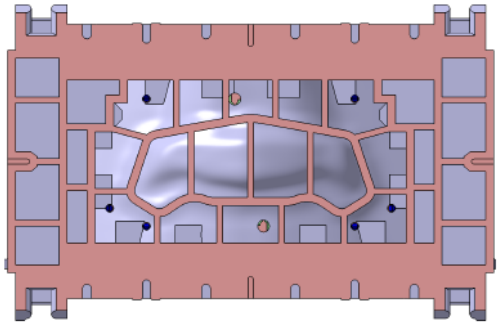

Top view
Scale: 1:10

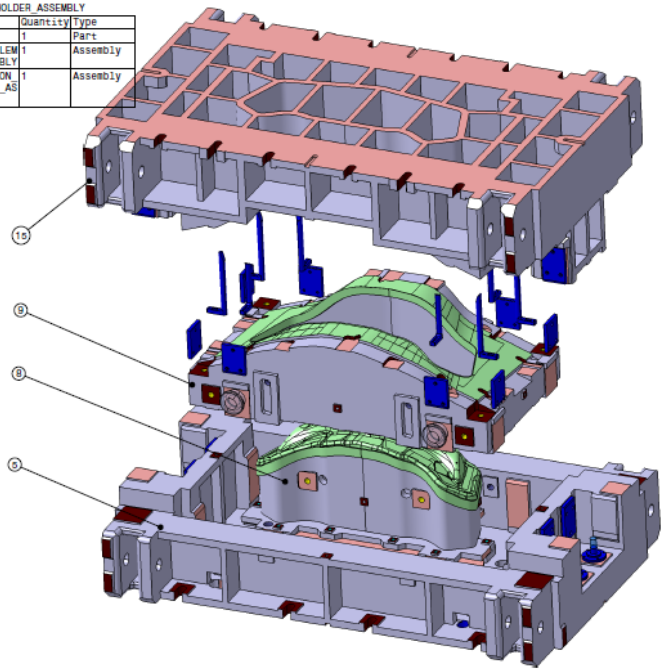


Isometric view
Scale: 1:10

# Advanced design with CATIA V5 (90h)

**Practical Exercise E1**

**UPenAUTO : 2017-1-ES01-KA203-03858**

Erasmus+

## UPenAUTO: UPSKILLED ENGINEERING PROFILES FOR THE AUTOMOTIVE SECTOR AND UPTAKE OF ALTERNATE SCHEME IN EUROPE´S HIGHER EDUCATION.

Gestamp

GTI
GESTAMP TECHNOLOGY INSTITUTE

FABRIKAZIOAREN ZENTRO AURRERATUA
CENTRO AVANZADO DE FABRICACIÓN

somorrostro
centro de formación / irakas-gunea

UNIVERSITATEA POLITEHNICA

# E1.- Exercise

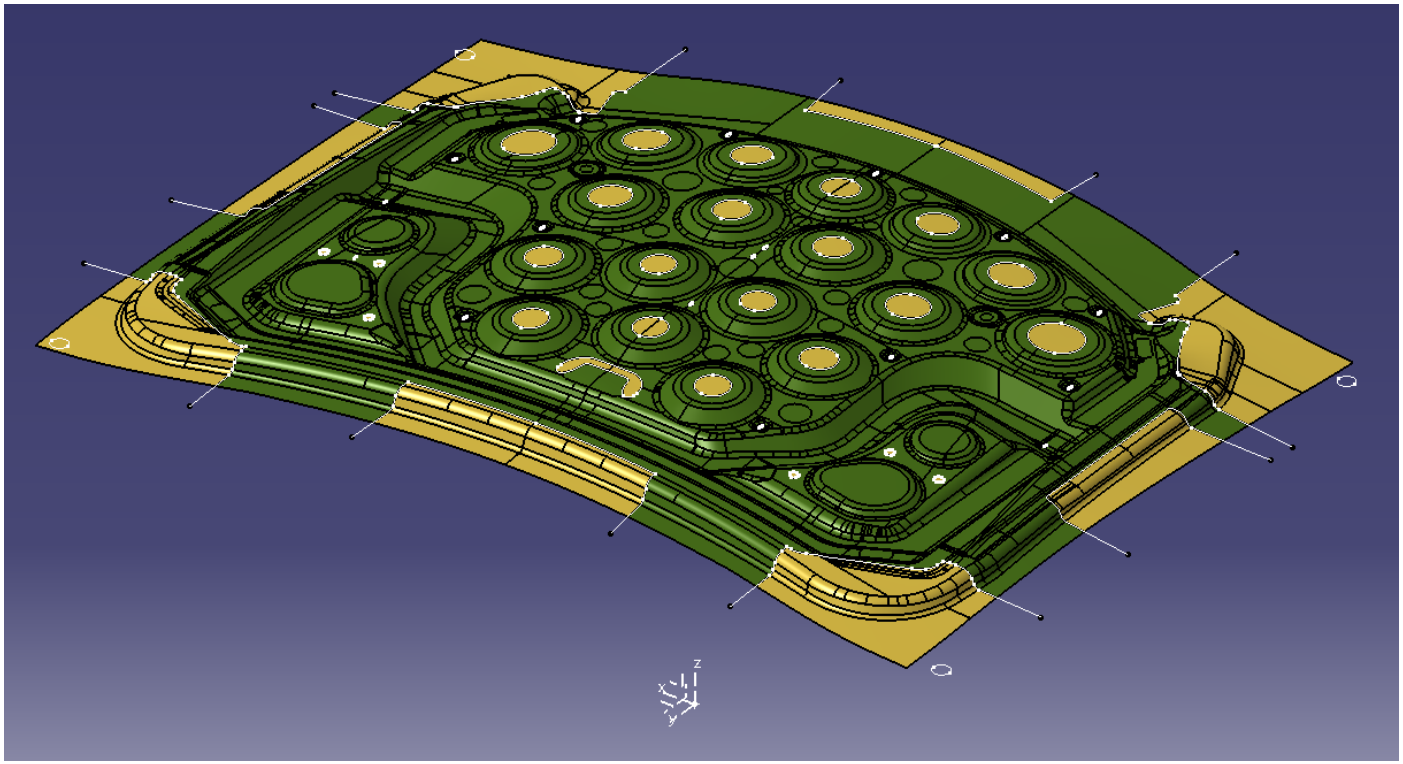

# QUALIFICATION CRITERIA

- Correction of exercise E1 :
  - Parts created : 5 points
    - Punch : 2 points
    - Holder : 2 points
    - 4 Blades : 0,5point each one
  - Tree structure correct : 2,5 points
  - Part structure correct : 2,5 points